CDX



The CDX explosion proof vibrators have been designed for use in industrial processes with a potentially explosive atmosphere.

The enclosure of the CDX vibrators is characterised by increased thickness and joints to prevent the transmission of an internal explosion to the surrounding area.

The CDX series is characterised and enhanced by many different certifications, depending on the vibrator model, as shown in these pages.

Technical features

Power supply
Three-phase voltage from 24V to 690V (limit at 600V for UL and CSA certifications), 50Hz or 60Hz, or single-phase 100-130V 60Hz and 200-240V 50Hz; suitable for use with a PWM inverter from 20Hz to the base frequency with constant torque load profile.

Polarity
2, 4, 6 and 8 poles.

Conformity with Standards and Regulations
ATEX Directive 2014/34/UE;
EN/IEC 60079-0, EN/IEC 60079-1,
EN/IEC 60079-31, UL 674-886, CSA C22.2.
See also tables.

Controls
The components that affect protection are 100% accurately controlled and recorded with traceability.

Functioning
Continual service (S1) at maximum declared centrifugal force and electric power. Intermittent services are also possible depending on the type of vibrator and the operating conditions. For detailed information, contact our technical assistance office.

Centrifugal force
Range extended to 22400 kgf. (220 kN), with centrifugal force adjustable from 0 to 100%.

Mechanical protection
IP66 according to IEC/EN 60529.

Protection against mechanical impacts
IK 08 according to IEC/EN 62262.

Insulation class
Class F (155°C).

Tropicalization
Standard on all vibrators, with vacuum encapsulation up to size 35, with “drop by drop” trickle system for larger sizes.

Ambient temperature
From -20°C to +40°C. See also approval table for other ambient temperatures.

Vibrator thermal protection
With thermal protector at 130°C for the entire CDX range, or on request with PTC thermistors rated heat detectors 130°C.

Fixing of the vibrator
In all positions and therefore without restriction.

Lubrication
All vibrators are lubricated in the factory and do not require further lubrication at start-up.

Terminal box
Large terminal box to facilitate electrical connection. The terminal cover, with increased thickness, is constructed to contain internal explosions. Special shaped terminals allow to fix the power supply cable, protecting it from loosening.

Electric motor
Three-phase and single-phase asynchronous type. Insulated windings using vacuum encapsulating up to size 35; using the “drop by drop” trickle system with Class H resin for the larger sizes. The rotor is die cast aluminium.

Casing
In high-tensile aluminium alloy up to size 30, in spheroidal cast iron for larger sizes.

Bearing flange
In spheroidal or grey cast iron.
The geometry of the flange transmits the load to the casing uniformly.

Bearings
Custom made with particular geometry, especially designed for Italvibras, suitable to support both high radial and axial loads.

Motor shaft
In treated steel alloy (Isothermic hardening) resistant to stress.

Eccentric weights
Allow adjustment of the centrifugal force. This adjustment is realized by a graduated scale, which expresses the centrifugal force as a percentage of the maximum centrifugal force.
A patented system, called ARS, prevents adjustment errors.

The CDX-G series, obtained by the CDX frame sizes 35 to 80 series, is specifically designed for use in industrial processes in a potentially explosive gas atmosphere, among other applications they are commonly used on oil and gas drilling rigs. The CDX-G series has weight covers and terminal box covers with special protection coatings; weight covers can be supplied in stainless steel upon request.





Approvals	series CDX	series CDX-G
c UL us	Class I, Groups CD. Class II, Groups EFG. Temp. Class T4 (135°C) (Amb. Temp. -20°C÷+40°C)	Class I, Groups CD. Temp. Class T2C (230°C) (Amb. Temp. -20°C÷+60°C)
Ex	ATEX II2G Ex d IIB 120°C Gb II 2D Ex tb IIIC T120°C Db (Amb. Temp. -20°C÷+40°C)	ATEX II2G Ex d IIB 160°C Gb (Amb. Temp. -20°C÷+60°C)
IECEx	Ex d IIB 120°C Gb Ex tb IIIC T120°C Db (Amb. Temp.-20°C÷+40°C)	Ex d IIB 160°C Gb (Amb. Temp. -20°C÷+60°C)
Notes	Version with Amb. Temp. -20°C to +60°C and other temperature classes is available.	Version with cULus temperature class T3C (160°c) with thermal protection is available.

Weight covers
In aluminium alloy.
Special coatings provided on CDX-G types.
On request available also in stainless steel for CDX-G types.

Painting
Electrostatic surface treatment based on polymerised epoxy polyester powder in oven at 200°C. Tested in salt spray for 500 hours.

Other features
The CDX series is supplied without cable gland and with NPT threaded conduit opening.

Other mounting bolt patterns are available. For further details please contact sales offices at Italvibras.
The technical data and models listed in this catalogue are not binding. Italvibras reserves the right to modify them without prior notice.

Certifications

CE
Compliance with the applicable European Union directives.

c UL us
Certificate: E129825
Class I, Groups CD
Class II, Groups EFG
Temp. Class T4 (135°C)
UL Standard N°674-886, CSA C22.2

Ex
Certificate: DEMKO 07 ATEX 0612032X
II2D Ex tb IIIC T120°C Db
II2G Ex d IIB 120°C Gb
ATEX Directive 2014/34/UE
EN 60079-0, EN 60079-1, EN 60079-31

IECEx
Certificate: IECEx UL 09.0034X
Ex tb IIIC T120°C Db
Ex d IIB 120°C Gb
IEC 60079-0, IEC 60079-1, IEC 60079-31

c SP us
Certificate: LR 100948
Class I, Groups CD
Class II, Groups EFG
Temp. Class T4 (135°C)
CSA Standard C22.2 , UL N°674-886

EAC
Certification for Eurasian Customs Union
N° TC RU C-IT.ГБ08.B.02190

KCs
KOSHA Korea
Certificati n° 11-AV4BO-0353/4/5/6/7/8/60
Ex d IIB 120°C
Ex td A21 IP66 T120°C

CDX

2 poles - 3.000/3.600 rpm

Three-phase

DESCRIPTION			Certifications	MECHANICAL SPECIFICATIONS								ELECTRICAL SPECIFICATIONS							
				Static moment* kgmm		Centrifugal force kg		Centrifugal force kN		Weight kg		Max input power W		Power rating W		Max. current A		Ia/In	
Code	Type	SIZE		50Hz	60Hz	50Hz	60Hz	50Hz	60Hz	50Hz	60Hz	50Hz	60Hz	50Hz	60Hz	400V 50Hz	460V 60Hz	50Hz	60Hz
600384	**CDX 3/300-G/D**	10	•	30,0	22,5	**302**	**326**	**2,96**	**3,20**	11,5	11,0	260	270	180	190	0,60	0,50	3,47	4,20
600385	**CDX 3/500-G/D**	20	•	58,0	34,8	**584**	**504**	**5,72**	**4,94**	17,0	16,0	450	500	330	390	0,80	0,75	4,21	4,80
600387	**CDX 3/800-G/D**	30	•	74,5	55,9	**750**	**810**	**7,35**	**7,94**	23,3	22,4	650	685	500	520	1,10	1,00	3,83	6,00
600389	**CDX 3/1100-G/D**	35	• • • •	110	73,0	**1105**	**1061**	**10,8**	**10,4**	34,0	33,0	600	710	480	550	0,90	0,93	4,78	4,96
600437	**CDX 3/1500-G/D**	50	• • • •	161	111	**1625**	**1602**	**15,9**	**17,7**	53,9	51,4	1000	1200	850	925	1,62	1,72	6,00	6,32
600317	**CDX 3/2100-G/D**	50	• • • •	209	144	**2114**	**2080**	**20,7**	**20,4**	59,8	58,5	1000	1260	900	1095	1,71	1,85	6,95	7,19
600320	**CDX 3/2300-G/D**	60	• • • •	222	159	**2236**	**2300**	**21,9**	**22,5**	82,5	79,5	2000	2200	1500	1606	3,23	3,20	7,47	8,60
600323	**CDX 3/3200-G/D**	70	• • • •	344	215	**3457**	**3112**	**33,9**	**30,5**	114	110	3100	3250	2570	2570	5,23	5,00	6,37	8,00
600486	**CDX 3/4700-G/D**	80	• • • •	469	329	**4710**	**4760**	**46,2**	**46,7**	149	144	4500	4500	3680	3680	7,13	6,60	6,53	7,00

Single-phase

			Certifications	Static moment* kgmm		Centrifugal force kg		Centrifugal force kN		Weight kg		Max input power W		Power rating W		Max. current A		Ia/In	
Code	Type	SIZE		50Hz	60Hz	50Hz	60Hz	50Hz	60Hz	50Hz	60Hz	50Hz	60Hz	50Hz	60Hz	220V 50Hz	115V 60Hz	50Hz	60Hz
600384	**CDX 3/300-G/D**	10	•	30,0	22,5	**302**	**326**	**2,96**	**3,20**	11,5	11,0	280	280	180	200	1,25	2,40	2,48	3,52
600385	**CDX 3/500-G/D**	20	•	58,0	34,8	**584**	**504**	**5,72**	**4,94**	17,0	16,0	500	500	340	350	2,30	4,50	3,35	4,22
600387	**CDX 3/800-G/D**	30	•	74,5	55,9	**750**	**810**	**7,35**	**7,94**	23,3	22,4	700	750	450	500	3,25	7,00	4,00	4,14

4 poles - 1.500/1.800 rpm

Three-phase

DESCRIPTION			Certifications	MECHANICAL SPECIFICATIONS								ELECTRICAL SPECIFICATIONS							
				Static moment* kgmm		Centrifugal force kg		Centrifugal force kN		Weight kg		Max input power W		Power rating W		Max. current A		Ia/In	
Code	Type	SIZE		50Hz	60Hz	50Hz	60Hz	50Hz	60Hz	50Hz	60Hz	50Hz	60Hz	50Hz	60Hz	400V 50Hz	460V 60Hz	50Hz	60Hz
601409	**CDX 15/200-G/D**	10	•	84,2	58,8	**213**	**214**	**2,09**	**2,10**	14,0	13,0	170	170	95	95	0,41	0,40	2,34	2,75
601410	**CDX 15/400-G/D**	20	•	163	113	**412**	**411**	**4,04**	**4,03**	21,4	20,0	300	350	215	275	0,60	0,60	3,33	3,50
601411	**CDX 15/550-G/D**	20	•	219	163	**552**	**592**	**5,42**	**5,81**	22,8	21,4	300	350	215	275	0,60	0,60	3,33	3,50
601412	**CDX 15/700-G/D**	30	•	286	209	**720**	**760**	**7,06**	**7,46**	30,3	29,0	525	665	380	490	0,92	0,98	3,48	3,43
601413	**CDX 15/1100-G/D**	35	• • • •	415	271	**1045**	**982**	**10,3**	**9,63**	46,0	41,5	520	660	369	442	0,81	0,88	4,65	4,84
601424	**CDX 15/1410-G/D**	50	• • • •	561	400	**1413**	**1449**	**13,9**	**14,2**	63,4	58,8	750	1000	548	740	1,35	1,50	5,59	5,60
601328	**CDX 15/1710-G/D**	50	• • • •	715	485	**1798**	**1757**	**17,6**	**17,2**	67,8	65,3	1050	1300	882	1105	1,81	1,90	5,09	5,46
601358	**CDX 15/2000-G/D**	50	• • • •	817	561	**2054**	**2033**	**20,1**	**19,9**	72,8	66,8	1050	1300	882	1105	1,81	1,90	5,09	5,46
601329	**CDX 15/2410-G/D**	60	• • • •	962	674	**2420**	**2444**	**23,7**	**24,0**	98,0	92,0	1500	1650	1305	1485	2,95	2,90	7,80	7,76
601330	**CDX 15/3810-G/D**	70	• • • •	1526	1034	**3840**	**3744**	**37,7**	**36,7**	139	134	2270	2250	1839	1845	3,80	3,50	6,84	8,09
601623	**CDX 15/4300-G/D**	70	• • • •	1720	1173	**4326**	**4250**	**42,4**	**41,7**	143	137	2270	2250	1839	1845	3,80	3,50	6,84	8,09
601487	**CDX 15/5010-G/D**	80	• • • •	1990	1364	**5007**	**4941**	**49,1**	**48,5**	172	165	2800	2800	2100	2100	4,75	4,40	6,74	7,20

Single-phase

			Certifications	Static moment* kgmm		Centrifugal force kg		Centrifugal force kN		Weight kg		Max input power W		Power rating W		Max. current A		Ia/In	
Code	Type	SIZE		50Hz	60Hz	50Hz	60Hz	50Hz	60Hz	50Hz	60Hz	50Hz	60Hz	50Hz	60Hz	220V 50Hz	115V 60Hz	50Hz	60Hz
601409	**CDX 15/200-G/D**	10	•	84,2	58,8	**213**	**214**	**2,09**	**2,10**	14,0	13,0	210	230	110	120	1,00	2,00	1,50	1,85
601410	**CDX 15/400-G/D**	20	•	163	113	**412**	**411**	**4,04**	**4,03**	21,4	20,0	240	320	120	180	1,20	2,80	2,50	2,50
601401	**CDX 15/550-G/D**	20	•	219	163	**552**	**592**	**5,42**	**5,81**	22,8	21,4	240	320	120	180	1,20	2,80	2,50	2,50
601412	**CDX 15/700-G/D**	30	•	286	209	**720**	**760**	**7,06**	**7,46**	30,3	29,0	450	550	240	300	2,15	5,15	5,44	3,63

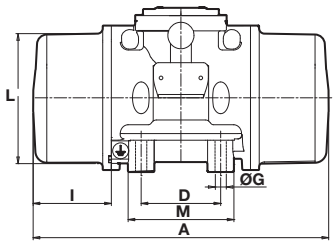

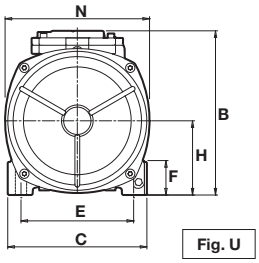

Fig. U

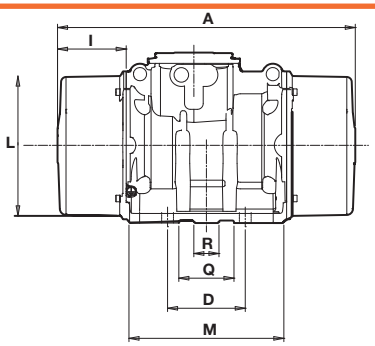

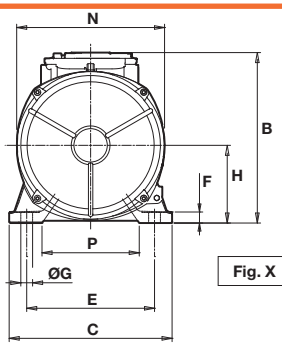

Fig. X

DIMENSIONAL SPECIFICATIONS (mm)

Type	Fig.	A	B	C	Holes D	Holes E	Holes ØG	Holes N°	F	H	I	L	M	N	P	Q	R	Capacitor (µF) 220V 50Hz	Capacitor (µF) 115V 60Hz	Cable entry
CDX 3/300-G/D	**U**	255	191	152	**90**	**125**	**13**	**4**	28	77,5	54	130	128	150	-	-	-	-	-	NPT 1/2”
CDX 3/500-G/D	**U**	288	218	167	**105**	**140**	**13**	**4**	30	90	65	150	140	175	-	-	-	-	-	NPT 1/2”
CDX 3/800-G/D	**U**	314	231	205	**120**	**170**	**17**	**4**	45	102	66	177	162	200	-	-	-	-	-	NPT 1/2”
CDX 3/1100-G/D	**U**	446	249	210	**120**	**170**	**17**	**4**	52	112	118	192	160	218	-	-	-	-	-	NPT 3/4”
CDX 3/1500-G/D	**X**	520	279	235	**140**	**190**	**22**	**4**	18	116	134	210	246	225	140	80	-	-	-	NPT 3/4”
CDX 3/2100-G/D	**X**	520	279	235	**140**	**190**	**22**	**4**	18	116	134	210	246	225	140	80	-	-	-	NPT 3/4”
CDX 3/2300-G/D	**X**	572	312	275	**155**	**225**	**22**	**4**	22	135	146	239	274	253	169	105	50	-	-	NPT 3/4”
CDX 3/3200-G/D	**X**	594	343	325	**155**	**255**	**23,5**	**4**	22	155	137	279	314	295	194	110	50	-	-	NPT 3/4”
CDX 3/4700-G/D	**X**	638	359	355	**180**	**280**	**26**	**4**	22	165	154	303	320	320	198	120	50	-	-	NPT 3/4”

Type	Fig.	A	B	C	Holes D	Holes E	Holes ØG	Holes N°	F	H	I	L	M	N	P	Q	R	Capacitor (µF) 220V 50Hz	Capacitor (µF) 115V 60Hz	Cable entry
CDX 3/300-G/D	**U**	255	191	152	**90**	**125**	**13**	**4**	28	77,5	54	130	128	50	-	-	-	16	25	NPT 1/2”
CDX 3/500-G/D	**U**	288	218	167	**105**	**140**	**13**	**4**	30	90	65	150	140	175	-	-	-	12,5	50	NPT 1/2”
CDX 3/800-G/D	**U**	314	231	205	**120**	**170**	**17**	**4**	45	102	66	177	162	200	-	-	-	25	90	NPT 1/2”

DIMENSIONAL SPECIFICATIONS (mm)

Type	Fig.	A	B	C	Holes D	Holes E	Holes ØG	Holes N°	F	H	I	L	M	N	P	Q	R	Capacitor (µF) 220V 50Hz	Capacitor (µF) 115V 60Hz	Cable entry
CDX 15/200-G/D	**U**	301	191	152	**90**	**125**	**13**	**4**	28	77,5	77	130	128	150	-	-	-	-	-	NPT 1/2”
CDX 15/400-G/D	**U**	350	218	167	**105**	**140**	**13**	**4**	30	90	96	150	140	175	-	-	-	-	-	NPT 1/2”
CDX 15/550-G/D	**U**	392	218	167	**105**	**140**	**13**	**4**	30	90	117	150	140	175	-	-	-			NPT 1/2”
CDX 15/700-G/D	**U**	394	231	205	**120**	**170**	**17**	**4**	45	102	106	177	162	200	-	-	-	-	-	NPT 1/2”
CDX 15/1100-G/D	**U**	446	249	210	**120**	**170**	**17**	**4**	52	112	118	192	160	218	-	-	-	-	-	NPT 3/4”
CDX 15/1410-G/D	**X**	520	279	235	**140**	**190**	**22**	**4**	18	116	134	210	246	225	140	80	-	-	-	NPT 3/4”
CDX 15/1710-G/D	**X**	520	279	235	**140**	**190**	**22**	**4**	18	116	134	210	246	225	140	80	-	-	-	NPT 3/4”
CDX 15/2000-G/D	**X**	594(50Hz) 520(60Hz)	279	235	**140**	**190**	**22**	**4**	18	116	171(50Hz) 134(60Hz)	210	246	225	140	80	-	-	-	NPT 3/4”
CDX 15/2410-G/D	**X**	572	312	275	**155**	**225**	**22**	**4**	22	135	146	239	274	253	169	105	50	-	-	NPT 3/4”
CDX 15/3810-G/D	**X**	594	343	325	**155**	**255**	**23,5**	**4**	22	155	137	279	314	295	194	110	50	-	-	NPT 3/4”
CDX 15/4300-G/D	**X**	676(50Hz) 594(60Hz)	343	325	**155**	**255**	**23,5**	**4**	22	155	178(50Hz) 137(60Hz)	279	314	295	194	110	50	-	-	NPT 3/4”
CDX 15/5010-G/D	**X**	638	359	355	**180**	**280**	**26**	**4**	22	165	154	303	320	320	198	120	50	-	-	NPT 3/4”

Type	Fig.	A	B	C	Holes D	Holes E	Holes ØG	Holes N°	F	H	I	L	M	N	P	Q	R	Capacitor (µF) 220V 50Hz	Capacitor (µF) 115V 60Hz	Cable entry
CDX 15/200-G/D	**U**	301	191	152	**90**	**125**	**13**	**4**	28	77,5	77	130	128	150	-	-	-	5	25	NPT 1/2”
CDX 15/400-G/D	**U**	350	218	167	**105**	**140**	**13**	**4**	30	90	96	150	140	175	-	-	-	12○ +20●	35	NPT 1/2”
CDX 15/550-G/D	**U**	392	218	167	**105**	**140**	**13**	**4**	30	90	117	150	140	175	-	-	-	12○ +20●	35○ +10●	NPT 1/2”
CDX 15/700-G/D	**U**	394	231	205	**120**	**170**	**17**	**4**	45	102	106	177	162	200	-	-	-	16○ +80●	40○ +120●	NPT 1/2”

Ia/In = ratio between start-up current and maximum current. ○ Start-up capacitor / ● Running capacitor.

Several sizes are available with different mounting bolt patterns. Please contact sales office at Italvibras.

CDX

6 poles - 1.000/1.200 rpm

Three-phase

DESCRIPTION			Certifications	MECHANICAL SPECIFICATIONS								ELECTRICAL SPECIFICATIONS							
				Static moment*		Centrifugal force				Weight		Max input power		Power rating		Max. current			
				kgmm		kg		kN		kg		W		W		A		Ia/In	
Code	Type	SIZE		50Hz	60Hz	50Hz	60Hz	50Hz	60Hz	50Hz	60Hz	50Hz	60Hz	50Hz	60Hz	400V 50Hz	460V 60Hz	50Hz	60Hz
602315	**CDX 10/40-G/D**	10	•	30,0	30,0	**33,5**	**48,3**	**0,33**	**0,47**	11,5	11,5	120	135	50	90	0,30	0,30	1,90	2,07
602316	**CDX 10/100-G/D**	10	•	84,2	84,2	**94,0**	**136**	**0,93**	**1,33**	14,0	14,0	120	135	50	90	0,30	0,30	1,90	2,07
602317	**CDX 10/200-G/D**	20	•	163	163	**183**	**264**	**1,80**	**2,59**	21,4	21,4	185	205	100	120	0,50	0,50	2,72	3,10
602318	**CDX 10/310-G/D**	30	•	286	209	**321**	**338**	**3,15**	**3,32**	30,3	29	350	380	220	270	0,72	0,68	2,63	2,79
602320	**CDX 10/550-G/D**	35	• • • •	457	457	**512**	**737**	**5,02**	**7,23**	47,5	47,5	300	310	220	230	0,57	0,61	3,89	3,77
602325	**CDX 10/810-G/D**	50	• • • •	723	561	**809**	**905**	**7,94**	**8,88**	68,5	63,2	570	680	370	442	1,24	1,30	4,00	3,69
602274	**CDX 10/1110-G/D**	50	• • • •	1012	715	**1132**	**1151**	**11,1**	**11,3**	76,8	69,8	700	870	483	548	1,52	1,65	4,15	4,24
602277	**CDX 10/1610-G/D**	60	• • • •	1464	962	**1638**	**1549**	**16,1**	**15,2**	109	98	1040	1250	738	913	2,09	2,10	4,93	5,24
602280	**CDX 10/2610-G/D**	70	• • • •	2326	1720	**2601**	**2747**	**25,5**	**26,9**	150	136	1725	1800	1470	1470	3,80	3,70	5,40	6,03
602365	**CDX 10/3810-G/D**	80	• • • •	3422	2380	**3826**	**3831**	**37,5**	**37,6**	205	187	2100	2300	1700	1850	4,75	4,75	4,19	4,67
602201	**CDX 10/22000-G**	110	•	20025	12533	**22386**	**20208**	**220**	**198**	928	898	15600	19000	11800	14700	25,2	25,5	5,70	5,88

8 poles - 750/900 rpm

DESCRIPTION			Certifications	MECHANICAL SPECIFICATIONS								ELECTRICAL SPECIFICATIONS							
				Static moment*		Centrifugal force				Weight		Max input power		Power rating		Max. current			
				kgmm		kg		kN		kg		W		W		A		Ia/In	
Code	Type	SIZE		50Hz	60Hz	50Hz	60Hz	50Hz	60Hz	50Hz	60Hz	50Hz	60Hz	50Hz	60Hz	400V 50Hz	460V 60Hz	50Hz	60Hz
602576	**CDX 075/150-G/D**	20	•	163	163	**104**	**149**	**1,02**	**1,46**	21,4	21,4	230	250	110	120	0,85	0,76	2,13	2,11
602577	**CDX 075/250-G/D**	30	•	286	286	**181**	**260**	**1,76**	**2,55**	30,3	30,3	350	380	190	210	1,10	1,05	2,03	2,29
602578	**CDX 075/400-G/D**	35	• • • •	457	457	**288**	**415**	**2,83**	**4,07**	47,5	47,5	300	300	150	150	0,57	0,58	2,47	2,50
602581	**CDX 075/660-G/D**	50	• • • •	723	723	**456**	**656**	**4,47**	**6,44**	68,5	68,5	340	340	184	184	0,87	0,90	2,87	3,11
602552	**CDX 075/910-G/D**	50	• • • •	1012	1012	**637**	**917**	**6,25**	**9,00**	74,8	74,8	420	500	231	260	1,00	1,10	2,91	2,91
602555	**CDX 075/1310-G/D**	60	• • • •	1464	1464	**922**	**1327**	**9,04**	**13,0**	109	109	750	850	480	560	1,52	1,90	3,68	3,05
602558	**CDX 075/2110-G/D**	70	• • • •	2326	2326	**1463**	**2107**	**14,4**	**20,7**	150	150	1480	1500	1036	1100	3,52	3,45	3,58	3,91
602602	**CDX 075/3110-G/D**	80	• • • •	3421	3421	**2152**	**3099**	**21,1**	**30,4**	205	205	1850	2100	1320	1400	4,85	5,00	4,21	4,70
602513	**CDX 075/22000-G**	110	•	28633	24508	**18005**	**22192**	**177**	**218**	1015	981	10000	13000	8100	10300	21,4	22,0	6,97	5,50

* Working moment = 2 x static moment.

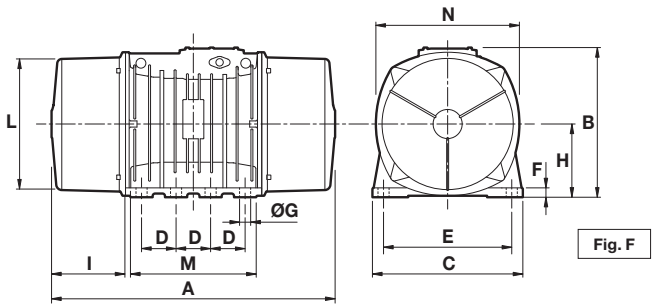

Fig. F

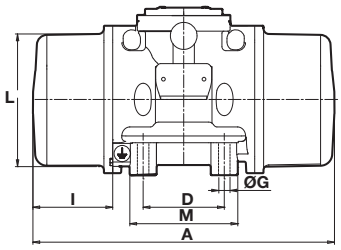

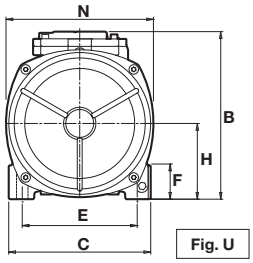

Fig. U

DIMENSIONAL SPECIFICATIONS (mm)

Type	Fig.	A	B	C	Holes D	Holes E	Holes ØG	Holes N°	F	H	I	L	M	N	P	Q	R	Cable entry
CDX 10/40-G/D	**U**	255	191	152	**90**	**125**	**13**	**4**	28	77,5	54	130	128	150	-	-	-	NPT 1/2”
CDX 10/100-G/D	**U**	301	191	152	**90**	**125**	**13**	**4**	28	77,5	77	130	128	150	-	-	-	NPT 1/2”
CDX 10/200-G/D	**U**	350	218	167	**105**	**140**	**13**	**4**	30	90	96	150	140	175	-	-	-	NPT 1/2”
CDX 10/310-G/D	**U**	394	231	205	**120**	**170**	**17**	**4**	45	102	106	177	162	200	-	-	-	NPT 1/2”
CDX 10/550-G/D	**U**	446	249	210	**120**	**170**	**17**	**4**	52	112	118	192	160	218	-	-	-	NPT 3/4”
CDX 10/810-G/D	**X**	594(50Hz) 520(60Hz)	279	235	**140**	**190**	**22**	**4**	18	116	171(50Hz) 134(60Hz)	210	246	225	140	80	-	NPT 3/4”
CDX 10/1110-G/D	**X**	594(50Hz) 520(60Hz)	279	235	**140**	**190**	**22**	**4**	18	116	171(50Hz) 134(60Hz)	210	246	225	140	80	-	NPT 3/4”
CDX 10/1610-G/D	**X**	634(50Hz) 572(60Hz)	312	275	**155**	**225**	**22**	**4**	22	135	177(50Hz) 146(60Hz)	239	274	253	169	105	50	NPT 3/4”
CDX 10/2610-G/D	**X**	676	343	325	**155**	**255**	**23,5**	**4**	22	155	178	279	314	295	194	110	50	NPT 3/4”
CDX 10/3810-G/D	**X**	734	359	355	**180**	**280**	**26**	**4**	22	165	202	303	320	320	198	120	50	NPT 3/4”
CDX 10/22000-G	**F**	1150	614	610	**140**	**520**	**45**	**8**	38	297	297,5	542	510	582	-	-	-	NPT 1”

DIMENSIONAL SPECIFICATIONS (mm)

Type	Fig.	A	B	C	Holes D	Holes E	Holes ØG	Holes N°	F	H	I	L	M	N	P	Q	R	Cable entry
CDX 075/150-G/D	**U**	350	218	167	**105**	**140**	**13**	**4**	30	90	96	150	140	175	-	-	-	NPT 1/2”
CDX 075/250-G/D	**U**	394	231	205	**120**	**170**	**17**	**4**	45	102	106	177	162	200	-	-	-	NPT 1/2”
CDX 075/400-G/D	**U**	446	249	210	**120**	**170**	**17**	**4**	52	112	118	192	160	218	-	-	-	NPT 3/4”
CDX 075/660-G/D	**X**	594	279	235	**140**	**190**	**22**	**4**	18	116	171	210	246	225	140	80	-	NPT 3/4”
CDX 075/910-G/D	**X**	594	279	235	**140**	**190**	**22**	**4**	18	116	171	210	246	225	140	80	-	NPT 3/4”
CDX 075/1310-G/D	**X**	634	312	275	**155**	**225**	**22**	**4**	22	135	177	239	274	253	169	105	50	NPT 3/4”
CDX 075/2110-G/D	**X**	676	343	325	**155**	**255**	**23,5**	**4**	22	155	178	279	314	295	194	110	50	NPT 3/4”
CDX 075/3110-G/D	**X**	734	359	355	**180**	**280**	**26**	**4**	22	165	202	303	320	320	198	120	50	NPT 3/4”
CDX 075/22000-G	**F**	1150	614	610	**140**	**520**	**45**	**8**	38	297	297,5	542	510	582	-	-	-	NPT 1”

Ia/In = ratio between start-up current and maximum current.

Several sizes are available with different mounting bolt patterns. Please contact sales office at Italvibras.

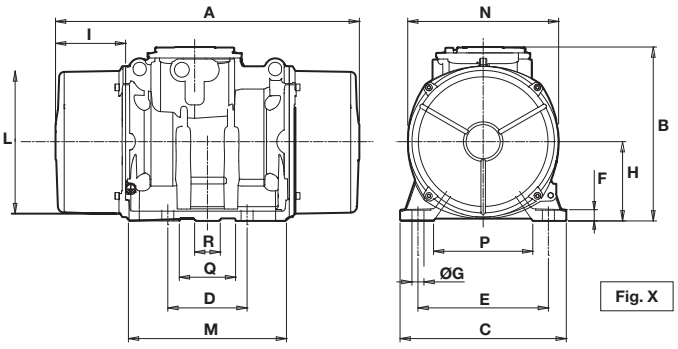

Fig. X