M3

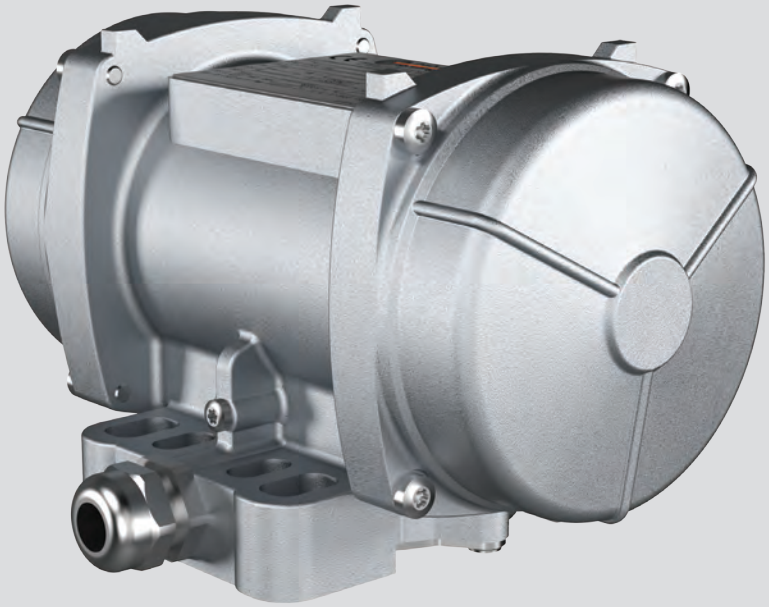

Technical features

Power supply
Three-phase voltage from 24V to 690V, 50Hz o 60Hz or single-phase 100-130V, 60Hz and 200-240V, 50Hz; suitable for use with an inverter from 20Hz to the base frequency with constant torque load profile.

Polarity
2 and 4 poles.

Conformity with Standards and Regulations
Low Voltage Directive 2006/95/EC;
ATEX Directive 2014/34/UE; EN/IEC 60034-1, EN/IEC 60079-0, EN/IEC 60079-31,
UL 1004-1, CSA C22.2 No.100, NEMA MG-1.

Functioning
Continual service (S1) at maximum declared centrifugal force and electric power. Intermittent services are also possible depending on the type of vibrator and the operating conditions. For detailed information contact our technical assistance office.

Centrifugal force
Range up to 311 kgf (3.05 kN). Centrifugal force can be changed by adjusting the eccenctric weights

Mechanical protection
IP 66 according to IEC/EN 60529.

Protection against mechanical impacts
IK 08 according to IEC/EN 62262.

Insulation class
Class F (155°C).

Tropicalization
Standard with vacuum encapsulation.

Ambient temperature
From -20°C to +40°C.

Vibrator thermal protection
On request with PTC thermistor rated heat detectors 130°C.

Fixing of the vibrator
In all positions and therefore without restriction.

Lubrication
Sealed ball bearings, lubricated “for life”.

Terminal box
The terminal box is positioned underneath the vibrator, on the same side as the fixing base. Special shaped terminals allow to fix the power supply cable, protecting it from loosening.

Electric motor
Three-phase or single-phase asynchronous type. Insulated windings using vacuum encapsulating.
The rotor is die cast aluminium.

Casing
In high-tensile aluminium alloy, with sand blasted surface. Multiholes fixing base allow different fixing patterns.

Designed for continuous industrial duty, the M3 series features a compact shape, reduced overall dimensions (in comparison to MVSI series) and the terminal box underneath, ensuring high electrical protection in dusty environments. Multi-holes mounting feet enable M3 series to match several existing mounting plates. M3 series motors comply with the most recent international standards for use in explosive dust atmospheres. Particularly M3 series can be used in zones 21 and 22.

Category: II 2 D

Level of protection:
Ex tD A21 T...°C IP66 (Ex tb IIIC T...°C Db)

Temperature class:
T120°C

Zones of use:
21, 22

Bearing flange
In ductile cast iron.
The geometry of the flange transmits the load to the casing uniformly.

Motor shaft
In treated steel alloy (Isothermic hardening) resistant to stress.

Eccentric weights
Easily adjustable from 100% down to 0.

Weight covers
Made in die cast, high strength alluminium alloy with accurate surface sand blasting.

For further details please contact sales offices at Italvibras.
The technical data and models listed in this catalogue are not binding. Italvibras reserves the right to modify them without prior notice.

Certifications

CE
Compliance with the applicable European Union directives.

c SP us
Standard CAN/CSA – C22.2, N°.100-95,
Certificate n° LR 100948
Class 4211 01 - Motors and generators
UL 1004-1 – Rotating Electrical Machines – General Requirements
Class II Div.2, Groups FG (T3B)

Ex
II2D (2014/34/UE)
Ex tD A21 T...°C IP66 (Ex tb IIIC T...°C Db)
EN 60079-0
EN 60079-31

IECEx
Ex tD A21 T...°C IP66 (Ex tb IIIC T...°C Db)
IEC 60079-0
IEC 60079-31

EAC
Certification for Eurasian Customs Union
N° TC N RU Д-IT.АЛ33.B.02527
N° TC RU C-IT.ГБ08.B.02190

KCs
KOSHA Korea
Certificate n° 11-AVG BO-0359
Ex td A21 IP66

M3

2 poles - 3.000/3.600 rpm

Three-phase

DESCRIPTION					MECHANICAL SPECIFICATIONS								ELECTRICAL SPECIFICATIONS					
					Static moment* kgmm		Centrifugal force kg		Centrifugal force kN		Weight kg		Max input power W		Max. current A 400V 50Hz	Max. current A 460V 60Hz	Ia/In	
Code	Type	SIZE		II2D Temp. class	50Hz	60Hz	50Hz	60Hz	50Hz	60Hz	50Hz	60Hz	50Hz	60Hz			50Hz	60Hz
600467	**M3/65-S02**	00	•	120°C	6,43	6,43	**64,7**	**93,1**	**0,635**	**0,913**	4,30	4,30	120	120	0,27	0,23	3,43	3,90
600465	**M3/105-S02**	00	•	120°C	9,64	9,64	**97**	**140**	**0,95**	**1,37**	5,20	5,20	180	180	0,35	0,30	2,68	3,00
600462	**M3/205-S02**	00	•	120°C	20,2	20,2	**203**	**293**	**2,00**	**2,87**	6,00	6,00	180	180	0,35	0,30	2,68	3,00
600461	**M3/305-S02**	00	•	120°C	29,8	20,2	**300**	**293**	**2,94**	**2,87**	6,30	6,00	180	180	0,35	0,30	2,68	3,00

Single-phase

					Static moment* kgmm		Centrifugal force kg		Centrifugal force kN		Weight kg		Max input power W		Max. current A 220V 50Hz	Max. current A 115V 60Hz	Ia/In	
Code	Type	SIZE		II2D Temp. class	50Hz	60Hz	50Hz	60Hz	50Hz	60Hz	50Hz	60Hz	50Hz	60Hz			50Hz	60Hz
600467	**M3/65-S02**	00	•	120°C	6,43	6,43	**64,7**	**93,1**	**0,635**	**0,913**	4,30	4,30	110	110	0,56	1,52	2,24	2,24
600465	**M3/105-S02**	00	•	120°C	9,64	9,64	**97**	**140**	**0,95**	**1,37**	5,20	5,20	165	165	0,75	1,52	1,67	2,24
600462	**M3/205-S02**	00	•	120°C	20,2	20,2	**203**	**293**	**2,00**	**2,87**	6,00	6,00	165	165	0,75	1,52	1,67	2,24
600461	**M3/305-S02**	00	•	120°C	29,8	20,2	**300**	**293**	**2,94**	**2,87**	6,30	6,00	165	165	0,75	1,52	1,67	2,24

4 poles - 1.500/1.800 rpm

Three-phase

DESCRIPTION					MECHANICAL SPECIFICATIONS								ELECTRICAL SPECIFICATIONS					
					Static moment* kgmm		Centrifugal force kg		Centrifugal force kN		Weight kg		Max input power W		Max. current A 400V 50Hz	Max. current A 460V 60Hz	Ia/In	
Code	Type	SIZE		II2D Temp. class	50Hz	60Hz	50Hz	60Hz	50Hz	60Hz	50Hz	60Hz	50Hz	60Hz			50Hz	60Hz
601514	**M15/36-S02**	00	•	120°C	12,1	12,1	**30,5**	**43,8**	**0,30**	**0,43**	5,40	5,40	85	95	0,21	0,20	1,78	1,95
601515	**M15/81-S02**	00	•	120°C	29,8	20,2	**75,0**	**73,0**	**0,74**	**0,72**	6,30	6,0	85	95	0,21	0,20	1,78	1,95

Single-phase

					Static moment* kgmm		Centrifugal force kg		Centrifugal force kN		Weight kg		Max input power W		Max. current A 220V 50Hz	Max. current A 115V 60Hz	Ia/In	
Code	Type	SIZE		II2D Temp. class	50Hz	60Hz	50Hz	60Hz	50Hz	60Hz	50Hz	60Hz	50Hz	60Hz			50Hz	60Hz
601514	**M15/36-S02**	00	•	120°C	12,1	12,1	**30,5**	**43,8**	**0,30**	**0,43**	5,40	5,40	90	100	0,43	1,00	1,20	1,30
601515	**M15/81-S02**	00	•	120°C	29,8	20,2	**75,0**	**73,0**	**0,74**	**0,72**	6,30	6,0	90	100	0,43	1,00	1,20	1,30

* Working moment = 2 x static moment. Ia/In = rapporto fra corrente di avviamento e corrente max.

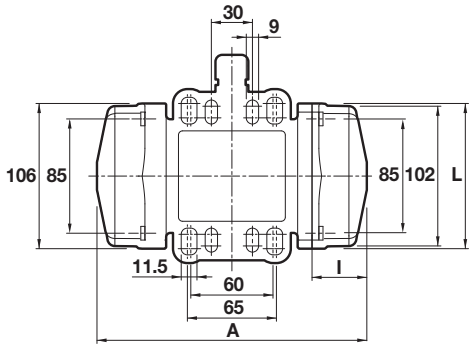

Fig. M1

DIMENSIONAL SPECIFICATIONS (mm)

Type	Fig.	A	B	C	Multi-hole D	Multi-hole E	Holes ØG	Holes N°	F	H	I	ØL	M	N	P	Capacitor (µF) 220V 50Hz	Capacitor (µF) 115V 60Hz	Cable entry thread
M3/65-S02	**M1**	197	123	127	See drawing		9	4	24	70	40	106	86	106	88,5	-	-	M20x1,5
M3/105-S02	**M1**	211									47							
M3/205-S02	**M1**	235									59							
M3/305-S02	**M1**	235									59							

Type	Fig.	A	B	C	Multi-hole D	Multi-hole E	Holes ØG	Holes N°	F	H	I	ØL	M	N	P	Capacitor (µF) 220V 50Hz	Capacitor (µF) 115V 60Hz	Cable entry thread
M3/65-S02	**M1**	197	123	127	See drawing		9	4	24	70	40	106	86	106	88,5	10	28	M20x1,5
M3/105-S02	**M1**	211									47							
M3/205-S02	**M1**	235									59							
M3/305-S02	**M1**	235									59							

DIMENSIONAL SPECIFICATIONS (mm)

Type	Fig.	A	B	C	Multi-hole D	Multi-hole E	Holes ØG	Holes N°	F	H	I	ØL	M	N	P	Capacitor (µF) 220V 50Hz	Capacitor (µF) 115V 60Hz	Cable entry thread
M15/36-S02	**M1**	214	123	127	See drawing		9	4	24	70	59	106	86	106	88,5	-	-	M20X1,5
M15/81-S02	**M1**	235																

Type	Fig.	A	B	C	Multi-hole D	Multi-hole E	Holes ØG	Holes N°	F	H	I	ØL	M	N	P	Capacitor (µF) 220V 50Hz	Capacitor (µF) 115V 60Hz	Cable entry thread
M15/36-S02	**M1**	214	123	127	See drawing		9	4	24	70	59	106	86	106	88,5	3,15	25	M20X1,5
M15/81-S02	**M1**	235																