MTF

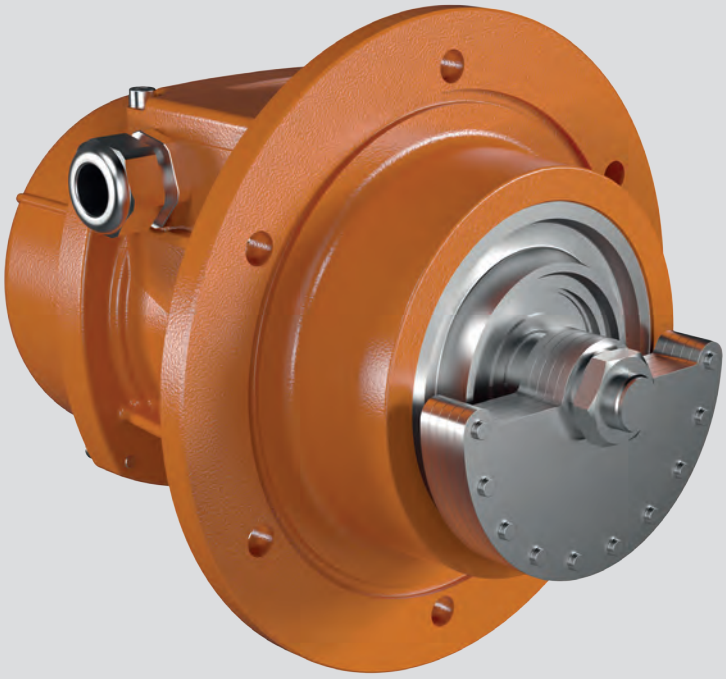

Technical features

Power supply
Three-phase voltage from 24V to 690V, 50Hz or 60Hz or single-phase 100-130V, 60Hz and 200-240V, 50Hz (single-phase types are supplied without capacitor); suitable for use with an inverter from 20Hz to the base frequency with constant torque load profile.

Polarity
2 or 4 poles, other polarities on request.

onformity with Standards and Regulations
Low Voltage Directive 2006/95/EC;
ATEX Directive 2014/34/UE; EN/IEC 60034-1, EN/IEC 60079-0, EN/IEC 60079-31,
UL 1004-1, CSA C22.2 No.100, NEMA MG-1.

Functioning
Continual service (S1) at maximum declared centrifugal force and electric power. Intermittent services are also possible depending on the type of vibrator and the operating conditions. For detailed information, contact our technical assistance office.

Centrifugal force
Range extended up to 2615 kgf. (25.7 kN), with centrifugal force adjustable by varying weights position.

Mechanical protection
IP 66 according to IEC/EN 60529. Mechanical protection is ensured in the mounting phase of the vibrator onto the vibrating machine, by introducing the special seal into the seat on the coupling flange.

Protection against mechanical impacts
IK 08 according to IEC/EN 62262.

Insulation class
Class F (155°C), class H (180°C) on request.

Tropicalization
Standard on all vibrators, with vacuum encapsulation up to size 30, with “drop by drop” trickle system for larger sizes.

Ambient temperature
From -20°C to +40°C. Versions for higher or lower temperatures are available on request.

Vibrator thermal protection
On demand with PTC rated thermistor heat detectors 130°C. Also on request thermistors with different temperatures and anti-condensation heaters.

Fixing of the vibrator
In all positions and therefore without restriction.

Lubrication
All vibrators are lubricated in the factory and do not require further lubrication at start-up.

Electrical connection box
The small size guarantees passage of tools used for fixing the vibrator to the vibrating machine. The electrical connection must be carried out using the relative connectors inserted inside the connection box. Special shaped terminals allow to fix the power supply cable, protecting it from loosening.

Electric motor
Three-phase asynchronous type. Designed for maximum starting torques and torque curves specific to requirements of vibrating machines. Insulated windings through vacuum encapsulating up to size 30; using “drop by drop” trickle system with class H resin for larger sizes. The rotor is die cast aluminium.

Casing
In high-tensile aluminium alloy up to size 50, in spheroidal cast iron for size 70.

Bearing flange
Constructed in cast iron (spheroidal or grey) or in aluminium with steel bearing seat. The geometry of the flange transmits the load to the casing uniformly.

Bearings
The lower and upper bearings have been studied to support the relative load and therefore they have a particular geometry, especially designed and made for Italvibras.

Motor shaft
In treated steel alloy (Isothermic hardening) resistant to stress.

The new MTF (MTF-S02) series, made up of vertical vibrators with lateral flange and with weight protection covers fixed to the opposite part to the flange, adopts innovative technical solutions that increase performance and reliability.

Typically used in circular screens and in small and medium-size sieves, these vibrators are supplied with lamellar or clamped eccentric weights, which regulation is particularly easy.

The MTF series complies with the most recent IEC and EN international standards for use in atmospheres with potentially explosive dust particles. In particular, the MTF series can be used in areas 21 and 22.

Category: II2D

Level of protection:

Ex tD A21 T...°C IP66 (Ex tb IIIC T...°C Db)

Temperature class:

see tables

EC certificate:

LCIE 05 ATEX 6163 X

Zones of use:

21, 22

Eccentric weights
Allow greater adjustment of the centrifugal force, with phase shift of the lower weight assembly with respect to the upper group. This adjustment is eased by a graduated scale, which expresses the centrifugal force as a percentage of the maximum centrifugal force.

Weight covers
In aluminium alloy, on request stainless steel cover in AISI 304 is available.

Painting / Surface coating
Electrostatic surface treatment based on epoxy polyester powder polymerised in oven at 200°C. Tested in salt spray fro 500 hours. On request also on MTF series other surface coatings may be available, see page 14.

For further details please contact sales offices at Italvibras.
The technical data and models listed in this catalogue are not binding. Italvibras reserves the right to modify them without prior notice.

Certifications

Compliance with the applicable European Union directives.

II2D (2014/34/UE)
Ex tD A21 T...°C IP66 (Ex tb IIIC T...°C Db)
EN 60079-0
EN 60079-31

Ex tD A21 T...°C IP66 (Ex tb IIIC T...°C Db)
IEC 60079-0
IEC 60079-31

Standard CAN/CSA – C22.2, N°.100-95,
Certificate n° LR 100948
Class 4211 01 - Motors and generators
UL 1004-1 – Rotating Electrical Machines – General Requirements
Class II Div.2, Groups FG (T3B)

Version MTF-C available on request
Class I Div.2, Groups ABCD
Standard CAN/CSA – C22.2

Certification for Eurasian Customs Union
N° TC N RU Д-IT.АЛ33.B.02527
N° TC RU C-IT.ГБ08.B.02190

KOSHA Korea
Certificate n° 11-AVG BO-0359
Ex td A21 IP66

MTF

2 poles - 3.000/3.600 rpm

Three-phase

DESCRIPTION					MECHANICAL SPECIFICATIONS						ELECTRICAL SPECIFICATIONS					
					Centrifugal force (A/B)*				Weight		Max input power		Max. current		Ia/In	
					kg		kN		kg		W		A			
Code	Type	SIZE		II2D Temp. class	50Hz	60Hz	50Hz	60Hz	50Hz	60Hz	50Hz	60Hz	400V 50Hz	460V 60Hz	50Hz	60Hz
600375	**MTF 3/65-S02**	00	-	120°C	**31/31**	**44/44**	**0,30/0,30**	**0,43/0,43**	5,4	5,4	120	120	0,27	0,23	3,43	3,90
600369	**MTF 3/200-S02**	01	•	120°C	**102/102**	**117/117**	**1,00/1,00**	**1,15/1,15**	7,5	7,3	180	180	0,35	0,30	2,68	3,00
600370	**MTF 3/300-S02**	10	•	120°C	**151/151**	**163/163**	**1,48/1,48**	**1,60/1,60**	11,2	10,9	260	270	0,60	0,50	3,47	4,20
600378	**MTF 3/500-S02**	20	•	120°C	**292/292**	**252/252**	**2,86/2,86**	**2,47/2,47**	15,0	14,1	450	500	0,80	0,75	4,21	4,80
600456	**MTF 3/700-S02**	20	•	120°C	**350/350**	**336/336**	**3,43/3,43**	**3,30/3,30**	15,2	14,3	450	500	0,80	0,75	4,21	4,80
600380	**MTF 3/800-S02**	30	•	120°C	**375/375**	**405/405**	**3,67/3,67**	**3,97/3,97**	17,0	16,5	650	685	1,10	1,00	3,83	6,00
600285	**MTF 3/1100-S90**	40	•	120°C	**553/553**	**530/530**	**5,42/5,42**	**5,20/5,20**	26,0	25,0	940	1130	1,70	1,60	6,79	7,00

Single-phase

					Centrifugal force (A/B)*				Weight		Max input power		Max. current		Ia/In	
					kg		kN		kg		W		A			
Code	Type	SIZE		II2D Temp. class	50Hz	60Hz	50Hz	60Hz	50Hz	60Hz	50Hz	60Hz	220V 50Hz	115V 60Hz	50Hz	60Hz
600375	**MTF 3/65-S02**	00	-	120°C	**31/31**	**44/44**	**0,30/0,30**	**0,43/0,43**	5,4	5,4	110	110	0,56	1,52	2,24	2,24
600369	**MTF 3/200-S02**	01	-	120°C	**102/102**	**117/117**	**1,00/1,00**	**1,15/1,15**	7,5	7,3	165	165	0,75	1,52	1,67	2,24
600370	**MTF 3/300-S02**	10	-	120°C	**151/151**	**163/163**	**1,48/1,48**	**1,60/1,60**	11,2	10,9	280	280	1,25	2,40	2,48	3,52
600378	**MTF 3/500-S02**	20	-	120°C	**292/292**	**252/252**	**2,86/2,86**	**2,47/2,47**	15,0	14,1	500	500	2,30	4,50	3,35	4,22
600456	**MTF 3/700-S02**	20	-	120°C	**350/350**	**336/336**	**3,43/3,43**	**3,30/3,30**	15,2	14,3	500	500	2,30	4,50	3,35	4,22
600380	**MTF 3/800-S02**	30	-	120°C	**375/375**	**405/405**	**3,67/3,67**	**3,97/3,97**	17,0	16,5	700	750	3,25	7,00	4,00	4,14

* Listed as A/B: total centrifugal force is the sum of centrifugal force of top weights (A) and centrifugal force of bottom weights (B).

Ia/In = ratio between start-up current and maximum current.

Weight adjustment

Frontal fixing weights

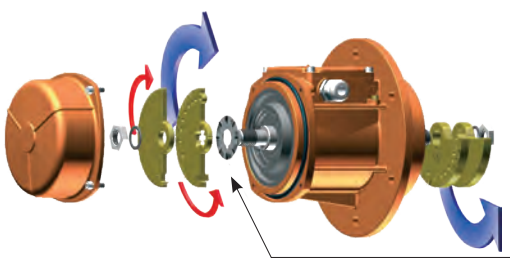

Clamp fixing weights

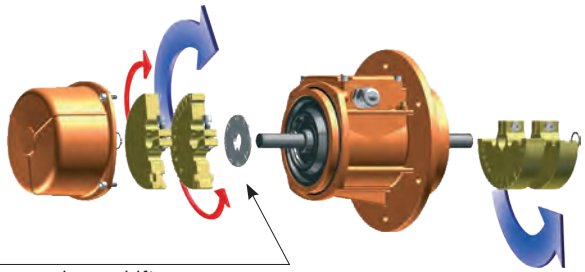

Graduated disks for upper and lower weight group phase shift

Regulation between upper and lower weight groups

Single weight phase shift

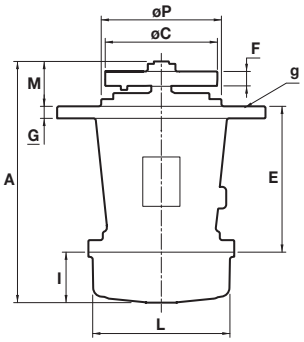

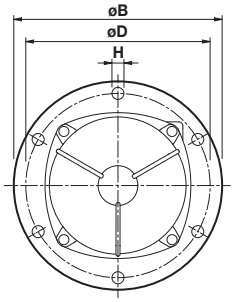

Fig. G

DIMENSIONAL SPECIFICATIONS (mm)

Type	Fig.	A	ØB	ØC	Holes ØD	Holes ØH	Holes N°	E	F	G	I	L	M	ØP	Capacitor (µF) 220V 50Hz	Capacitor (µF) 115V 60Hz	Cable entry thread	Seal g
MTF 3/65-S02	**G**	191	130	86	**109**	**8,5**	**4**	129	8	10	40	106	22	-	-	-	M20x1,5	OR 3350
MTF 3/200-S02	**G**	226	211,5	93	**188**	**12**	**4**	144	20(50Hz) 16(60Hz)	10	58	103	23,5	-	-	-	M20x1,5	OR 4650
MTF 3/300-S02	**G**	247	215	114	**187**	**12**	**4**	179,5	16(50Hz) 12(60Hz)	13	54	127	13,5	-	-	-	M20x1,5	OR 4625
MTF 3/500-S02	**G**	279,5	245	132	**205**	**12**	**6**	124	20(50Hz) 12(60Hz)	12	65	145	90,5	162	-	-	M25x1,5	OR 4700
MTF 3/700-S02	**G**	279,5	245	132	**205**	**12**	**6**	124	24(50Hz) 16(60Hz)	12	65	145	90,5	162	-	-	M25x1,5	OR 4700
MTF 3/800-S02	**G**	301	260	154	**230**	**15**	**6**	182	16(50Hz) 12(60Hz)	15	63	170	56	150	-	-	M25x1,5	OR 4800
MTF 3/1100-S90	**G**	383	279	145	**254**	**14**	**4**	-	31(50Hz) 21(60Hz)	17,5	57,5	-	63	229	-	-	M25x1,5	-

Tipo	Fig.	A	ØB	ØC	Fori ØD	Fori ØH	Fori N°	E	F	G	I	L	M	ØP	Capacitor (µF) 220V 50Hz	Capacitor (µF) 115V 60Hz	Cable entry thread	Seal g
MTF 3/65-S02	**G**	191	130	86	**109**	**8,5**	**4**	129	8	10	40	106	22	-	10	28	M20x1,5	OR 3350
MTF 3/200-S02	**G**	226	211,5	93	**188**	**12**	**4**	144	20(50Hz) 16(60Hz)	10	58	103	23,5	-	10	35	M20x1,5	OR 4650
MTF 3/300-S02	**G**	247	215	114	**187**	**12**	**4**	179,5	16(50Hz) 12(60Hz)	13	54	127	13,5	-	16	25	M20x1,5	OR 4625
MTF 3/500-S02	**G**	279,5	245	132	**205**	**12**	**6**	124	20(50Hz) 12(60Hz)	12	65	145	90,5	162	12,5	50	M25x1,5	OR 4700
MTF 3/700-S02	**G**	279,5	245	132	**205**	**12**	**6**	124	24(50Hz) 16(60Hz)	12	65	145	90,5	162	12,5	50	M25x1,5	OR 4700
MTF 3/800-S02	**G**	301	260	154	**230**	**15**	**6**	182	16(50Hz) 12(60Hz)	15	63	170	56	150	25	90	M25x1,5	OR 4800

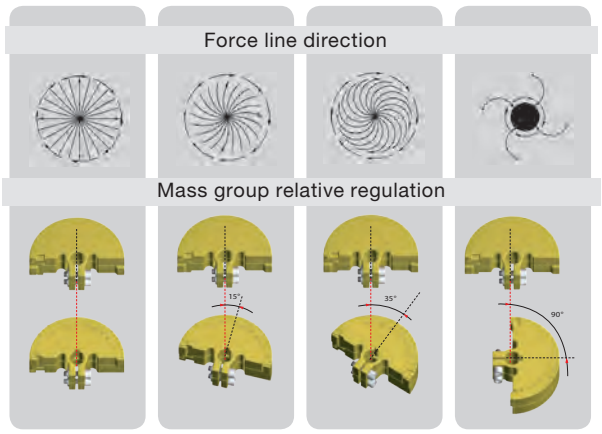

MTF

4 poles - 1.500/1.800 rpm

Three-phase

DESCRIPTION					MECHANICAL SPECIFICATIONS						ELECTRICAL SPECIFICATIONS					
					Centrifugal force (A/B)*				Weight		Max input power		Max. current		Ia/In	
					kg		kN		kg		W		A			
Code	Type	SIZE	CSA	II2D Temp. class	50Hz	60Hz	50Hz	60Hz	50Hz	60Hz	50Hz	60Hz	400V 50Hz	460V 60Hz	50Hz	60Hz
601446	**MTF 15/80-S02**	01	-	120°C	**40/40**	**37/37**	**0,39/0,39**	**0,36/0,36**	6,8	6,5	85	95	0,21	0,20	1,78	1,95
601403	**MTF 15/200-S02**	10	•	120°C	**106/74**	**107/107**	**1,04/0,72**	**1,05/1,05**	14,0	13,2	170	170	0,41	0,40	2,34	2,75
601405	**MTF 15/400-S02**	20	•	120°C	**205/142**	**205/205**	**2,01/1,39**	**2,01/2,01**	20,6	19,8	300	350	0,60	0,60	3,33	3,50
601406	**MTF 15/550-S02**	20	•	120°C	**276/205**	**295/295**	**2,70/2,01**	**2,70/2,70**	22,0	20,6	300	350	0,60	0,60	3,33	3,50
601407	**MTF 15/700-S02**	30	•	120°C	**360/263**	**380/380**	**3,53/2,58**	**3,73/3,73**	26,0	24,5	525	665	0,92	0,98	3,48	3,43
601280	**MTF 15/1100-S90**	40	•	120°C	**504/504**	**491/491**	**4,94/4,94**	**4,82/4,82**	36,0	31,4	900	1050	1,45	1,50	4,10	4,20
601379	**MTF 15/1710-S02-VRS**	50	•	150°C	**894/322**	**878/355**	**8,77/3,16**	**8,61/3,48**	44,0	41,5	1100	1200	2,00	1,90	4,29	4,89
601380	**MTF 15/2000-S02-VRS**	50	•	170°C	**1021/357**	**1017/390**	**10,0/3,50**	**9,98/3,83**	48,0	45,5	1350	1450	2,50	2,30	4,30	4,90
601381	**MTF 15/3810-S02-VRS**	70	•	135°C	**1908/707**	**1872/718**	**18,7/6,94**	**18,4/7,04**	100,0	93,0	2200	2500	3,90	3,90	7,11	6,92

Single-phase

					Centrifugal force (A/B)*				Weight		Max input power		Max. current		Ia/In	
					kg		kN		kg		W		A			
Code	Type	SIZE	CSA	II2D Temp. class	50Hz	60Hz	50Hz	60Hz	50Hz	60Hz	50Hz	60Hz	220V 50Hz	115V 60Hz	50Hz	60Hz
601446	**MTF 15/80-S02**	01	-	120°C	**40/40**	**37/37**	**0,39/0,39**	**0,36/0,36**	6,8	6,5	90	100	0,43	1,00	1,20	1,3
601403	**MTF 15/200-S02**	10	-	120°C	**106/74**	**107/107**	**1,04/0,72**	**1,05/1,05**	14,0	13,2	210	230	1,00	2,00	1,50	1,85
601405	**MTF 15/400-S02**	20	-	120°C	**205/142**	**205/205**	**2,01/1,39**	**2,01/2,01**	20,6	19,8	240	320	1,20	2,80	2,50	2,5
601406	**MTF 15/550-S02**	20	-	120°C	**276/205**	**295/295**	**2,70/2,01**	**2,70/2,70**	22,0	20,6	240	320	1,20	2,80	2,50	2,5
601407	**MTF 15/700-S02**	30	-	120°C	**360/263**	**380/380**	**3,53/2,58**	**3,73/3,73**	26,0	24,5	450	550	2,15	5,15	5,44	3,63

* Listed as A/B: total centrifugal force is the sum of centrifugal force of top weights (A) and centrifugal force of bottom weights (B).

Ia/In = ratio between start-up current and maximum current.

Weight adjustment

Frontal fixing weights

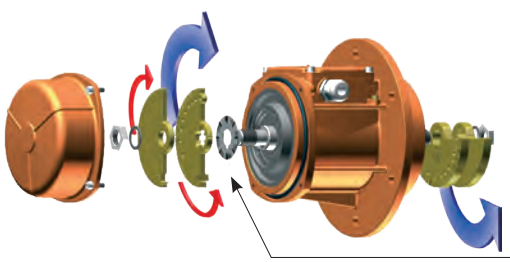

Clamp fixing weights

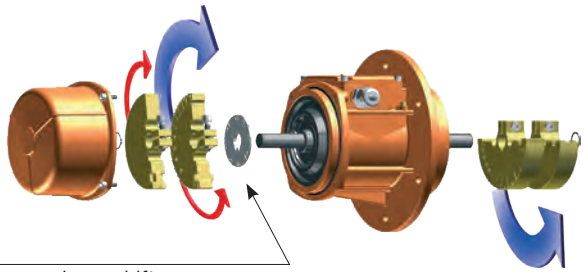

Graduated disks for upper and lower weight group phase shift

Regulation between upper and lower weight groups

Single weight phase shift

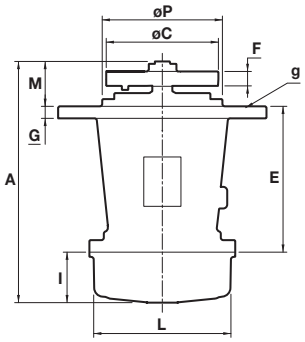

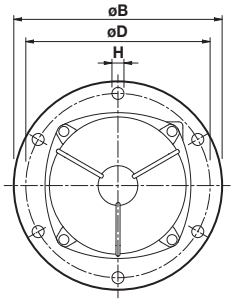

Fig. G

DIMENSIONAL SPECIFICATIONS (mm)

Type	Fig.	A	ØB	ØC	Holes ØD	Holes ØH	Holes N°	E	F	G	I	L	M	ØP	Capacitor (µF) 220V 50Hz	Capacitor (µF) 115V 60Hz	Cable entry thread	Seal g
MTF 15/80-S02	**G**	241	211,5	93	**188**	**12**	**4**	144	32(50Hz) 20(60Hz)	10	65	103	32	-	-	-	M20x1,5	OR 4650
MTF 15/200-S02	**G**	292,5	215	114(50Hz) 108(60Hz)	**187**	**12**	**4**	179,5	48(50Hz) 40(60Hz)	13	77	127	36	-	-	-	M20x1,5	OR 4625
MTF 15/400-S02	**G**	335,5	245	130	**205**	**12**	**6**	124	59(50Hz) 42(60Hz)	12	93	145	118,5	162	-	-	M25x1,5	OR 4700
MTF 15/550-S02	**G**	376,5	245	130	**205**	**12**	**6**	124	79(50Hz) 59(60Hz)	12	114	145	138,5	162	-	-	M25x1,5	OR 4700
MTF 15/700-S02	**G**	380,5	260	154	**230**	**15**	**6**	182	59(50Hz) 46(60Hz)	15	106	170	92,5	150	-	-	M25x1,5	OR 4800
MTF 15/1100-S90	**G**	429	279	190	**254**	**14**	**4**	-	49	17,5	57,5	-	-	229	-	-	M25x1,5	-
MTF 15/1710-S02-VRS	**G**	488	350	190	**290**	**17**	**6**	232	84(50Hz) 57(60Hz)	25	134	209	122	172	-	-	M25x1,5	-
MTF 15/2000-S02-VRS	**G**	500(50Hz) 488(60Hz)	350	193	**290**	**17**	**6**	232	100(50Hz) 68(60Hz)	25	134	209	133(50Hz) 122(60Hz)	172	-	-	M25x1,5	-
MTF 15/3810-S02-VRS	**G**	614	410	250(50Hz) 244(60Hz)	**350**	**22**	**6**	310	78(50Hz) 57(60Hz)	27	178	280	126	234	-	-	M25x1,5	-

Type	Fig.	A	ØB	ØC	Holes ØD	Holes ØH	Holes N°	E	F	G	I	L	M	ØP	Capacitor (µF) 220V 50Hz	Capacitor (µF) 115V 60Hz	Cable entry thread	Seal g
MTF 15/80-S02	**G**	241	211,5	93	**188**	**12**	**4**	144	32(50Hz) 20(60Hz)	10	65	103	32	-	3,15	25	M20x1,5	OR 4650
MTF 15/200-S02	**G**	292,5	215	114(50Hz) 108(60Hz)	**187**	**12**	**4**	179,5	48(50Hz) 40(60Hz)	13	77	127	36	-	5	25	M20x1,5	OR 4625
MTF 15/400-S02	**G**	335,5	245	130	**205**	**12**	**6**	124	59(50Hz) 42(60Hz)	12	93	145	118,5	162	12○ +20●	35	M20x1,5	OR 4700
MTF 15/550-S02	**G**	376,5	245	130	**205**	**12**	**6**	124	79(50Hz) 59(60Hz)	12	114	145	138,5	162	12○ +20●	35○ +10●	M20x1,5	OR 4700
MTF 15/700-S02	**G**	380,5	260	154	**230**	**15**	**6**	182	59(50Hz) 46(60Hz)	15	106	170	92,5	150	16○ +80●	40○ +120●	M25x1,5	OR 4800

○ Running capacitor / ● Additional capacitor only for start-up.

