MVSS

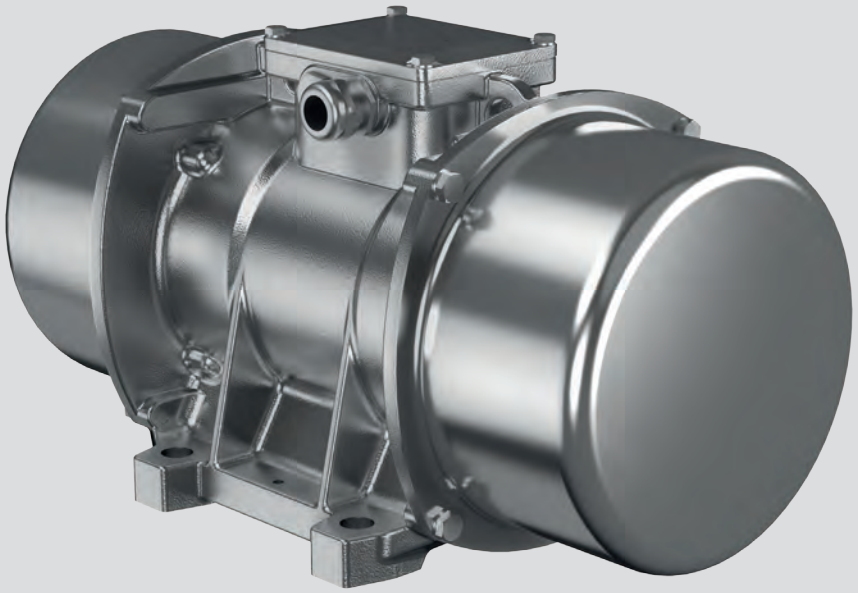

Technical features

Power supply
Three-phase voltage from 24V to 690V, 50Hz or 60Hz or single-phase 100-130V, 60Hz and 200-240V, 50Hz (single-phase types are supplied without capacitor); suitable for use with an inverter from 20Hz to the base frequency with constant torque load profile.

Polarity
2, 4, 6 and 8 poles.

Conformity with Standards and Regulations
MVSS - Low Voltage Directive 2006/95/EC; EN/IEC 60034-1; UL 1004-1, CSA C22.2 No.100, NEMA MG-1.
MVSS-P - Low Voltage Directive 2006/95/EC; ATEX Directive 2014/34/UE; EN/IEC 60034-1, EN/IEC 60079-0, EN/IEC 60079-31, UL 1004-1, CSA C22.2 No.100, NEMA MG-1.

Functioning
Continual service (S1) at maximum declared centrifugal force and electric power. Intermittent services are also possible depending on the type of vibrator and the operating conditions. For detailed information, contact our technical assistance office.

Centrifugal force
Range extended up to 4300 kgf. (42.4 kN), with centrifugal force adjustable from 0 to 100%.

Mechanical protection
IP 66 according to IEC/EN 60529.

Insulation class
Class F (155°C), class H (180°C) on request.

Tropicalization
Standard on all vibrators, with vacuum encapsulation up to size 35, with “drop by drop” trickle system for larger sizes.

Ambient temperature
From -20°C to +40°C. Versions for higher or lower temperatures are available on request.

Vibrator thermal protection
Standard PTC rated thermistor heat detectors 130°C on size 70, on request for smaller sizes. For MVSS-P series PTC 130°C are standard for all types. On request, thermistors with different temperatures and anti-condensation heaters.

Fixing of the vibrator
In all positions and therefore without restriction.

Lubrication
All vibrators are lubricated in the factory and do not require further lubrication at start-up.

Terminal box
Large fixed electrical connections, with terminal board cover in stainless steel AISI 304. Special shaped terminals allow to fix the power supply cable, protecting it from loosening.

Electric motor
Three-phase and single-phase asynchronous type. Designed for maximum starting torques and torque curves specific to vibrating machines. Insulated windings using vacuum encapsulating up to size 35; using the “drop by drop” trickle system with class H resin for larger sizes. The rotor is die cast aluminium.

Casing
In stainless steel AISI 304, ball burnishing surface treated to make the surface more hydrophobic.

Bearing flange
Constructed in cast iron (spheroidal or grey) or in aluminium with steel bearing seat. The geometry of the flange transmits the load to the casing uniformly.

Bearings
The lower and upper bearings have been studied to support the relative load and therefore they have a particular geometry, especially designed and made for Italvibras.

The MVSS stainless steel series vibrators are characterized by their total protection from liquids, dusts, aggressive agents and contaminants, thanks to the AISI 304 stainless steel casing and external components.

It is therefore suitable for use in all food, chemical, pharmaceutical and others environments where the outer surface can be subject to corrosion by atmospheric or chemical / bacterial agents.

Line MVSS-P is available for potentially explosive dust atmospheres in conformity with ATEX Directive 2014/34/UE.

Category: II2D

Level of protection:

Ex tD A21 T...°C IP66 (Ex tb IIIC T...°C Db)

Temperature class:

si veda tabella

EC certificate:

LCIE 05 ATEX 6163 X

Zones of use:

21, 22

Motor shaft
In treated steel alloy (Isothermic hardening) resistant to stress.

Eccentric weights
Allow continual adjustment of the centrifugal force. This adjustment is realized by a graduated scale, which expresses the centrifugal force as a percentage of the maximum centrifugal force.
A patented system, called ARS, prevents adjustment errors.

Weight covers
In stainless steel AISI 304 with thickness measuring 1.2 to 1.5mm, to unite mechanical resistance to the guaranteed protection of stainless steel.

Surface treatment
Ball burnishing surface treatment to obtain a low roughness, hydrofobic, bright and uniform external surface.

Other features
Identification plate in AISI 316L stainless steel.

For further details please contact sales offices at Italvibras.
The technical data and models listed in this catalogue are not binding. Italvibras reserves the right to modify them without prior notice.

Certifications MVSS

Compliance with the applicable European Union directives.

Standard CAN/CSA – C22.2, N°.100-95,
Certificate n° LR 100948
Class 4211 01 - Motors and generators
UL 1004-1 – Rotating Electrical Machines – General Requirements
Class II Div.2, Groups FG (T3B)

Certification for Eurasian Customs Union
N° TC N RU Д-IT.АЛ33.B.02527

Certifications MVSS-P

Compliance with the applicable European Union directives.

II2D (2014/34/UE)
Ex tD A21 T...°C IP66 (Ex tb IIIC T...°C Db)
EN 60079-0
EN 60079-31

Ex tD A21 T...°C IP66 (Ex tb IIIC T...°C Db)
IEC 60079-0
IEC 60079-31

Certification for Eurasian Customs Union
N° TC RU C-IT.ГБ08.B.02190

MVSS

2 poles - 3.000/3.600 rpm

Three-phase

DESCRIPTION				MECHANICAL SPECIFICATIONS								ELECTRICAL SPECIFICATIONS					
				Static moment* kgmm		Centrifugal force kg		Centrifugal force kN		Weight kg		Max input power W		Max. current A		Ia/In	
Code	Type	SIZE		50Hz	60Hz	50Hz	60Hz	50Hz	60Hz	50Hz	60Hz	50Hz	60Hz	400V 50Hz	460V 60Hz	50Hz	60Hz
600328	**MVSS 3/100-S02**	00	•	12,1	12,1	**122**	**176**	**1,20**	**1,72**	7,80	7,80	180	180	0,35	0,30	2,68	3,00
600329	**MVSS 3/200-S02**	01	•	20,2	16,2	**203**	**234**	**1,99**	**2,29**	8,20	8,00	180	180	0,35	0,30	2,68	3,00
600330	**MVSS 3/300-S02**	10	•	30,0	22,5	**302**	**326**	**2,96**	**3,20**	12,5	12,0	260	270	0,60	0,50	3,47	4,20
600331	**MVSS 3/500-S02**	20	•	58,0	34,8	**584**	**504**	**5,72**	**4,94**	18,5	17,5	450	500	0,80	0,75	4,21	4,80
600515	**MVSS 3/800-S08**	30	•	74,5	55,9	**750**	**810**	**7,35**	**7,94**	25,0	24,0	650	685	1,10	1,00	3,83	6,00
600333	**MVSS 3/1100-S02**	35	•	110	73,0	**1105**	**1061**	**10,8**	**10,4**	30,0	29,0	1000	1200	1,75	1,75	3,63	4,00
600334	**MVSS 3/1510-S02**	40	•	153	102	**1545**	**1483**	**15,2**	**14,5**	39,6	38,0	1400	1450	2,30	2,00	4,95	6,12
600335	**MVSS 3/2010-S02**	50	•	205	128	**2059**	**1853**	**20,2**	**18,2**	48,7	46,3	2200	2200	3,50	3,00	4,62	6,00

Single-phase

				Static moment* kgmm		Centrifugal force kg		Centrifugal force kN		Weight kg		Max input power W		Max. current A		Ia/In	
Code	Type	SIZE		50Hz	60Hz	50Hz	60Hz	50Hz	60Hz	50Hz	60Hz	50Hz	60Hz	220V 50Hz	115V 60Hz	50Hz	60Hz
600328	**MVSS 3/100-S02**	00	•	12,1	12,1	**122**	**176**	**1,20**	**1,72**	7,80	7,80	165	165	0,75	1,52	1,67	2,24
600329	**MVSS 3/200-S02**	01	•	20,2	16,2	**203**	**234**	**1,99**	**2,29**	8,20	8,00	165	165	0,75	1,52	1,67	2,24
600330	**MVSS 3/300-S02**	10	•	30,0	22,5	**302**	**326**	**2,96**	**3,20**	12,5	12,0	280	280	1,25	2,40	2,48	3,52
600331	**MVSS 3/500-S02**	20	•	58,0	34,8	**584**	**504**	**5,72**	**4,94**	18,5	17,5	500	500	2,30	4,50	3,35	4,22
600515	**MVSS 3/800-S08**	30	•	74,5	55,9	**750**	**810**	**7,35**	**7,94**	25,0	24,0	700	750	3,25	7,00	4,00	4,14

* Working moment = 2 x static moment.

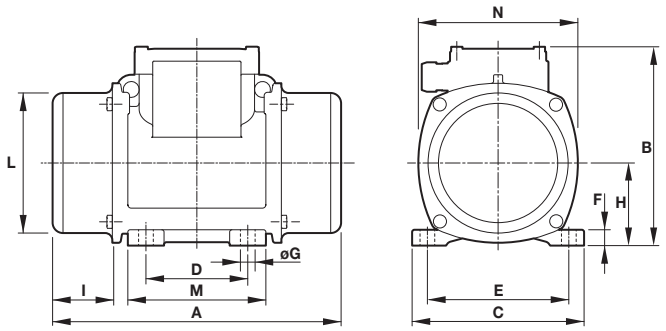

Fig. W

DIMENSIONAL SPECIFICATIONS (mm)

Type	Fig.	A	B	C	Holes D	E	ØG	N°	F	H	I	L	M	N	Capacitor (µF) 220V 50Hz	Capacitor (µF) 115V 60Hz	Cable entry thread
MVSS 3/100-S02	**W**	209	151	125	**62-74****	**106**	**9**	**4**	10	61	45	100	100	117	-	-	M20x1,5
MVSS 3/200-S02	**W**	225	151	125	**62-74****	**106**	**9**	**4**	10	61	53	100	100	117	-	-	M20x1,5
MVSS 3/300-S02	**W**	255	176	152	**90**	**125**	**13**	**4**	14	73	54	124	122	141	-	-	M20x1,5
MVSS 3/500-S02	**W**	284	200	167	**105**	**140**	**13**	**4**	15	82,5	63	143	137	160	-	-	M25x1,5
MVSS 3/800-S08	**W**	308	205	205	**120**	**170**	**17**	**4**	17	93,5	63	168	158	182	-	-	M25x1,5
MVSS 3/1100-S02	**W**	354	232	205	**120**	**170**	**17**	**4**	20	104,5	77	181	162	203	-	-	M25x1,5
MVSS 3/1510-S02	**W**	438	245	230	**140**	**190**	**17**	**4**	25	116	103	201	180	225	-	-	M25x1,5
MVSS 3/2010-S02	**W**	438	245	230	**140**	**190**	**17**	**4**	25	116	103	201	180	225	-	-	M25x1,5

Type	Fig.	A	B	C	Holes D	E	ØG	N°	F	H	I	L	M	N	Capacitor (µF) 220V 50Hz	Capacitor (µF) 115V 60Hz	Cable entry thread
MVSS 3/100-S02	**W**	209	151	125	**62-74****	**106**	**9**	**4**	10	61	45	100	100	117	10	28	M20x1,5
MVSS 3/200-S02	**W**	225	151	125	**62-74****	**106**	**9**	**4**	10	61	53	100	100	117	10	35	M20x1,5
MVSS 3/300-S02	**W**	255	176	152	**90**	**125**	**13**	**4**	14	73	54	124	122	141	16	25	M20x1,5
MVSS 3/500-S02	**W**	284	200	167	**105**	**140**	**13**	**4**	15	82,5	63	143	137	160	12,5	50	M25x1,5
MVSS 3/800-S08	**W**	308	205	205	**120**	**170**	**17**	**4**	17	93,5	63	168	158	182	25	90	M25x1,5

Ia/In = ratio between start-up current and maximum current. **Slot.

MVSS

4 poles - 1.500/1.800 rpm

Three-phase

DESCRIPTION				MECHANICAL SPECIFICATIONS								ELECTRICAL SPECIFICATIONS					
				Static moment* kgmm		Centrifugal force kg		Centrifugal force kN		Weight kg		Max input power W		Max. current A		Ia/In	
Code	Type	SIZE		50Hz	60Hz	50Hz	60Hz	50Hz	60Hz	50Hz	60Hz	50Hz	60Hz	400V 50Hz	460V 60Hz	50Hz	60Hz
601342	**MVSS 15/35-S02**	00	•	12,1	12,1	**30,5**	**43,9**	**0,30**	**0,43**	7,80	7,80	85	95	0,21	0,20	1,78	1,95
601343	**MVSS 15/80-S02**	01	•	32,3	20,2	**81,2**	**73,2**	**0,80**	**0,72**	9,00	8,70	85	95	0,21	0,20	1,78	1,95
601365	**MVSS 15/100-S02**	01	•	37,9	32,3	**95,3**	**117**	**0,93**	**1,15**	9,40	9,00	85	95	0,21	0,20	1,78	1,95
601344	**MVSS 15/200-S02**	10	•	84,2	58,8	**213**	**214**	**2,09**	**2,10**	15,8	15,0	170	170	0,41	0,40	2,34	2,75
601345	**MVSS 15/400-S02**	20	•	163	113	**412**	**411**	**4,04**	**4,03**	22,5	21,7	300	350	0,60	0,60	3,33	3,50
601346	**MVSS 15/550-S02**	20	•	219	163	**552**	**592**	**5,42**	**5,81**	23,9	22,5	300	350	0,60	0,60	3,33	3,50
601526	**MVSS 15/700-S08**	30	•	286	209	**720**	**760**	**7,06**	**7.46**	32,0	30,7	525	665	0,92	0,98	3,48	4,43
601348	**MVSS 15/1100-S02**	35	•	415	271	**1045**	**982**	**10,3**	**9,63**	42,0	37,5	550	680	0,95	0,95	4,45	4,89
601349	**MVSS 15/1410-S02**	40	•	561	400	**1413**	**1449**	**13,9**	**14,2**	53,0	50,0	900	1050	1,45	1,50	4,10	4,20
601350	**MVSS 15/1710-S02**	50	•	715	485	**1798**	**1757**	**17,6**	**17,2**	58,5	54,5	1100	1200	2,00	1,90	4,29	4,89
601351	**MVSS 15/2000-S02**	50	•	817	561	**2054**	**2033**	**20,1**	**19,9**	70,0	68,0	1350	1450	2,50	2,30	4,30	4,90
601352	**MVSS 15/2410-S02**	60	•	962	674	**2420**	**2444**	**23,7**	**24,0**	82,0	76,0	1600	1700	3,20	3,00	6,09	7,23
601353	**MVSS 15/3000-S02**	60	•	1235	858	**3106**	**3107**	**30,5**	**30,5**	92,0	89,0	1900	2000	3,80	3,50	6,50	7,50
601354	**MVSS 15/3810-S02**	70	•	1526	1034	**3840**	**3744**	**37,7**	**36,7**	115	110	2200	2500	3,90	3,90	7,11	6,92
601363	**MVSS 15/4300-S02**	70	•	1720	1173	**4326**	**4250**	**42,4**	**41,7**	122	117	2500	2800	4,80	4,65	5,90	7,10

Single-phase

				Static moment* kgmm		Centrifugal force kg		Centrifugal force kN		Weight kg		Max input power W		Max. current A		Ia/In	
Code	Type	SIZE		50Hz	60Hz	50Hz	60Hz	50Hz	60Hz	50Hz	60Hz	50Hz	60Hz	220V 50Hz	115V 60Hz	50Hz	60Hz
601342	**MVSS 15/35-S02**	00	•	12,1	12,1	**30,5**	**43,9**	**0,30**	**0,43**	7,80	7,80	90	100	0,43	1,00	1,20	1,30
601343	**MVSS 15/80-S02**	01	•	32,3	20,2	**81,2**	**73,2**	**0,80**	**0,72**	9,00	8,70	90	100	0,43	1,00	1,20	1,30
601365	**MVSS 15/100-S02**	01	•	37,9	32,3	**95,3**	**117**	**0,93**	**1,15**	9,40	9,00	90	100	0,43	1,00	1,20	1,30
601344	**MVSS 15/200-S02**	10	•	84,2	58,8	**213,0**	**214**	**2,09**	**2,10**	15,8	15,0	210	230	1,00	2,00	1,50	1,85
601345	**MVSS 15/400-S02**	20	•	163	113	**412**	**411**	**4,04**	**4,03**	22,5	21,7	240	320	1,20	2,80	2,50	2,21
601346	**MVSS 15/550-S02**	20	•	219	163	**552**	**592**	**5,4**	**5,81**	23,9	22,5	240	320	1,20	2,80	2,50	2,21
601526	**MVSS 15/700-S08**	30	•	286	209	**720**	**760**	**7,06**	**7.46**	25,0	23,0	450	550	2,15	5,15	5,44	3,63

* Working moment = 2 x static moment.

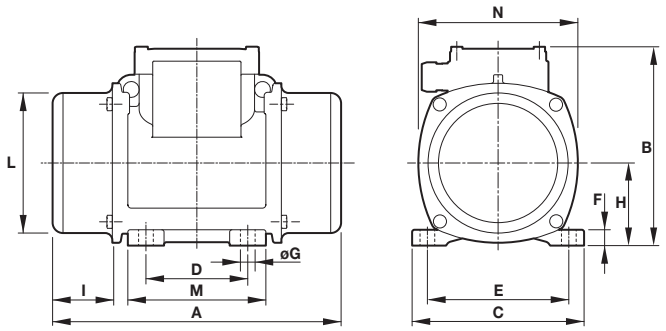

Fig. W

DIMENSIONAL SPECIFICATIONS (mm)

Type	Fig.	A	B	C	Holes D	Holes E	Holes ØG	Holes N°	F	H	I	L	M	N	Capacitor (µF) 220V 50Hz	Capacitor (µF) 115V 60Hz	Cable entry thread
MVSS 15/35-S02	**W**	209	151	125	**62-74****	**106**	**9**	**4**	10	61	45	100	100	117	-	-	M20x1,5
MVSS 15/80-S02	**W**	241	151	125	**62-74****	**106**	**9**	**4**	10	61	61	100	100	117	-	-	M20x1,5
MVSS 15/100-S02	**W**	241	151	125	**62-74****	**106**	**9**	**4**	10	61	61	100	100	117	-	-	M20x1,5
MVSS 15/200-S02	**W**	295	176	152	**90**	**125**	**13**	**4**	14	73	74	124	122	141	-	-	M20x1,5
MVSS 15/400-S02	**W**	340	200	167	**105**	**140**	**13**	**4**	15	82,5	91	143	137	160	-	-	M25x1,5
MVSS 15/550-S02	**W**	380	200	167	**105**	**140**	**13**	**4**	15	82,5	111	143	137	160	-	-	M25x1,5
MVSS 15/700-S08	**W**	382	205	205	**120**	**170**	**17**	**4**	17	93,5	100	168	158	182	-	-	M25x1,5
MVSS 15/1100-S02	**W**	434	232	205	**120**	**170**	**17**	**4**	20	104,5	117,0	181	162	203	-	-	M25x1,5
MVSS 15/1410-S02	**W**	442	245	230	**140**	**190**	**17**	**4**	25	116	105	201	180	225	-	-	M25x1,5
MVSS 15/1710-S02	**W**	490	245	230	**140**	**190**	**17**	**4**	25	116	129	201	180	225	-	-	M25x1,5
MVSS 15/2000-S02	**W**	560	245	230	**140**	**190**	**17**	**4**	25	116	164	201	180	225	-	-	M25x1,5
MVSS 15/2410-S02	**W**	523	283	275	**155**	**225**	**22**	**4**	30	135	130	231	205	253	-	-	M25x1,5
MVSS 15/3000-S02	**W**	601	283	275	**155**	**225**	**22**	**4**	30	135	169	231	205	253	-	-	M25x1,5
MVSS 15/3810-S02	**W**	589	323	310	**155**	**255**	**23,5**	**4**	35	155	139,5	269	215	295	-	-	M25x1,5
MVSS 15/4300-S02	**W**	589	323	310	**155**	**255**	**23,5**	**4**	35	155	139,5	269	215	295	-	-	M25x1,5

Type	Fig.	A	B	C	Holes D	Holes E	Holes ØG	Holes N°	F	H	I	L	M	N	Capacitor (µF) 220V 50Hz	Capacitor (µF) 115V 60Hz	Cable entry thread
MVSS 15/35-S02	**W**	209	151	125	**62-74****	**106**	**9**	**4**	10	61	45	100	100	117	3,15	25	M20x1,5
MVSS 15/80-S02	**W**	225	151	125	**62-74****	**106**	**9**	**4**	10	61	61	100	100	117	3,15	25	M20x1,5
MVSS 15/100-S02	**W**	241	151	125	**62-74****	**106**	**9**	**4**	10	61	61	100	100	117	3,15	25	M20x1,5
MVSS 15/200-S02	**W**	295	176	152	**90**	**125**	**13**	**4**	14	73	74	124	122	141	5	25	M20x1,5
MVSS 15/400-S02	**W**	340	200	167	**105**	**140**	**13**	**4**	15	82,5	91	143	137	160	12○ +20●	35	M25x1,5
MVSS 15/550-S02	**W**	380	200	167	**105**	**140**	**13**	**4**	15	82,5	111	143	137	160	12○ +20●	35○ +10●	M25x1,5
MVSS 15/700-S08	**W**	382	205	205	**120**	**170**	**17**	**4**	17	93,5	100	168	158	182	16○ +80●	40○ +120●	M25x1,5

Ia/In = ratio between start-up current and maximum current. **Slot. ○ Running capacitor / ● Additional capacitor only for start-up.

Several sizes are available with different mounting bolt patterns. Please contact sales office at Italvibras.

MVSS

6 poles - 1.000/1.200 rpm

Three-phase

DESCRIPTION				MECHANICAL SPECIFICATIONS								ELECTRICAL SPECIFICATIONS					
				Static moment* kgmm		Centrifugal force kg		Centrifugal force kN		Weight kg		Max input power W		Max. current A		Ia/In	
Code	Type	SIZE		50Hz	60Hz	50Hz	60Hz	50Hz	60Hz	50Hz	60Hz	50Hz	60Hz	400V 50Hz	460V 60Hz	50Hz	60Hz
602283	**MVSS 10/40-S02**	10	•	30,0	30,0	**33,5**	**48,3**	**0,33**	**0,47**	12,5	12,5	120	135	0,30	0,30	1,90	2,07
602284	**MVSS 10/100-S02**	10	•	84,2	84,2	**94,3**	**136**	**0,93**	**1,33**	15,8	15,8	120	135	0,30	0,30	1,90	2,07
602285	**MVSS 10/200-S02**	20	•	163	163	**183**	**264**	**1,80**	**2,59**	22,5	22,5	185	205	0,50	0,50	2,72	3,10
602405	**MVSS 10/310-S08**	30	•	286	209	**321**	**338**	**3,15**	**3,32**	32,0	30,7	350	380	0,72	0,68	2,63	2,79
602417	**MVSS 10/550-S08**	35	•	457	457	**512**	**737**	**5,02**	**7,23**	43,5	43,5	350	380	0,75	0,68	2,53	3,68
602408	**MVSS 10/810-S08**	40	•	723	561	**809**	**905**	**7,94**	**8,88**	54,0	52,6	680	760	1,40	1,35	2,79	3,33
602409	**MVSS 10/1110-S08**	50	•	1012	715	**1132**	**1151**	**11,1**	**11,3**	67,0	59,5	750	750	1,65	1,50	3,33	4,13
602410	**MVSS 10/1400-S08**	50	•	1274	921	**1424**	**1483**	**14,0**	**14,5**	78,0	71,0	950	1000	1,80	1,70	3,05	3,65
602411	**MVSS 10/1610-S08**	60	•	1464	962	**1638**	**1549**	**16,1**	**15,2**	94,0	83,0	1100	1300	2,20	2,20	4,21	4,05
602412	**MVSS 10/2100-S08**	60	•	1927	1318	**2154**	**2102**	**21,1**	**20,6**	105	93,0	1500	1770	3,00	2,75	3,42	4,00
602293	**MVSS 10/2610-S02**	70	•	2326	1720	**2601**	**2747**	**25,5**	**26,9**	130	116	1960	2100	4,10	3,75	5,35	5,60
602294	**MVSS 10/3000-S02**	70	•	2690	1940	**3007**	**3124**	**29,5**	**30,6**	145	130	2200	2400	4,50	4,30	4,35	4,81

8 poles - 750/900 rpm

DESCRIPTION				MECHANICAL SPECIFICATIONS								ELECTRICAL SPECIFICATIONS					
				Static moment* kgmm		Centrifugal force kg		Centrifugal force kN		Weight kg		Max input power W		Max. current A		Ia/In	
Code	Type	SIZE		50Hz	60Hz	50Hz	60Hz	50Hz	60Hz	50Hz	60Hz	50Hz	60Hz	400V 50Hz	460V 60Hz	50Hz	60Hz
602561	**MVSS 075/150-S02**	20	•	163	163	**104**	**149**	**1,02**	**1,46**	22,5	22,5	230	250	0,85	0,76	2,13	2,11
602647	**MVSS 075/260-S08**	35	•	275	275	**174**	**250**	**1,71**	**2,45**	34,5	34,5	375	410	0,81	0,80	2,22	2,38
602627	**MVSS 075/400-S08**	35	•	457	457	**288**	**415**	**2,83**	**4,07**	41,0	41,0	375	410	0,81	0,80	2,22	2,38
602620	**MVSS 075/660-S08**	40	•	723	723	**456**	**656**	**4,47**	**6,44**	54,0	54,0	400	450	1,20	1,20	2,38	2,58
602621	**MVSS 075/910-S08**	50	•	1012	1012	**637**	**917**	**6,25**	**9,00**	67,0	67,0	400	500	1,40	1,30	2,38	2,85
602622	**MVSS 075/1310-S08**	60	•	1464	1464	**922**	**1327**	**9,04**	**13,0**	94,0	94,0	950	1100	2,20	2,20	2,63	3,41
602567	**MVSS 075/2110-S02**	70	•	2326	2326	**1463**	**2107**	**14,4**	**20,7**	130	130	1500	1790	4,10	4,20	3,55	2,95

* Working moment = 2 x static moment.

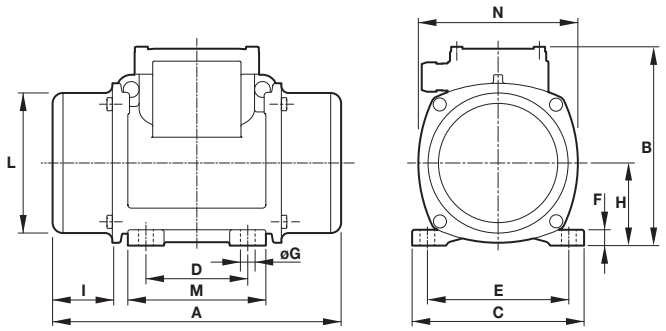

Fig. W

DIMENSIONAL SPECIFICATIONS (mm)

Type	Fig.	A	B	C	Holes D	Holes E	Holes ØG	Holes N°	F	H	I	L	M	N	Cable entry thread
MVSS 10/40-S02	**W**	255	176	152	**90**	**125**	**13**	**4**	14	73	54	124	122	141	M20x1,5
MVSS 10/100-S02	**W**	295	176	152	**90**	**125**	**13**	**4**	14	73	74	124	122	141	M20x1,5
MVSS 10/200-S02	**W**	340	200	167	**105**	**140**	**13**	**4**	15	82,5	91	143	137	160	M25x1,5
MVSS 10/310-S08	**W**	382	205	205	**120**	**170**	**17**	**4**	17	93,5	100	168	158	182	M25x1,5
MVSS 10/550-S02	**W**	434	232	205	**120**	**170**	**17**	**4**	20	104,5	117	181	162	203	M25x1,5
MVSS 10/810-S08	**W**	490(50Hz) 442(60Hz)	245	230	**140**	**190**	**17**	**4**	25	116	129(50Hz) 105(60Hz)	201	180	225	M25x1,5
MVSS 10/1110-S08	**W**	560	245	230	**140**	**190**	**17**	**4**	25	116	164	201	180	225	M25x1,5
MVSS 10/1400-S08	**W**	606(50Hz) 560(60Hz)	245	230	**140**	**190**	**17**	**4**	25	116	187(50Hz) 164(60Hz)	201	180	225	M25x1,5
MVSS 10/1610-S08	**W**	601(50Hz) 523(60Hz)	285	275	**155**	**225**	**22**	**4**	30	135	169(50Hz) 130(60Hz)	231	205	253	M25x1,5
MVSS 10/2100-S08	**W**	655(50Hz) 601(60Hz)	285	275	**155**	**225**	**22**	**4**	30	135	196(50Hz) 169(60Hz)	231	205	253	M25x1,5
MVSS 10/2610-S02	**W**	657(50Hz) 589(60Hz)	323	310	**155**	**255**	**23,5**	**4**	35	155	173,5(50Hz) 139,5(60Hz)	269	215	295	M25x1,5
MVSS 10/3000-S02	**W**	706	323	310	**155**	**255**	**23,5**	**4**	35	155	198	269	215	295	M25x1,5

DIMENSIONAL SPECIFICATIONS (mm)

Type	Fig.	A	B	C	Holes D	Holes E	Holes ØG	Holes N°	F	H	I	L	M	N	Cable entry thread
MVSS 075/150-S02	**W**	340	200	167	**105**	**140**	**13**	**4**	15	82,5	91	143	137	160	M25X1,5
MVSS 075/260-S08	**W**	354	232	205	**120**	**170**	**17**	**4**	20	104,5	77	181	162	182	M25X1,5
MVSS 075/400-S02	**W**	436	232	205	**120**	**170**	**17**	**4**	20	104,5	118	181	162	203	M25X1,5
MVSS 075/660-S08	**W**	490	245	230	**140**	**190**	**17**	**4**	25	116	129	201	180	225	M25X1,5
MVSS 075/910-S08	**W**	560	245	230	**140**	**190**	**17**	**4**	25	116	164	201	180	225	M25X1,5
MVSS 075/1310-S08	**W**	601	285	275	**155**	**225**	**22**	**4**	30	135	169	231	205	253	M25X1,5
MVSS 075/2110-S02	**W**	657	323	310	**155**	**255**	**23,5**	**4**	35	155	173,5	269	215	295	M25X1,5

Ia/In = ratio between start-up current and maximum current.