MVT/MVTX

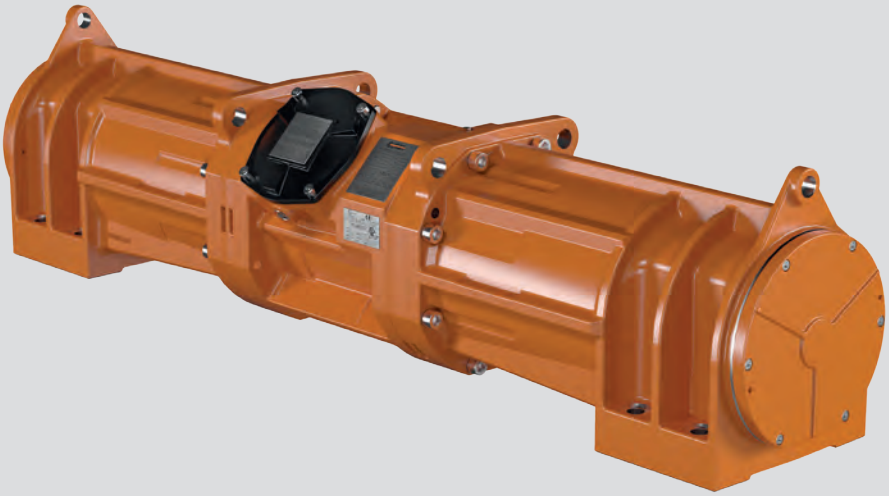

These vibrators are available both in the MVT standard version and in the MVTX explosion-proof version.

They are commonly used on screens in various industrial sectors and the MVTX version has been designed for environments with potentially explosive atmospheres with particular reference to the oil field.

MVTX series is characterised by increased thickness and joints to prevent transmission of an internal ignition source to the surrounding area.

Technical features

Power supply
Three-phase voltage up to 690V (maximum 600V for cULus), 50Hz or 60Hz (fixed) or variable frequency drive from 20Hz to the base frequency with constant torque load profile.

Polarity
4 poles typical. 2, 6, 8 poles are also available.

Conformity with Standards and Regulations
ATEX Directive 2014/34/UE;
EN/IEC 60079-0, EN/IEC 60079-1,
EN/IEC 60079-31, UL 674-886, CSA C22.2.
See also tables.

Controls
The components that affect protection mode are 100% accurately controlled and report is recorded for complete traceability.

Functioning
Continuous service (S1) at maximum declared centrifugal force and electric power. Intermittent services are also possible, for detailed information contact our technical assistance office.

Centrifugal force
Range extended to 7930 kgf. (77.8 kN), with centrifugal force adjustable by hand tools to find better screen performance.

Mechanical protection
IP66 according to IEC/EN 60529.

Protection against mechanical impacts
IK 08 according to IEC/EN 62262.

Insulation class
Class F (155°C).

Tropicalization
Standard on all screen vibrators with “drop by drop” trickle system.

Ambient temperature
From -20°C to +40°C.

Vibrator thermal protection
MVTX series equipped with130°C bimetallic thermal protector or, on request, with130° PTC thermistors. Thermal protection not included in MVT and MVTX-G series vibrators (available on request).

Fixing of the vibrator
Typical horizontal.

Lubrication
All vibrators are lubricated in the factory and do not require further lubrication at start-up.

Terminal box
Large terminal box to facilitate electrical connection. The terminal cover, with increased thickness, is designed to guarantee the seal with flame path joint for MVTX and MVTX-G series.

Electric motor
Three-phase asynchronous type.
Insulated windings using the “drop by drop” trickle system with Class H resin.
The rotor is die cast aluminum.

Casing
Made in three parts.
Central part in high-tensile aluminium alloy, external parts in
aluminum or spheroidal cast iron.

Bearing flange
In spheroidal or grey cast iron.
The geometry of the flange transmits the load to the casing uniformly.

Bearings
Custom made with particular geometry, especially designed for Italvibras, suitable to support both high radial and axial loads.

Motor shaft
Treated steel alloy (Isothermic hardening) resistant to stress.

The MVTX series is characterised by the cULus, ATEX, IECEx and EAC certifications.

The MVTX-G series is also derived from the MVTX series, specifically designed only for potentially explosive gas atmospheres, which are widely used on screen for drilling platforms and other applications.

The MVTX-G series is characterised by different temperature classes, see specifications alongside.





Approvals	series MVTX	series MVTX-G
c UL us	Class I, Groups CD. Class II, Groups EFG. Temp. Class T4 (135°C) (Amb. Temp. -20°C÷+40°C)	Class I, Groups CD. Temp. Class T3 (200°C) (Amb. Temp. -20°C÷+60°C)
Ex	ATEX II2G Ex d IIB 120°C Gb II 2D Ex tb IIIC T105°C Db (Amb. Temp. -20°C÷+40°C)	ATEX II2G Ex d IIB 150°C Gb (Amb. Temp. -20°C÷+60°C)
IECEx	Ex d IIB 105°C Gb Ex tb IIIC T105°C Db (Amb. Temp.-20°C÷+40°C)	Ex d IIB 150°C Gb (Amb. Temp. -20°C÷+60°C)
Notes	Version with Amb. Temp. -20°C to +60°C and other temperature classes is available.	Version with cULus temperature class 125°C (ATEX & IECEx) and T3C - 160°c (cULus) with thermal protection is available.

Eccentric weights
Allow adjustment of the centrifugal force as a percentage of the maximum.

Weight covers
In aluminum alloy.

Painting
Electrostatic surface treatment based on polymerised epoxy polyester powder in oven at 200°C.
Tested in salt spray for 500 hours.

Other features
The MVT and MVTX series are supplied without cable gland and with NPT threaded conduit opening.

Other mounting bolt patterns are available. For further details please contact sales offices at Italvibras.
The technical data and models listed in this catalogue are not binding. Italvibras reserves the right to modify them without prior notice.

Certifications

CE
Compliance with the applicable European Union directives.

c UL us
Certificate: E129825
Class I, Groups CD
Class II, Groups EFG
Temp. Class T4 (135°C)
UL Standard N°674-886, CSA C22.2

Ex
Certificate: DEMKO 12 ATEX 1103487X
II2D Ex tb IIIC T105°C Db
II2G Ex d IIB 105°C Gb
ATEX Directive 2014/34/UE
EN 60079-0, EN 60079-1, EN 60079-31

IECEx
Certificate: IECEx UL 11.0043X
Ex tb IIIC T105°C Db
Ex d IIB 105°C Gb
IEC 60079-0, IEC 60079-1, IEC 60079-31

EAC
Certification for Eurasian Customs Union
N° TC RU C-IT.ГБ08.B.02190

MVT / MVTX

4 poles - 1.500/1.800 rpm

Three-phase

DESCRIPTION			MECHANICAL SPECIFICATIONS								ELECTRICAL SPECIFICATIONS					
			Static moment* kgmm		Centrifugal force kg		Centrifugal force kN		Weight kg		Power rating W		Max. current A		Ia/In	
Code	Type	SIZE	50Hz	60Hz	50Hz	60Hz	50Hz	60Hz	50Hz	60Hz	50Hz	60Hz	400V 50Hz	460V 60Hz	50Hz	60Hz
601535	**MVT 15/3500-S08**	70	1369	951	**3450**	**3500**	**33,8**	**34,3**	169	158	2200	2500	3,90	3,90	7,11	6,92
601646	**MVT 15/4400-S08**	70	1750	1215	**4400**	**4400**	**43,2**	**43,2**	178	166	2200	2500	3,90	3,90	7,11	6,92
601537	**MVT 15/5000-S08**	80	1990	1387	**5007**	**5023**	**49,1**	**49,3**	235	220	3600	3400	6,00	5,00	7,02	8,00
601648	**MVT 15/7900-S08**	90	3147	2191	**7930**	**7930**	**77,8**	**77,8**	285	270	-	-	-	-	-	-

Three-phase

DESCRIPTION			Certifications				MECHANICAL SPECIFICATIONS								ELECTRICAL SPECIFICATIONS							
							Static moment* kgmm		Centrifugal force kg		Centrifugal force kN		Weight kg		Max input power W		Power rating W		Max. current A		Ia/In	
Codice	Type	SIZE					50Hz	60Hz	50Hz	60Hz	50Hz	60Hz	50Hz	60Hz	50Hz	60Hz	50Hz	60Hz	400V 50Hz	460V 60Hz	50Hz	60Hz
601573	**MVTX 15/3500-G/D**	70	•	•	•	•	1369	951	**3450**	**3500**	**33,8**	**34,3**	169	158	2270	2250	1840	1870	4,00	3,50	6,50	8,10
601649	**MVTX 15/4400-G/D**	70	•	•	•	•	1750	1215	**4400**	**4400**	**43,2**	**43,2**	178	166	2270	2250	1840	1870	4,00	3,50	6,50	8,10
601574	**MVTX 15/5000-G/D**	80	•	•	•	•	1990	1387	**5007**	**5023**	**49,1**	**49,3**	235	220	3140	3130	2600	2600	5,40	4,85	7,80	9,90
601575	**MVTX 15/7900-G/D**	90	•	•	•	•	3147	2191	**7930**	**7930**	**77,8**	**77,8**	285	270	3650	4000	3212	3520	6,50	6,20	7,70	8,90

* Working moment = 2 x static moment.

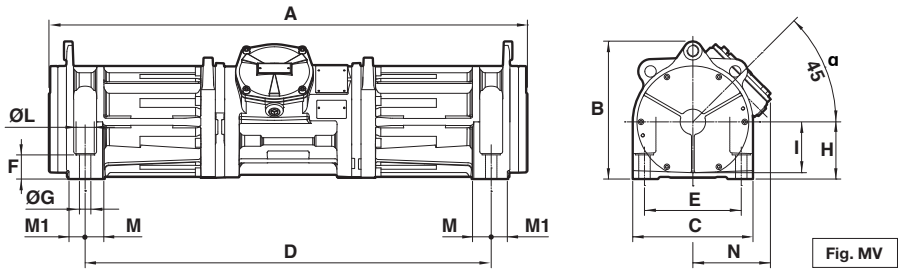

Fig. MV

DIMENSIONAL SPECIFICATIONS (mm)

					Holes														
Type	**Fig.**	**A**	**B**	**C**	**D**	**D1**	**E**	**ØG**	**N°**	**F**	**H**	**I**	**ØL**	**M**	**M1**	**N**	**N1**	**α**	**Cable entry**
MVT 15/3500-S08	**MV**	1130	325	284	**959**	**-**	**228,5**	**27**	**4**	57	135	120	43	44	38	184	-	45°	NPT 3/4”
MVT 15/3500-S08	**MV**	1130	325	284	**959**	**-**	**228,5**	**27**	**4**	57	135	120	43	44	38	184	-	45°	NPT 3/4”
MVT 15/5000-S08	**MV2**	1481	367	284	**1120**	**102**	**235**	**22**	**8**	58	160	120	40	-	46,5	194	307	45°	NPT 3/4”
MVT 15/7900-S08	**MV2**	1437	399	330	**800**	**240**	**280**	**22**	**8**	58	180	120	40	-	46,5	171	350	60°	NPT 3/4”

DIMENSIONAL SPECIFICATIONS (mm)

					Holes														
Type	**Fig.**	**A**	**B**	**C**	**D**	**D1**	**E**	**ØG**	**N°**	**F**	**H**	**I**	**ØL**	**M**	**M1**	**N**	**N1**	**α**	**Cable entry**
MVTX 15/3500-G/D	**MV**	1130	325	284	**959**	**-**	**228,5**	**27**	**4**	57	135	120	43	44	38	184	-	45°	NPT 3/4”
MVTX 15/4400-G/D	**MV**	1130	325	284	**959**	**-**	**228,5**	**27**	**4**	57	135	120	43	44	38	184	-	45°	NPT 3/4”
MVTX 15/5000-G/D	**MV2**	1481	367	284	**1120**	**102**	**235**	**22**	**8**	58	160	120	40	-	46,5	194	307	45°	NPT 3/4”
MVTX 15/7900-G/D	**MV2**	1437	399	330	**800**	**240**	**280**	**22**	**8**	58	180	120	40	-	46,5	171	350	60°	NPT 3/4”

Ia/In = ratio between start-up current and maximum current.

Several sizes are available with different mounting bolt patterns. Please contact sales office at Italvibras.

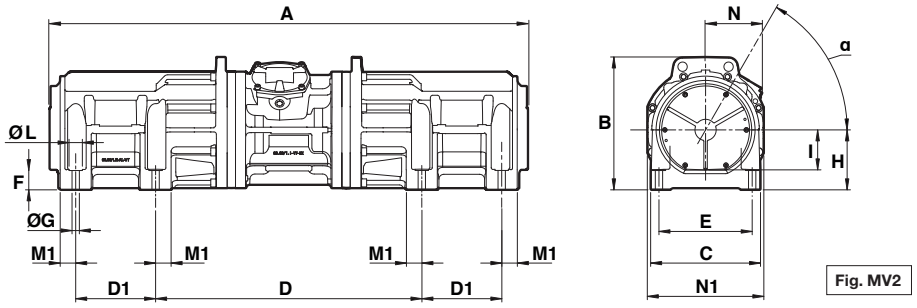

Fig. MV2