VR



Technical features

Functioning
VR rotational motion exciters have a spheroidal cast iron body, within which two bearings support a shaft with eccentric weights fitted at either end, generating the declared centrifugal force.
Static moment, thus centrifugal force, are adjustable by means of additional weight inserts in steel or lead.
Bearings are lubricated by oil bath, which must be inserted by the end user.
The typical application is with two VR exciters coupled together by means of a cardan shaft, with each VR fitted at either side of the machine.
They are available in executions 1U and 2U, with one joint and two joints respectively.
The rotation of the shaft of the exciter with two joints (2U) is obtained by means of an external drive, connecting to the shaft by means of a joint, generally a cardan (recommended).
The external drive can be an electric motor, or hydraulic or other, to be connected directly to the joint by means of belts and pulleys and can have variable speed in function of the exciter specifications.

Conformity to Directives
In the application field of the Machinery Directive 2006/42/EC, the VR rotational motion exciters can be considered as “partly completed machinery”.

Static moment
The total static moment of a pair of VR exciters varies from 4294 to 73440 kgmm depending on the model.
For each single model the static moment can be set thanks to the additional steel or lead inserts.

Centrifugal force
Up to 580 kN by pair of VR exciters.

Ambient temperature
From -40°C to +70°C.

Mounting position
VR exciters can be mounted with the shafts in horizontal position.

Lubrication
Oil bath lubricated bearings. Each exciter is supplied without oil which has to be inserted by the end user following relevant instructions as per Manual.

Driving system
The movement is transmitted by an external driving system coupled to the shaft of the 2U version VR by means of a joint, generally a Cardan (recommended).
The external driving system can be an electric motor, a hydraulic motor or other type of motor, directly coupled or by belts and pulleys.

Casing
In spheroidal cast iron.

Bearings
Spherical double crown roller bearings, high rated lifetime at maximum load.

Motor shaft
In treated steel alloy (isothermal hardening) resistant to stress.

Eccentric weights
Steel or cast iron eccentric weights, additional steel or lead insert weights.

Weight cover
The VR oscillators are equipped with one weight cover on the side which remain to the external to protect the rotating weight

Painting
Electrostatic surface treatment based on polymerised epoxy polyester powder in oven at 200°C. Tested in salt spray for 500 hours

The VR series of rotational motion exciters are designed for use in pairs, on vibrating machines or medium and large sizes.

The technical choices made in the design have allowed an excellent containment of noise as well as a long service life.

Centrifugal force setting is simple through the choice of additional insert weights.

With the VR exciters it is possible to obtain a unidirectional vibration with high values of centrifugal force by fitting two pairs of VR oscillators in parallel on the vibrating machine.

Other features
The VR Italvibras exciters are supplied with:
- coupling flange according to DIN standards on the shaft
- additional weights, based on the requested weight setting
- oil level inspection hole, magnetic plugs and breathing plug with valve
- technical handbook for use and maintenance.

On request Italvibras can supply the complete driving system, including joints, shaft extension and electric motor.

Different fixing distances can be available.
Contact Italvibras Sales Service.
Technical features and models mentioned in this catalogue are indicative and not binding. Italvibras reserves the right to modify them without any obligation.

VR

DESCRIPTION				SPECIFICATIONS						
					Static moment	Max RPM	Centrifugal force		Weight	Drive Motor Rating
Code	Execution	Type	SIZE	Weights Setting	kgmm		kg	kN	kg	kW
0605043	1U	**VR 5000/6-S08**	280	Min	4294	1500	**10800**	**106**	143+143	5,5
0605044	2U			Max	9693	1000	**10837**	**106**	171+171	
0605048	1U	**VR 8000/6-S08**	297	Min	8225	1600	**23525**	**231**	238+238	11
0605049	2U			Max	15545	1213	**25560**	**251**	271+271	
0605046	1U	**VR 10000/6-S08**	297	Min	10410	1444	**24260**	**238**	255+255	11
0605047	2U			Max	19700	1094	**26360**	**259**	296+296	
0605050	1U	**VR 11500/6-S08**	297	Min	12065	1354	**24730**	**243**	270+270	15
0605051	2U			Max	22875	1000	**25580**	**251**	318+318	
0605052	1U	**VR 14000/6-S08**	310	Min	17715	1334	**35220**	**346**	374+374	15
0605053	2U			Max	28045	1092	**37400**	**367**	415+415	
0605054	1U	**VR 17500/6-S08**	310	Min	18685	1303	**35470**	**348**	382+382	18,5
0605055	2U			Max	35175	1000	**39300**	**386**	450+450	
0605056	1U	**VR 19000/8-S08**	310	Min	20375	1255	**35870**	**352**	393+393	15 (8 poli)
0605057	2U			Max	38040	957	**38940**	**382**	465+465	
0605058	1U	**VR 27500/6-S08**	320	Min	39570	1074	**51030**	**501**	632+632	30
0605059	2U			Max	55155	980	**59200**	**581**	680+680	
0605060	1U	**VR 37000/8-S08**	320	Min	43580	1030	**51680**	**507**	659+659	30 (8 poli)
0605061	2U			Max	73440	820	**55200**	**542**	750+750	

* Working moment = 2 x static moment.

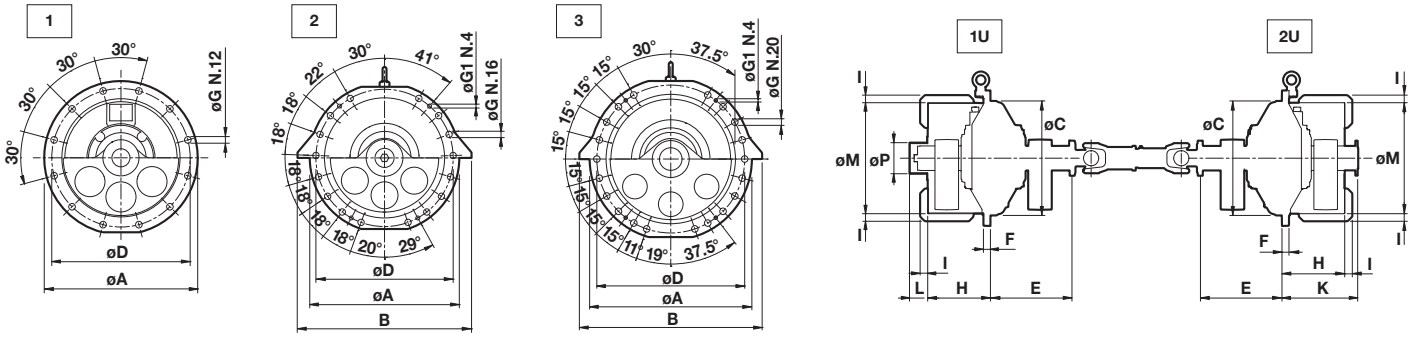

DIMENSIONAL SPECIFICATIONS (mm)

Type	Ref.	ØA	B	Fixing ØC	ØD	ØG	ØG1	E	F	H	I	K	L	ØM	ØP
VR 5000/6-S08	**1**	510	-	400	460	22	-	273	25	202	33	252	67	415	97
VR 8000/6-S08	**2**	610	710	490	560	26	16	329	30	248	33	305	78	473	133
VR 10000/6-S08	**2**	610	710	490	560	26	16	349	30	268	33	324	78	473	133
VR 11500/6-S08	**2**	610	710	490	560	26	16	364	30	286	33	339	78	473	133
VR 14000/6-S08	**2**	610	710	490	560	26	16	415	30	330	33	390	81	508	140
VR 17500/6-S08	**2**	610	710	490	560	26	16	415	30	330	33	390	81	508	140
VR 19000/8-S08	**2**	610	710	490	560	26	16	415	30	330	33	390	81	508	140
VR 27500/6-S08	**3**	790	890	630	720	32	16	464	35	366	33	432	83	620	163
VR 37000/8-S08	**3**	790	890	630	720	32	16	464	35	366	33	432	83	620	163