MOTOVARIO™

Contents

HA & BA Overview.....2
Catalog Notes.....4
HA Series.....7
Versions.....8
Nomenclature.....9
Mounting Positions.....10
Motor Positions.....10
Reducer Positions.....11
Input Types.....12
Gear Reducer Ratings.....16
Input Speed 1750 RPM.....16
Input Speed 1140 RPM.....20
Input Speed 875 RPM.....24
Gearmotor Ratings, 1750 RPM.....28
HA Series Dimensions.....38
Motor Mounting Dimensions.....60
BA Series.....63
Versions.....64
Nomenclature.....65
Mounting Positions.....66
Mounting Positions.....66
Terminal Box Positions.....66
Flange Positions.....66
Output Styles.....67
Direction of Rotation.....67
Input Types.....68
Gear Reducer Ratings.....70
Input Speed 1750 RPM.....70
Input Speed 1140 RPM.....72
Input Speed 875 RPM.....74
Input Speed 875 RPM.....74
Gearmotor Ratings, 1750 RPM.....76
BA Series Dimensions.....84
BA Series Torque Arm.....94
BA Series Shrink Disk.....95
Motor Mounting Dimensions.....96
AC Motors.....97
AC Motor Features.....98
AC Motor Accessories.....106
AC Motor Connections.....107
Brake Motors.....108
AC Motor Ratings.....114
AC Motor Dimensions.....118
Engineering and Technical Specifications.....127

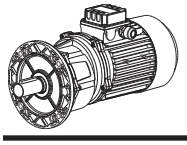

MOTOVARIO™

Motovario A Series

The Motovario HA and BA series of reducers were designed to offer competitive, lightweight units that remain suitable for high performance applications. The key to that performance is press-fit gearing and shafts that allow for higher output torques and shock loads. These aluminum reducers are completely maintenance free to reduce downtime and maintenance costs.

The Motovario HA and BA series offer several key features that reflect our goal of continuous improvement through innovation:

The Motovario approach to modularity continues throughout our aluminum line of reducers by utilizing the principles of standardized parts. The HA and BA units share gears, housing components, and input shafts to simplify the production process, aid in quality control, and improve delivery. This approach ultimately helps lower costs, shorten lead times, and increase product flexibility. The high speed and intermittent speed gears are shared by both the HA and BA series. Continuing the concept, all of the C-Face, free input, and compact motors are also shared by both series.

Motovario gearing is heat treated in-house, allowing a higher level of quality control over the finished product and a reduction in lead time.

Motovario aluminum units are offered in 1, 2, and 3 stages of reduction. This offers the customer a range of choices to help reduce weight and the amount of space needed for installation. The HA helical series has the option of being a 1, 2, or 3 stage unit, while the BA helical bevel series is available in a 2 or 3 stage configuration. A computerized assembly process allows the precise location of the bevel pinion, which ensures proper alignment with the bevel gear. This process allows Motovario to produce a 2 stage helical bevel gear set with the bevel set as the first stage.

Motovario reducers are finished with a polyester epoxy powder coat that is oven cured. The coating is applied on both the outside and inside of all housing components to ensure maximum performance. The machining of pilots and feet surfaces is completed after the coating process to insure accurate tolerances but allowing for maximum part coverage by the coating.

Motovario uses o-rings to seal the joints of all aluminum housing components to ensure a long lasting leak free seal.

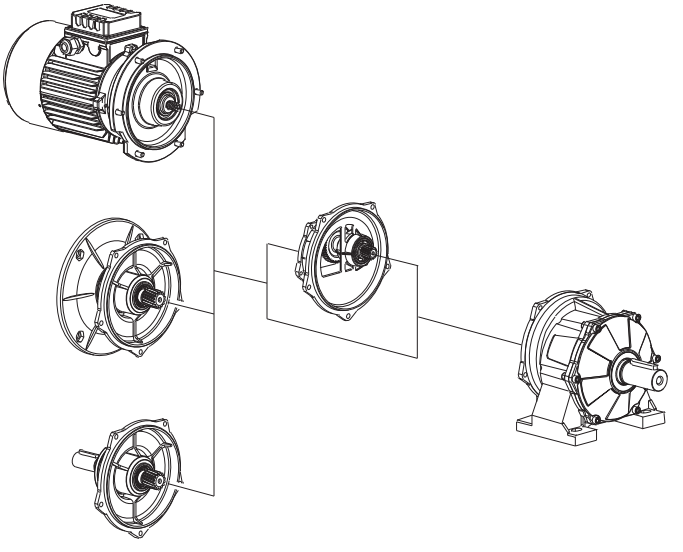

HA Modularity

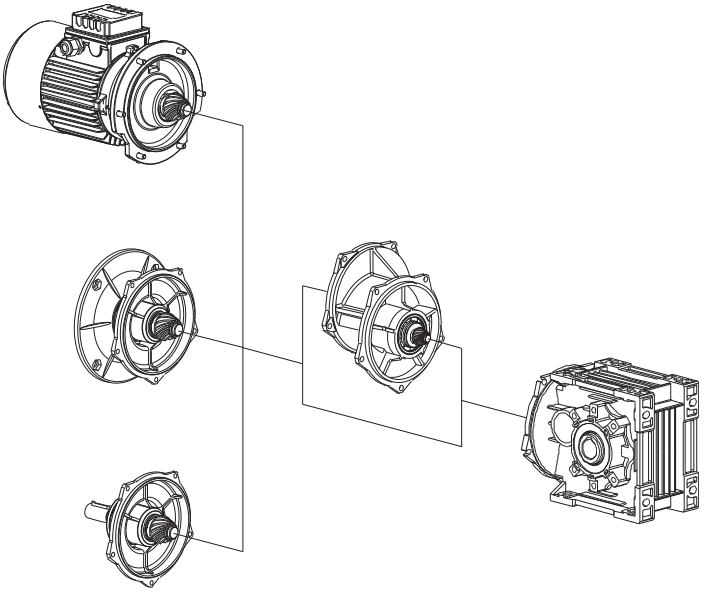

BA Modularity

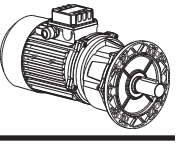

Motovario A Series

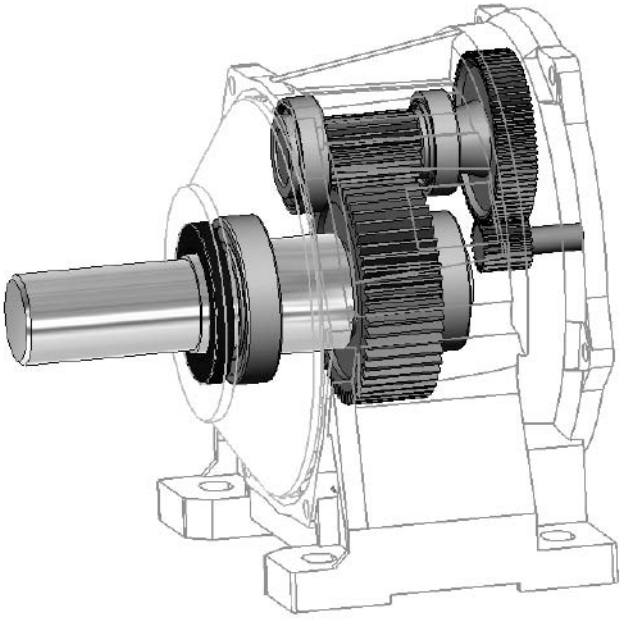

HA Series

Basic HA-BA Series Features

- Designed for continuous duty and use in harsh applications
- Gears and hollow output bores are carburized to a hardness of 58-60 RC
- Load Capacity calculated according to ISO 6336 and verified according to AGMA 2001-B88
- High-strength housings, input flanges, and output flanges of die-cast aluminum
- Housing components coated with heat-hardened polyester resin powder coat
- Single stage reducers with efficiencies up to 98% (in-line helical HA series only)
- Double and triple stage reducers with efficiencies up to 95%
- Foot mount, flange mount, shaft mount, foot/flange mount, and other configurations available

Models BA40 and BA50 are provided with a standard hollow output shaft. Plug in shaft kits are available to convert the hollow shaft to single or double solid outputs. This feature helps further reduce costs and lead time as well as allowing the customer to maintain a lower inventory level.

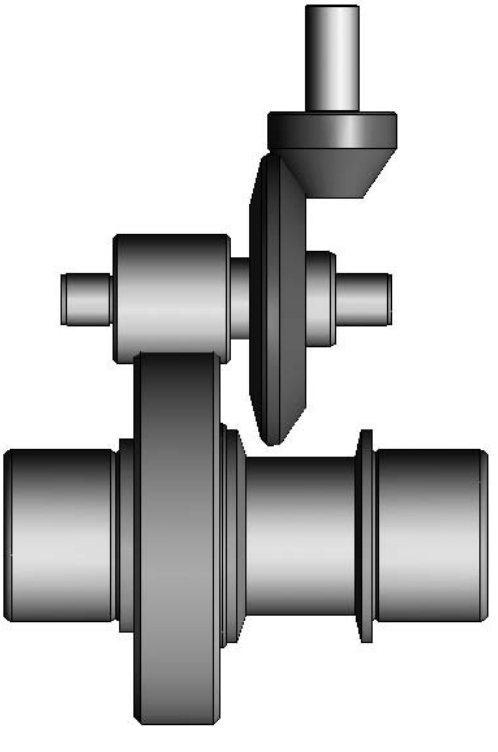

BA 2 Stage Helical Bevel Gears

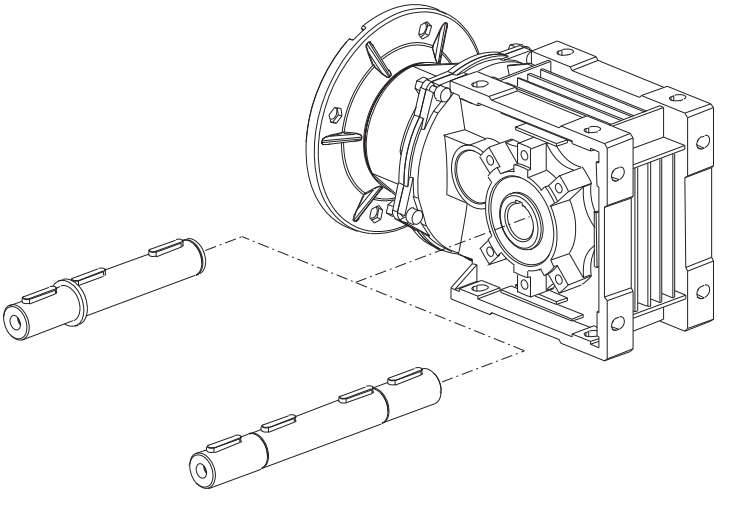

BA Plug In Shaft Kits

Catalog Notes/Special Applications

Power, Torque and Speed
Ratings and standard operating conditions are in reference to the reducer mounted in the standard horizontal position, B3 or similar, with the lubricant supplied by Motovario.

Output torque ratings are rounded to the nearest integer. Ratios are rounded to the nearest hundredth (0.00). More precise figures are available through Motovario.

Output speeds are rounded to the nearest integer. Speeds may vary slightly due to motor fluctuations or the application load applied. Ratings are in relation to the reducer's input speed.

Dimensions
Motovario reducer dimensions listed in this catalog are for standard reducers. Special applications and designs may change basic dimensions. Accessories and options are often listed as separate dimensions. Please refer to the specific accessories for dimensions.

Output flanges may be separate accessories and are referred to in Motovario nomenclature with the extension "FA." Reducers may have more than one output flange option. In that case, the extension identifies an additional output (FB, FC, etc.).

Dimensions of motors not supplied by Motovario may vary slightly. Please refer to the motor manufacturer for accurate dimensions and mounting configuration. Servo motors may require modified mounting configurations.

Certified dimensions and 1:1 scale drawings in electronic formats are available through Motovario.

Optional Design Features
Servo motor adapters
Special paint or coatings for added protection
Special output bores and shafts design
Please contact Motovario for your special design needs

Special Applications

Motovario reducers can be easily adapted for special environments. The reducer housings are rugged enough for most difficult applications without special preparation. Consider these options for your application:

Heavy Duty
Reducers
- No special preparation necessary

Motors:
- IP65 Enclosure Protection
- Added winding protection coat against moisture and humidity
- Added winding insulation
- Drain holes for moisture and condensation drainage
- Corrosion resistant hardware (standard)
- Blue RAL 5010 polyester-epoxy paint coating
- Metal terminal box cover

Washdown and Food Applications
Reducers:
- Painted with white epoxy paint or stainless-steel type paint
- Food-grade lubricant available
- Stainless-steel hollow output bore or shaft

Motors:
- IP65 Enclosure Protection
- Painted with white epoxy paint or stainless-steel type paint
- Metal terminal box cover

Harsh Environments
Reducers:
- Low- or high-temperature lubricant
- Viton® high-temperature resistant seals
- Extreme low-temperature seals

Motors:
- IP65 Enclosure Protection
- Added winding protection coat against moisture and humidity
- Added winding insulation
- Drain holes for moisture and condensation drainage
- Winding heaters for extremely low temperature applications
- Forced ventilation blower for high temperature or inverter drive applications
- Corrosion resistant hardware (standard)
- Blue RAL 5010 polyester-epoxy paint coating
- Metal terminal box cover

Descriptions

HA Series

Aluminum Housings
NEMA or IEC input quill
Inch or metric dimension input and output

CHA In-line helical gearmotor
HA In-line helical gear reducer with input quill
IHA In-line helical gear reducer with input shaft

Fx Output flange for in-line helical reducer
HAx1 In-line helical reducer, single stage
HAx2 In-line helical reducer, double stage
HAx3 In-line helical reducer, triple stage

BA Series

Aluminum Housings
NEMA or IEC input quill
Inch or metric dimension input and output

CBA Helical bevel gearmotor
BA Helical bevel gear reducer with input quill
IBA Helical bevel gear reducer with input shaft

C Hollow output bore for shaft mount
Fx Output flange for helical bevel reducer
S, D Single extension output shaft for helical bevel reducer, left or right extension
P Double extension output shaft for helical bevel reducer
M Shrink disk mounting for helical bevel reducer

Notes



CHA



HA



IHA

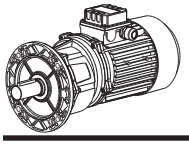

MOTOVARIO™

HA Versions

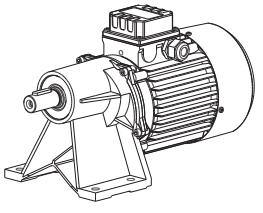	**Single Stage** Foot Mount A41 - A51 - A61
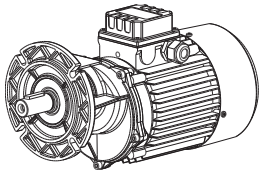	**Single Stage** Flange Mount A41F - A51F - A61F
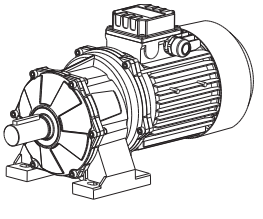	**Double / Triple Stage** Foot Mount A32 - A42 - A52 - A62 A33 - A43 - A53 - A63
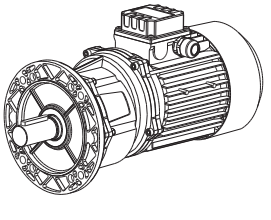	**Double / Triple Stage** Flange Mount A32F - A42F - A52F - A62F A33F - A43F - A53F - A63F

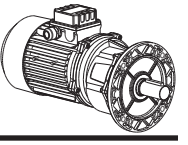

CHA	52	FB	16.91	T	90S4	Pos2	30mm	B3
1	2	3	4	5	6	7	8	9

1. Style

CHA

In-line Helical Gearmotor Motovario three-phase integral motor is permanently attached to the reducer. The motor and the reducer are supplied together.

HA

In-line Helical Gear Reducer with Input Quill C-face-type input flange allows the reducer to accept standard NEMA and IEC motors with c-face adapters. The motor is directly coupled to the reducer by an input quill. Motors are supplied separately from the gear reducers.

IHA

In-line Helical Gear Reducer with Input Shaft Inch-standard or metric dimensioned input shaft allows for standard sprocket or pulley attachment, direct motor coupling or other types of free input.

2. Size

One Stage Gear Reduction	A41	A51	A61	
Two Stage Reduction	A32	A42	A52	A62
Three Stage Reduction	A33	A43	A53	A63

3. Output Mounting Flange

FA, FB, FC In-line helical units have different output flange choices, depending on the size of the gear reducer. In-line units with output mounting flanges are a different body style than the standard foot mounted units. Please refer to the dimensional drawings for details, pages 38-59.

4. Reduction Ratio

The reduction ratio determines the output speed of the reducer. Ratios will vary depending on the size of the reducer. For a list of reduction ratios, please refer to pages 12-15 or 16-26.

5. Input Type

T

Three Phase Integral Motor CHA units are supplied with Motovario three-phase motors. Please check motor size compatibility on pages 12-15.

P

IEC Input Coupling HA units supplied with IEC standard motor inputs must specify the frame size of the mounted motor. HA units are available with the B5 or B14 style IEC input flange. Please check input flange availability on pages 12-15.

N

NEMA Input Coupling HA units supplied with NEMA standard c-face motor inputs must specify the frame size of the mounted motor. Please check input flange availability on pages 12-15.

UB

Input Shaft For IHA gear reducers, please specify the diameter of the input shaft in inches or millimeters. Input shaft sizes are specified on the gear reducer dimension pages, 38-59.

6. Integral Motor Description

Motor Frame Size, Power and Speed The motor frame size, power and speed must be specified when ordering a CHA style gearmotor. Please check the gearmotor ratings on pages 28-36 for gearmotor specifications.

or Input Frame Size The motor frame size, either IEC or NEMA, must be specified when ordering an HA style gear reducer. Please check with the motor supplier for the correct frame size.

7. Motor Mounting Position

Integral Motors The motor mounting position is specified only when ordering CHA style units. The motor mounting position indicates the position of the terminal box and the connection wire strain relief. Please refer to page 10 for motor mounting position specifications.

8. Output Shaft Diameter

Please specify the diameter of the output shaft in inches or millimeters. Output shaft sizes are specified on the gear reducer dimension pages, 38-59.

9. Reducer Mounting Position

The mounting position of the gear reducer or gearmotor must be specified when ordering for the proper lubrication amount. Please refer to page 10 for mounting positions.

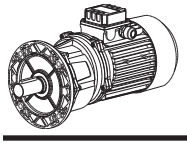

HA Series Features

Motovario HA Series uses standardized parts, shared gears, shafts, input sets and output flanges to improve torque and reliability. Key design features of the HA Series include:

- Press-fit, keyless gearing
- Maximum performance in harsh or stressful applications
- Hardened gears
- Efficiencies up to 98% in single-stage reducers
- Efficiencies up to 95% in double and triple stage reducers
- Foot or flange mount

HA Terminal Box Positions

Mounting position must be specified when ordering to provide the proper gear configuration and lubrication quantity. If mounting position is not specified, gear reducers are supplied in position B3/B5 (standard position).

The motor terminal box position must be specified, according to the diagram, when ordering gearmotors.
If terminal box position is not specified, the gearmotor is supplied with the terminal box in position 1.
Terminal box positions always relate to the gear reducer mounted in position B3/B5.
For vertical mounting positions, refer to the Critical Applications section of this catalog.
For positions not specified in this catalog, please contact Motovario.

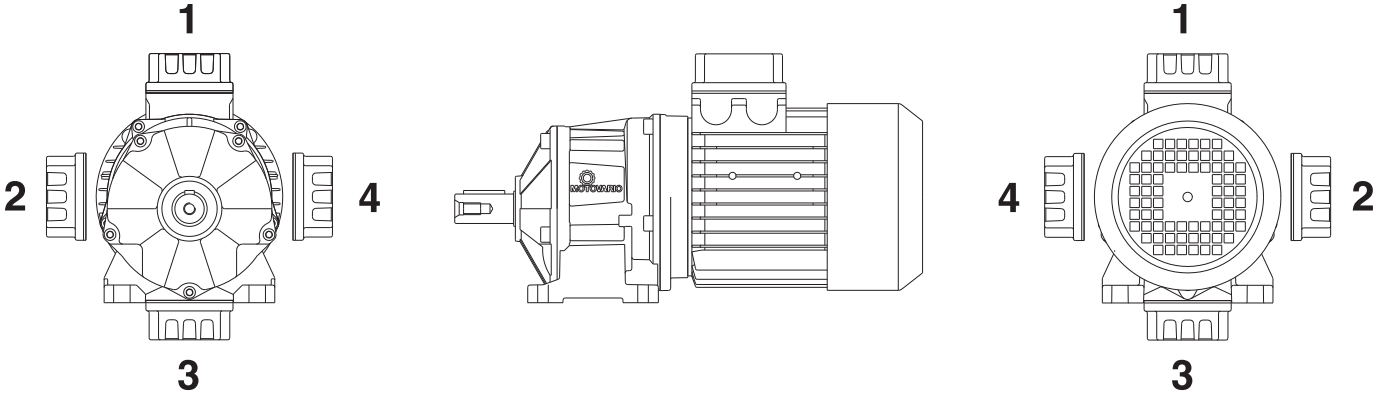

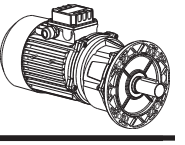

	HA...1	HA...2/3
B3	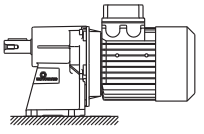	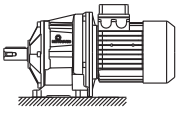
B5	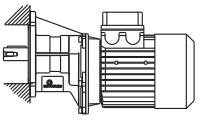	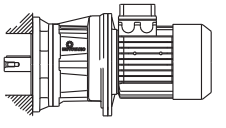
B6	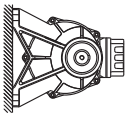	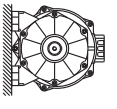
B7	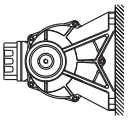	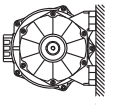
B8	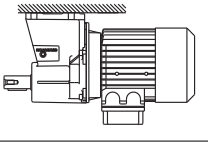	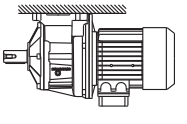
V5	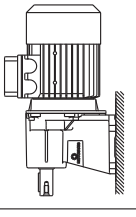	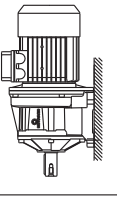
V1	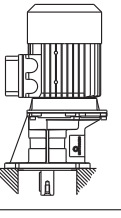	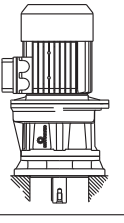
V6	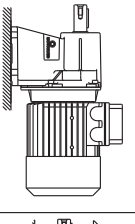	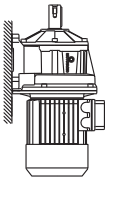
V3	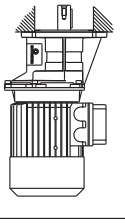	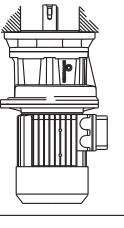

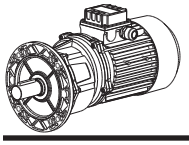

MOTOVARIO™

HA Input Types

CHA-HA 32

	NEMA		IEC		
i	56C	140TC	063	071	080
5.38			B5-B10	B5/B14-B10	B5/B14-B10
6.52			B5-B10	B5/B14-B10	B5/B14-B10
8.11			B5-B10	B5/B14-B10	B5/B14-B10
10.94			B5-B10	B5/B14-B10	B5/B14-B10
13.25			B5-B10	B5/B14-B10	B5/B14-B10
16.49			B5-B10	B5/B14-B10	B5/B14-B10
20.26			B5-B10	B5/B14-B10	B5/B14-B10
24.55			B5-B10	B5/B14-B10	B5/B14-B10
30.55			B5-B10	B5/B14-B10	B5/B14-B10
35.44			B5-B10	B5/B14-B10	
44.10			B5-B10	B5/B14-B10	
48.75			B5-B10	B5/B14-B10	
60.67			B5-B10	B5/B14-B10	

CHA-HA 33

	NEMA	IEC	
i	56C	063	071
51.32		B5-B10	B5/B14-B10
59.65		B5-B10	B5/B14-B10
72.27		B5-B10	B5/B14-B10
89.94		B5-B10	B5/B14-B10
110.51		B5-B10	B5/B14-B10
133.88		B5-B10	B5/B14-B10
166.61		B5-B10	B5/B14-B10
193.30		B5-B10	B5/B14-B10
240.55		B5-B10	B5/B14-B10
279.07		B5-B10	B5/B14-B10
347.29		B5-B10	B5/B14-B10

NEMA reducers available with C-face input only.
B5/B14: Indicates available IEC motor mounts.
B10: Indicates integral IEC motor is available.

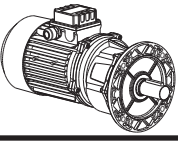

CHA-HA 41

	NEMA		IEC		
i	56C	140TC	063	071	080
1.45			B5-B10	B5/B14-B10	B5/B14-B10
2.94			B5-B10	B5/B14-B10	B5/B14-B10
4.75			B5-B10	B5/B14-B10	B5/B14-B10
5.45			B5-B10	B5/B14-B10	B5/B14-B10
7.88			B5-B10	B5/B14-B10	
10.83			B5-B10	B5/B14-B10	

CHA-HA 42

	NEMA		IEC			
i	56C	140TC	063	071	080	090
5.38			B5-B10	B5/B14-B10	B5/B14-B10	B5/B14-B10
6.52			B5-B10	B5/B14-B10	B5/B14-B10	B5/B14-B10
8.11			B5-B10	B5/B14-B10	B5/B14-B10	B5/B14-B10
10.94			B5-B10	B5/B14-B10	B5/B14-B10	B5/B14-B10
13.25			B5-B10	B5/B14-B10	B5/B14-B10	B5/B14-B10
16.49			B5-B10	B5/B14-B10	B5/B14-B10	B5/B14-B10
20.26			B5-B10	B5/B14-B10	B5/B14-B10	B5/B14-B10
24.55			B5-B10	B5/B14-B10	B5/B14-B10	B5/B14-B10
30.55			B5-B10	B5/B14-B10	B5/B14-B10	B5/B14-B10
35.44			B5-B10	B5/B14-B10		
44.10			B5-B10	B5/B14-B10		
48.75			B5-B10	B5/B14-B10		
60.67			B5-B10	B5/B14-B10		

CHA-HA 43

	NEMA	IEC	
i	56C	063	071
51.32		B5-B10	B5/B14-B10
59.65		B5-B10	B5/B14-B10
72.27		B5-B10	B5/B14-B10
89.94		B5-B10	B5/B14-B10
110.51		B5-B10	B5/B14-B10
133.88		B5-B10	B5/B14-B10
166.61		B5-B10	B5/B14-B10
193.30		B5-B10	B5/B14-B10
240.55		B5-B10	B5/B14-B10
279.07		B5-B10	B5/B14-B10
347.29		B5-B10	B5/B14-B10

NEMA reducers available with C-face input only.
B5/B14: Indicates available IEC motor mounts.
B10: Indicates integral IEC motor is available.

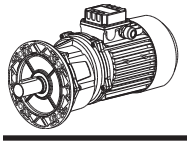

MOTOVARIO™

HA Input Types

CHA-HA 51

	NEMA		IEC			
i	56C	140TC	063	071	080	090
1.45			B5-B10	B5/B14-B10	B5/B14-B10	B5/B14-B10
2.94			B5-B10	B5/B14-B10	B5/B14-B10	B5/B14-B10
4.75			B5-B10	B5/B14-B10	B5/B14-B10	B5/B14-B10
5.45			B5-B10	B5/B14-B10	B5/B14-B10	B5/B14-B10
7.88			B5-B10	B5/B14-B10		
10.83			B5-B10	B5/B14-B10		

CHA-HA 52

	NEMA			IEC			
i	56C	140TC	180TC	080	090	100	112
5.14				B5/B14-B10	B5/B14-B10	B5/B14-B10	B5/B14-B10
6.22				B5/B14-B10	B5/B14-B10	B5/B14-B10	B5/B14-B10
7.73				B5/B14-B10	B5/B14-B10	B5/B14-B10	B5/B14-B10
9.64				B5/B14-B10	B5/B14-B10	B5/B14-B10	B5/B14-B10
11.67				B5/B14-B10	B5/B14-B10	B5/B14-B10	B5/B14-B10
14.50				B5/B14-B10	B5/B14-B10	B5/B14-B10	B5/B14-B10
16.91				B5/B14-B10	B5/B14-B10	B5/B14-B10	B5/B14-B10
20.46				B5/B14-B10	B5/B14-B10	B5/B14-B10	B5/B14-B10
25.43				B5/B14-B10	B5/B14-B10	B5/B14-B10	B5/B14-B10
29.89				B5/B14-B10	B5/B14-B10		
36.17				B5/B14-B10	B5/B14-B10		
44.95				B5/B14-B10	B5/B14-B10		
49.78				B5/B14-B10	B5/B14-B10		
61.87				B5/B14-B10	B5/B14-B10		

CHA-HA 53

	NEMA		IEC			
i	56C	140TC	063	071	080	090
49.80			B5-B10	B5/B14-B10	B5/B14-B10	B5/B14-B10
60.25			B5-B10	B5/B14-B10	B5/B14-B10	B5/B14-B10
74.88			B5-B10	B5/B14-B10	B5/B14-B10	B5/B14-B10
88.02			B5-B10	B5/B14-B10	B5/B14-B10	B5/B14-B10
111.61			B5-B10	B5/B14-B10	B5/B14-B10	B5/B14-B10
138.71			B5-B10	B5/B14-B10	B5/B14-B10	B5/B14-B10
163.05			B5-B10	B5/B14-B10	B5/B14-B10	B5/B14-B10
200.27			B5-B10	B5/B14-B10		
235.41			B5-B10	B5/B14-B10		
284.81			B5-B10	B5/B14-B10		
353.98			B5-B10	B5/B14-B10		

NEMA reducers available with C-face input only.
B5/B14: Indicates available IEC motor mounts.
B10: Indicates integral IEC motor is available.

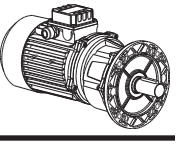

CHA-HA 61

	NEMA			IEC			
i	56C	140TC	180TC	080	090	100	112
1.33				B5/B14-B10	B5/B14-B10	B5/B14-B10	B5/B14-B10
2.50				B5/B14-B10	B5/B14-B10	B5/B14-B10	B5/B14-B10
4.38				B5/B14-B10	B5/B14-B10	B5/B14-B10	B5/B14-B10
7.75				B5/B14-B10	B5/B14-B10		
10.67				B5/B14-B10	B5/B14-B10		

CHA-HA 62

	NEMA			IEC			
i	56C	140TC	180TC	080	090	100	112
5.14							
6.22							
7.73							
9.64				B5/B14-B10	B5/B14-B10	B5/B14-B10	B5/B14-B10
11.67				B5/B14-B10	B5/B14-B10	B5/B14-B10	B5/B14-B10
14.50				B5/B14-B10	B5/B14-B10	B5/B14-B10	B5/B14-B10
16.91				B5/B14-B10	B5/B14-B10	B5/B14-B10	B5/B14-B10
20.46				B5/B14-B10	B5/B14-B10	B5/B14-B10	B5/B14-B10
25.43				B5/B14-B10	B5/B14-B10	B5/B14-B10	B5/B14-B10
29.89				B5/B14-B10	B5/B14-B10		
36.17				B5/B14-B10	B5/B14-B10		
44.95				B5/B14-B10	B5/B14-B10		
49.78				B5/B14-B10	B5/B14-B10		
61.87				B5/B14-B10	B5/B14-B10		

CHA-HA 63

	NEMA		IEC			
i	56C	140TC	063	071	080	090
49.80			B5-B10	B5/B14-B10	B5/B14-B10	B5/B14-B10
60.25			B5-B10	B5/B14-B10	B5/B14-B10	B5/B14-B10
74.88			B5-B10	B5/B14-B10	B5/B14-B10	B5/B14-B10
88.02			B5-B10	B5/B14-B10	B5/B14-B10	B5/B14-B10
111.61			B5-B10	B5/B14-B10	B5/B14-B10	B5/B14-B10
138.71			B5-B10	B5/B14-B10	B5/B14-B10	B5/B14-B10
163.05			B5-B10	B5/B14-B10	B5/B14-B10	B5/B14-B10
200.27			B5-B10	B5/B14-B10		
235.41			B5-B10	B5/B14-B10		
284.81			B5-B10	B5/B14-B10		
353.98			B5-B10	B5/B14-B10		

NEMA reducers available with C-face input only.
B5/B14: Indicates available IEC motor mounts.
B10: Indicates integral IEC motor is available.

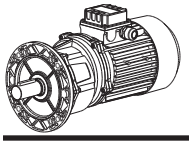

MOTOVARIO™

HA Gear Reducer Ratings – Input Speed 1750 RPM

Maximum Torque in lbs	Output Speed RPM	Exact Ratio i	Maximum Power HP	OHL Output Shaft lbs.	OHL Input Shaft lbs.	Gear Reducer Motorized Input	Gear Reducer Shaft Input
708	325	5.38	3.8	246	74	**HA32**	**IHA32**
708	269	6.52	3.1	263	92	**HA32**	**IHA32**
664	216	8.11	2.4	283	84	**HA32**	**IHA32**
796	160	10.94	2.1	312	99	**HA32**	**IHA32**
708	132	13.25	1.5	333	82	**HA32**	**IHA32**
708	106	16.49	1.2	358	89	**HA32**	**IHA32**
796	86	20.26	1.1	383	102	**HA32**	**IHA32**
752	71	24.55	0.9	409	87	**HA32**	**IHA32**
708	57	30.55	0.7	440	84	**HA32**	**IHA32**
796	49	35.44	0.7	449	108	**HA32**	**IHA32**
796	40	44.10	0.5	449	89	**HA32**	**IHA32**
708	36	48.75	0.4	449	89	**HA32**	**IHA32**
841	29	60.67	0.4	449	106	**HA32**	**IHA32**
885	34	51.32	0.5	449	106	**HA33**	**IHA33**
885	29	59.65	0.4	449	106	**HA33**	**IHA33**
885	24	72.27	0.4	449	106	**HA33**	**IHA33**
885	19	89.94	0.3	449	106	**HA33**	**IHA33**
885	16	110.51	0.2	449	106	**HA33**	**IHA33**
885	13	133.88	0.2	449	106	**HA33**	**IHA33**
885	11	166.61	0.2	449	106	**HA33**	**IHA33**
885	9.1	193.30	0.1	449	106	**HA33**	**IHA33**
885	7.3	240.55	0.1	449	106	**HA33**	**IHA33**
885	6.3	279.07	0.1	449	106	**HA33**	**IHA33**
885	5.0	347.29	0.1	449	106	**HA33**	**IHA33**
221	1208	1.45	4.4	115	74	**HA41**	**IHA41**
221	594	2.94	2.2	146	74	**HA41**	**IHA41**
265	368	4.75	1.6	171	74	**HA41**	**IHA41**
265	321	5.45	1.4	179	74	**HA41**	**IHA41**
221	222	7.88	0.8	202	74	**HA41**	**IHA41**
177	162	10.83	0.5	225	74	**HA41**	**IHA41**
1239	325	5.38	6.7	519	74	**HA42**	**IHA42**
1239	269	6.52	5.5	553	92	**HA42**	**IHA42**
1150	216	8.11	4.1	595	83	**HA42**	**IHA42**
1327	160	10.94	3.5	657	95	**HA42**	**IHA42**
1239	132	13.25	2.7	701	86	**HA42**	**IHA42**
1239	106	16.49	2.2	753	89	**HA42**	**IHA42**
1327	86	20.26	1.9	807	97	**HA42**	**IHA42**
1371	71	24.55	1.6	860	95	**HA42**	**IHA42**
1239	57	30.55	1.2	925	81	**HA42**	**IHA42**
1327	49	35.44	1.1	966	103	**HA42**	**IHA42**
1239	40	44.10	0.8	966	83	**HA42**	**IHA42**
1150	36	48.75	0.7	966	93	**HA42**	**IHA42**
1239	29	60.67	0.6	966	96	**HA42**	**IHA42**

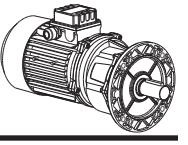

Gear Reducer Ratings – Input Speed 1750 RPM HA

Maximum Torque in lbs	Output Speed RPM	Exact Ratio i	Maximum Power HP	OHL Output Shaft lbs.	OHL Input Shaft lbs.	Gear Reducer Motorized Input	Gear Reducer Shaft Input
1327	34	51.32	0.8	966	96	**HA43**	**IHA43**
1327	29	59.65	0.7	966	96	**HA43**	**IHA43**
1327	24	72.27	0.5	966	92	**HA43**	**IHA43**
1327	19	89.94	0.4	966	89	**HA43**	**IHA43**
1327	16	110.51	0.4	966	91	**HA43**	**IHA43**
1327	13	133.88	0.3	966	92	**HA43**	**IHA43**
1327	11	166.61	0.2	966	89	**HA43**	**IHA43**
1327	9.1	193.30	0.2	966	96	**HA43**	**IHA43**
1327	7.3	240.55	0.2	966	89	**HA43**	**IHA43**
1327	6.3	279.07	0.1	966	96	**HA43**	**IHA43**
1327	5.0	347.29	0.1	966	89	**HA43**	**IHA43**
354	1208	1.45	7.0	317	74	**HA51**	**IHA51**
354	594	2.94	3.4	401	74	**HA51**	**IHA51**
442	368	4.75	2.7	471	74	**HA51**	**IHA51**
442	321	5.45	2.3	493	74	**HA51**	**IHA51**
354	222	7.88	1.3	557	74	**HA51**	**IHA51**
221	162	10.83	0.6	620	74	**HA51**	**IHA51**
2124	340	5.14	11.9	639	117	**HA52**	**IHA52**
2124	281	6.22	9.9	681	145	**HA52**	**IHA52**
2124	226	7.73	7.9	732	141	**HA52**	**IHA52**
2654	181	9.64	8.0	788	176	**HA52**	**IHA52**
2477	150	11.67	6.1	839	135	**HA52**	**IHA52**
2477	121	14.50	4.9	902	141	**HA52**	**IHA52**
2654	103	16.91	4.5	950	161	**HA52**	**IHA52**
2566	86	20.46	3.6	1012	140	**HA52**	**IHA52**
2477	69	25.43	2.8	1088	136	**HA52**	**IHA52**
2654	59	29.89	2.6	1148	160	**HA52**	**IHA52**
2654	48	36.17	2.1	1224	145	**HA52**	**IHA52**
2477	39	44.95	1.6	1316	132	**HA52**	**IHA52**
2654	35	49.78	1.5	1348	170	**HA52**	**IHA52**
2566	28	61.87	1.2	1348	137	**HA52**	**IHA52**
2654	35	49.80	1.6	1348	74	**HA53**	**IHA53**
2654	29	60.25	1.3	1348	92	**HA53**	**IHA53**
2654	23	74.88	1.0	1348	90	**HA53**	**IHA53**
2654	20	88.02	0.9	1348	95	**HA53**	**IHA53**
2654	16	111.61	0.7	1348	88	**HA53**	**IHA53**
2654	13	138.71	0.6	1348	90	**HA53**	**IHA53**
2654	11	163.05	0.5	1348	95	**HA53**	**IHA53**
2654	8.7	200.27	0.4	1348	91	**HA53**	**IHA53**
2654	7.4	235.41	0.3	1348	95	**HA53**	**IHA53**
2654	6.1	284.81	0.3	1348	92	**HA53**	**IHA53**
2654	4.9	353.98	0.2	1348	90	**HA53**	**IHA53**

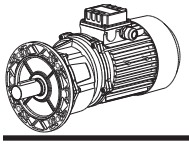

MOTOVARIO™

HA Gear Reducer Ratings – Input Speed 1750 RPM

Maximum Torque in lbs	Output Speed RPM	Exact Ratio i	Maximum Power HP	OHL Output Shaft lbs.	OHL Input Shaft lbs.	Gear Reducer Motorized Input	Gear Reducer Shaft Input
796	1313	1.33	17.1	461	124	**HA61**	**IHA61**
796	700	2.50	9.1	569	124	**HA61**	**IHA61**
973	399	4.38	6.4	686	124	**HA61**	**IHA61**
796	226	7.75	2.9	830	124	**HA61**	**IHA61**
619	164	10.67	1.7	923	124	**HA61**	**IHA61**
3362	340	5.14	18.9	943	117	**HA62**	**IHA62**
3362	281	6.22	15.6	1005	145	**HA62**	**IHA62**
3362	226	7.73	12.6	1080	141	**HA62**	**IHA62**
4070	181	9.64	12.2	1163	170	**HA62**	**IHA62**
3893	150	11.67	9.7	1239	139	**HA62**	**IHA62**
3716	121	14.50	7.4	1332	135	**HA62**	**IHA62**
4424	103	16.91	7.6	1402	179	**HA62**	**IHA62**
4070	86	20.46	5.8	1494	133	**HA62**	**IHA62**
3805	69	25.43	4.3	1606	132	**HA62**	**IHA62**
3982	59	29.89	3.9	1695	156	**HA62**	**IHA62**
4159	48	36.17	3.3	1798	152	**HA62**	**IHA62**
3893	39	44.95	2.5	1798	132	**HA62**	**IHA62**
3274	35	49.78	1.9	1798	133	**HA62**	**IHA62**
3893	28	61.87	1.8	1798	168	**HA62**	**IHA62**
4247	35	49.80	2.5	1798	74	**HA63**	**IHA63**
4247	29	60.25	2.1	1798	92	**HA63**	**IHA63**
4247	23	74.88	1.7	1798	90	**HA63**	**IHA63**
4247	20	88.02	1.4	1798	95	**HA63**	**IHA63**
4247	16	111.61	1.1	1798	88	**HA63**	**IHA63**
4247	13	138.71	0.9	1798	90	**HA63**	**IHA63**
4247	11	163.05	0.8	1798	95	**HA63**	**IHA63**
4247	8.7	200.27	0.6	1798	91	**HA63**	**IHA63**
4247	7.4	235.41	0.5	1798	95	**HA63**	**IHA63**
4247	6.1	284.81	0.4	1798	92	**HA63**	**IHA63**
4247	4.9	353.98	0.4	1798	90	**HA63**	**IHA63**

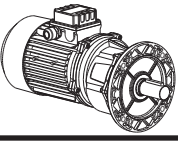

Notes HA

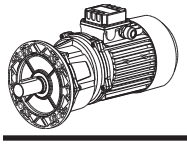

MOTOVARIO™

HA Gear Reducer Ratings – Input Speed 1140 RPM

Maximum Torque in lbs	Output Speed RPM	Exact Ratio i	Maximum Power HP	OHL Output Shaft lbs.	OHL Input Shaft lbs.	Gear Reducer Motorized Input	Gear Reducer Shaft Input
708	212	5.38	2.5	246	74	**HA32**	**IHA32**
708	175	6.52	2.0	263	92	**HA32**	**IHA32**
664	141	8.11	1.5	283	84	**HA32**	**IHA32**
796	104	10.94	1.4	312	99	**HA32**	**IHA32**
708	86	13.25	1.0	333	82	**HA32**	**IHA32**
708	69	16.49	0.8	358	89	**HA32**	**IHA32**
796	56	20.26	0.7	383	102	**HA32**	**IHA32**
752	46	24.55	0.6	409	87	**HA32**	**IHA32**
708	37	30.55	0.4	440	84	**HA32**	**IHA32**
796	32	35.44	0.4	449	108	**HA32**	**IHA32**
796	26	44.10	0.3	449	89	**HA32**	**IHA32**
708	23	48.75	0.3	449	89	**HA32**	**IHA32**
841	19	60.67	0.3	449	106	**HA32**	**IHA32**
885	22	51.32	0.3	449	106	**HA33**	**IHA33**
885	19	59.65	0.3	449	106	**HA33**	**IHA33**
885	16	72.27	0.2	449	106	**HA33**	**IHA33**
885	13	89.94	0.2	449	106	**HA33**	**IHA33**
885	10	110.51	0.2	449	106	**HA33**	**IHA33**
885	8.5	133.88	0.1	449	106	**HA33**	**IHA33**
885	6.8	166.61	0.1	449	106	**HA33**	**IHA33**
885	5.9	193.30	0.1	449	106	**HA33**	**IHA33**
885	4.7	240.55	0.1	449	106	**HA33**	**IHA33**
885	4.1	279.07	0.1	449	106	**HA33**	**IHA33**
885	3.3	347.29	0.0	449	106	**HA33**	**IHA33**
221	787	1.45	2.8	115	74	**HA41**	**IHA41**
221	387	2.94	1.4	146	74	**HA41**	**IHA41**
265	240	4.75	1.0	171	74	**HA41**	**IHA41**
265	209	5.45	0.9	179	74	**HA41**	**IHA41**
221	145	7.88	0.5	202	74	**HA41**	**IHA41**
177	105	10.83	0.3	225	74	**HA41**	**IHA41**
1239	212	5.38	4.3	519	74	**HA42**	**IHA42**
1239	175	6.52	3.6	553	92	**HA42**	**IHA42**
1150	141	8.11	2.7	595	83	**HA42**	**IHA42**
1327	104	10.94	2.3	657	95	**HA42**	**IHA42**
1239	86	13.25	1.8	701	86	**HA42**	**IHA42**
1239	69	16.49	1.4	753	89	**HA42**	**IHA42**
1327	56	20.26	1.2	807	97	**HA42**	**IHA42**
1371	46	24.55	1.1	860	95	**HA42**	**IHA42**
1239	37	30.55	0.8	925	81	**HA42**	**IHA42**
1327	32	35.44	0.7	966	103	**HA42**	**IHA42**
1239	26	44.10	0.5	966	83	**HA42**	**IHA42**
1150	23	48.75	0.4	966	93	**HA42**	**IHA42**
1239	19	60.67	0.4	966	96	**HA42**	**IHA42**

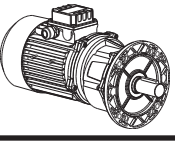

Gear Reducer Ratings – Input Speed 1140 RPM HA

Maximum Torque in lbs	Output Speed RPM	Exact Ratio i	Maximum Power HP	OHL Output Shaft lbs.	OHL Input Shaft lbs.	Gear Reducer Motorized Input	Gear Reducer Shaft Input
1327	22	51.32	0.5	966	96	**HA43**	**IHA43**
1327	19	59.65	0.4	966	96	**HA43**	**IHA43**
1327	16	72.27	0.4	966	92	**HA43**	**IHA43**
1327	13	89.94	0.3	966	89	**HA43**	**IHA43**
1327	10	110.51	0.2	966	91	**HA43**	**IHA43**
1327	8.5	133.88	0.2	966	92	**HA43**	**IHA43**
1327	6.8	166.61	0.2	966	89	**HA43**	**IHA43**
1327	5.9	193.30	0.1	966	96	**HA43**	**IHA43**
1327	4.7	240.55	0.1	966	89	**HA43**	**IHA43**
1327	4.1	279.07	0.1	966	96	**HA43**	**IHA43**
1327	3.3	347.29	0.1	966	89	**HA43**	**IHA43**
354	787	1.45	4.6	317	74	**HA51**	**IHA51**
354	387	2.94	2.2	401	74	**HA51**	**IHA51**
442	240	4.75	1.7	471	74	**HA51**	**IHA51**
442	209	5.45	1.5	493	74	**HA51**	**IHA51**
354	145	7.88	0.8	557	74	**HA51**	**IHA51**
221	105	10.83	0.4	620	74	**HA51**	**IHA51**
2124	222	5.14	7.8	639	117	**HA52**	**IHA52**
2124	183	6.22	6.4	681	145	**HA52**	**IHA52**
2124	147	7.73	5.2	732	141	**HA52**	**IHA52**
2654	118	9.64	5.2	788	176	**HA52**	**IHA52**
2477	98	11.67	4.0	839	135	**HA52**	**IHA52**
2477	79	14.50	3.2	902	141	**HA52**	**IHA52**
2654	67	16.91	3.0	950	161	**HA52**	**IHA52**
2566	56	20.46	2.4	1012	140	**HA52**	**IHA52**
2477	45	25.43	1.8	1088	136	**HA52**	**IHA52**
2654	38	29.89	1.7	1148	160	**HA52**	**IHA52**
2654	32	36.17	1.4	1224	145	**HA52**	**IHA52**
2477	25	44.95	1.0	1316	132	**HA52**	**IHA52**
2654	23	49.78	1.0	1348	170	**HA52**	**IHA52**
2566	18	61.87	0.8	1348	137	**HA52**	**IHA52**
2654	23	49.80	1.0	1348	74	**HA53**	**IHA53**
2654	19	60.25	0.8	1348	92	**HA53**	**IHA53**
2654	15	74.88	0.7	1348	90	**HA53**	**IHA53**
2654	13	88.02	0.6	1348	95	**HA53**	**IHA53**
2654	10	111.61	0.5	1348	88	**HA53**	**IHA53**
2654	8.2	138.71	0.4	1348	90	**HA53**	**IHA53**
2654	7.0	163.05	0.3	1348	95	**HA53**	**IHA53**
2654	5.7	200.27	0.3	1348	91	**HA53**	**IHA53**
2654	4.8	235.41	0.2	1348	95	**HA53**	**IHA53**
2654	4.0	284.81	0.2	1348	92	**HA53**	**IHA53**
2654	3.2	353.98	0.1	1348	90	**HA53**	**IHA53**

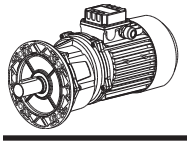

MOTOVARIO™

HA Gear Reducer Ratings – Input Speed 1140 RPM

Maximum Torque in lbs	Output Speed RPM	Exact Ratio i	Maximum Power HP	OHL Output Shaft lbs.	OHL Input Shaft lbs.	Gear Reducer Motorized Input	Gear Reducer Shaft Input
796	855	1.33	11.1	461	124	**HA61**	**IHA61**
796	456	2.50	5.9	569	124	**HA61**	**IHA61**
973	260	4.38	4.1	686	124	**HA61**	**IHA61**
796	147	7.75	1.9	830	124	**HA61**	**IHA61**
619	107	10.67	1.1	923	124	**HA61**	**IHA61**
3362	222	5.14	12.3	943	117	**HA62**	**IHA62**
3362	183	6.22	10.2	1005	145	**HA62**	**IHA62**
3362	147	7.73	8.2	1080	141	**HA62**	**IHA62**
4070	118	9.64	8.0	1163	170	**HA62**	**IHA62**
3893	98	11.67	6.3	1239	139	**HA62**	**IHA62**
3716	79	14.50	4.8	1332	135	**HA62**	**IHA62**
4424	67	16.91	4.9	1402	179	**HA62**	**IHA62**
4070	56	20.46	3.7	1494	133	**HA62**	**IHA62**
3805	45	25.43	2.8	1606	132	**HA62**	**IHA62**
3982	38	29.89	2.5	1695	156	**HA62**	**IHA62**
4159	32	36.17	2.2	1798	152	**HA62**	**IHA62**
3893	25	44.95	1.6	1798	132	**HA62**	**IHA62**
3274	23	49.78	1.2	1798	133	**HA62**	**IHA62**
3893	18	61.87	1.2	1798	168	**HA62**	**IHA62**
4247	23	49.80	1.6	1798	74	**HA63**	**IHA63**
4247	19	60.25	1.4	1798	92	**HA63**	**IHA63**
4247	15	74.88	1.1	1798	90	**HA63**	**IHA63**
4247	13	88.02	0.9	1798	95	**HA63**	**IHA63**
4247	10	111.61	0.7	1798	88	**HA63**	**IHA63**
4247	8.2	138.71	0.6	1798	90	**HA63**	**IHA63**
4247	7.0	163.05	0.5	1798	95	**HA63**	**IHA63**
4247	5.7	200.27	0.4	1798	91	**HA63**	**IHA63**
4247	4.8	235.41	0.3	1798	95	**HA63**	**IHA63**
4247	4.0	284.81	0.3	1798	92	**HA63**	**IHA63**
4247	3.2	353.98	0.2	1798	90	**HA63**	**IHA63**

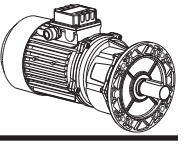

Notes HA

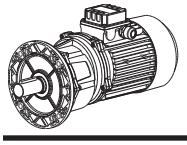

MOTOVARIO™

HA Gear Reducer Ratings – Input Speed 875 RPM

Maximum Torque in lbs	Output Speed RPM	Exact Ratio i	Maximum Power HP	OHL Output Shaft lbs.	OHL Input Shaft lbs.	Gear Reducer Motorized Input	Gear Reducer Shaft Input
708	163	5.38	1.9	246	74	**HA32**	**IHA32**
708	134	6.52	1.6	263	92	**HA32**	**IHA32**
664	108	8.11	1.2	283	84	**HA32**	**IHA32**
796	80	10.94	1.1	312	99	**HA32**	**IHA32**
708	66	13.25	0.8	333	82	**HA32**	**IHA32**
708	53	16.49	0.6	358	89	**HA32**	**IHA32**
796	43	20.26	0.6	383	102	**HA32**	**IHA32**
752	36	24.55	0.4	409	87	**HA32**	**IHA32**
708	29	30.55	0.3	440	84	**HA32**	**IHA32**
796	25	35.44	0.3	449	108	**HA32**	**IHA32**
796	20	44.10	0.3	449	89	**HA32**	**IHA32**
708	18	48.75	0.2	449	89	**HA32**	**IHA32**
841	14	60.67	0.2	449	106	**HA32**	**IHA32**
885	17	51.32	0.3	449	106	**HA33**	**IHA33**
885	15	59.65	0.2	449	106	**HA33**	**IHA33**
885	12	72.27	0.2	449	106	**HA33**	**IHA33**
885	9.7	89.94	0.1	449	106	**HA33**	**IHA33**
885	7.9	110.51	0.1	449	106	**HA33**	**IHA33**
885	6.5	133.88	0.1	449	106	**HA33**	**IHA33**
885	5.3	166.61	0.1	449	106	**HA33**	**IHA33**
885	4.5	193.30	0.1	449	106	**HA33**	**IHA33**
885	3.6	240.55	0.1	449	106	**HA33**	**IHA33**
885	3.1	279.07	0.0	449	106	**HA33**	**IHA33**
885	2.5	347.29	0.0	449	106	**HA33**	**IHA33**
221	604	1.45	2.2	115	74	**HA41**	**IHA41**
221	297	2.94	1.1	146	74	**HA41**	**IHA41**
265	184	4.75	0.8	171	74	**HA41**	**IHA41**
265	160	5.45	0.7	179	74	**HA41**	**IHA41**
221	111	7.88	0.4	202	74	**HA41**	**IHA41**
177	81	10.83	0.2	225	74	**HA41**	**IHA41**
1239	163	5.38	3.3	519	74	**HA42**	**IHA42**
1239	134	6.52	2.7	553	92	**HA42**	**IHA42**
1150	108	8.11	2.1	595	83	**HA42**	**IHA42**
1327	80	10.94	1.8	657	95	**HA42**	**IHA42**
1239	66	13.25	1.4	701	86	**HA42**	**IHA42**
1239	53	16.49	1.1	753	89	**HA42**	**IHA42**
1327	43	20.26	0.9	807	97	**HA42**	**IHA42**
1371	36	24.55	0.8	860	95	**HA42**	**IHA42**
1239	29	30.55	0.6	925	81	**HA42**	**IHA42**
1327	25	35.44	0.5	966	103	**HA42**	**IHA42**
1239	20	44.10	0.4	966	83	**HA42**	**IHA42**
1150	18	48.75	0.3	966	93	**HA42**	**IHA42**
1239	14	60.67	0.3	966	96	**HA42**	**IHA42**

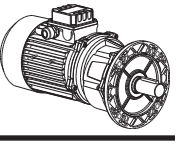

Gear Reducer Ratings – Input Speed 875 RPM HA

Maximum Torque in lbs	Output Speed RPM	Exact Ratio i	Maximum Power HP	OHL Output Shaft lbs.	OHL Input Shaft lbs.	Gear Reducer Motorized Input	Gear Reducer Shaft Input
1327	17	51.32	0.4	966	96	**HA43**	**IHA43**
1327	15	59.65	0.3	966	96	**HA43**	**IHA43**
1327	12	72.27	0.3	966	92	**HA43**	**IHA43**
1327	9.7	89.94	0.2	966	89	**HA43**	**IHA43**
1327	7.9	110.51	0.2	966	91	**HA43**	**IHA43**
1327	6.5	133.88	0.1	966	92	**HA43**	**IHA43**
1327	5.3	166.61	0.1	966	89	**HA43**	**IHA43**
1327	4.5	193.30	0.1	966	96	**HA43**	**IHA43**
1327	3.6	240.55	0.1	966	89	**HA43**	**IHA43**
1327	3.1	279.07	0.1	966	96	**HA43**	**IHA43**
1327	2.5	347.29	0.1	966	89	**HA43**	**IHA43**
354	604	1.45	3.5	317	74	**HA51**	**IHA51**
354	297	2.94	1.7	401	74	**HA51**	**IHA51**
442	184	4.75	1.3	471	74	**HA51**	**IHA51**
442	160	5.45	1.2	493	74	**HA51**	**IHA51**
354	111	7.88	0.6	557	74	**HA51**	**IHA51**
221	81	10.83	0.3	620	74	**HA51**	**IHA51**
2124	170	5.14	6.0	639	117	**HA52**	**IHA52**
2124	141	6.22	4.9	681	145	**HA52**	**IHA52**
2124	113	7.73	4.0	732	141	**HA52**	**IHA52**
2654	91	9.64	4.0	788	176	**HA52**	**IHA52**
2477	75	11.67	3.1	839	135	**HA52**	**IHA52**
2477	60	14.50	2.5	902	141	**HA52**	**IHA52**
2654	52	16.91	2.3	950	161	**HA52**	**IHA52**
2566	43	20.46	1.8	1012	140	**HA52**	**IHA52**
2477	34	25.43	1.4	1088	136	**HA52**	**IHA52**
2654	29	29.89	1.3	1148	160	**HA52**	**IHA52**
2654	24	36.17	1.1	1224	145	**HA52**	**IHA52**
2477	19	44.95	0.8	1316	132	**HA52**	**IHA52**
2654	18	49.78	0.8	1348	170	**HA52**	**IHA52**
2566	14	61.87	0.6	1348	137	**HA52**	**IHA52**
2654	18	49.80	0.8	1348	74	**HA53**	**IHA53**
2654	15	60.25	0.7	1348	92	**HA53**	**IHA53**
2654	12	74.88	0.5	1348	90	**HA53**	**IHA53**
2654	9.9	88.02	0.4	1348	95	**HA53**	**IHA53**
2654	7.8	111.61	0.4	1348	88	**HA53**	**IHA53**
2654	6.3	138.71	0.3	1348	90	**HA53**	**IHA53**
2654	5.4	163.05	0.2	1348	95	**HA53**	**IHA53**
2654	4.4	200.27	0.2	1348	91	**HA53**	**IHA53**
2654	3.7	235.41	0.2	1348	95	**HA53**	**IHA53**
2654	3.1	284.81	0.1	1348	92	**HA53**	**IHA53**
2654	2.5	353.98	0.1	1348	90	**HA53**	**IHA53**

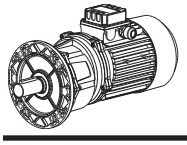

MOTOVARIO™

HA Gear Reducer Ratings – Input Speed 875 RPM

Maximum Torque in lbs	Output Speed RPM	Exact Ratio i	Maximum Power HP	OHL Output Shaft lbs.	OHL Input Shaft lbs.	Gear Reducer Motorized Input	Gear Reducer Shaft Input
796	656	1.33	8.6	461	124	**HA61**	**IHA61**
796	350	2.50	4.6	569	124	**HA61**	**IHA61**
973	200	4.38	3.2	686	124	**HA61**	**IHA61**
796	113	7.75	1.5	830	124	**HA61**	**IHA61**
619	82	10.67	0.8	923	124	**HA61**	**IHA61**
3362	170	5.14	9.5	943	117	**HA62**	**IHA62**
3362	141	6.22	7.8	1005	145	**HA62**	**IHA62**
3362	113	7.73	6.3	1080	141	**HA62**	**IHA62**
4070	91	9.64	6.1	1163	170	**HA62**	**IHA62**
3893	75	11.67	4.8	1239	139	**HA62**	**IHA62**
3716	60	14.50	3.7	1332	135	**HA62**	**IHA62**
4424	52	16.91	3.8	1402	179	**HA62**	**IHA62**
4070	43	20.46	2.9	1494	133	**HA62**	**IHA62**
3805	34	25.43	2.2	1606	132	**HA62**	**IHA62**
3982	29	29.89	1.9	1695	156	**HA62**	**IHA62**
4159	24	36.17	1.7	1798	152	**HA62**	**IHA62**
3893	19	44.95	1.3	1798	132	**HA62**	**IHA62**
3274	18	49.78	1.0	1798	133	**HA62**	**IHA62**
3893	14	61.87	0.9	1798	168	**HA62**	**IHA62**
4247	18	49.80	1.3	1798	74	**HA63**	**IHA63**
4247	15	60.25	1.0	1798	92	**HA63**	**IHA63**
4247	12	74.88	0.8	1798	90	**HA63**	**IHA63**
4247	9.9	88.02	0.7	1798	95	**HA63**	**IHA63**
4247	7.8	111.61	0.6	1798	88	**HA63**	**IHA63**
4247	6.3	138.71	0.5	1798	90	**HA63**	**IHA63**
4247	5.4	163.05	0.4	1798	95	**HA63**	**IHA63**
4247	4.4	200.27	0.3	1798	91	**HA63**	**IHA63**
4247	3.7	235.41	0.3	1798	95	**HA63**	**IHA63**
4247	3.1	284.81	0.2	1798	92	**HA63**	**IHA63**
4247	2.5	353.98	0.2	1798	90	**HA63**	**IHA63**

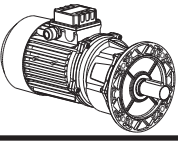

Notes HA

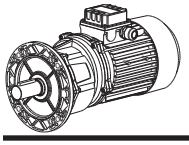

MOTOVARIO™

HA Gearmotor Ratings – Motor Speed 1750 RPM

Input Power HP	Output Speed RPM	Service Factor sf	Output Torque in lbs.	Exact Ratio i	Maximum Torque in lbs.	OHL Output Shaft lbs.	Gearmotor Reducer	Gearmotor Motor	Gear Reducer Reducer	Gear Reducer NEMA C-face
0.16	1208	27.3	8	1.45	221	115	**CHA41**	63A4	**HA41**	56C
	594	13.4	16	2.94	221	146	**CHA41**	63A4	**HA41**	56C
	368	10.0	27	4.75	265	171	**CHA41**	63A4	**HA41**	56C
	325	23.8	30	5.38	708	246	**CHA32**	63A4	**HA32**	56C
	321	8.7	30	5.45	265	179	**CHA41**	63A4	**HA41**	56C
	269	19.6	36	6.52	708	263	**CHA32**	63A4	**HA32**	56C
	222	5.0	44	7.88	221	202	**CHA41**	63A4	**HA41**	56C
	216	14.8	45	8.11	664	283	**CHA32**	63A4	**HA32**	56C
	162	2.9	61	10.83	177	225	**CHA41**	63A4	**HA41**	56C
	160	13.2	60	10.94	796	312	**CHA32**	63A4	**HA32**	56C
	132	9.7	73	13.25	708	333	**CHA32**	63A4	**HA32**	56C
	106	7.8	91	16.49	708	358	**CHA32**	63A4	**HA32**	56C
	86	7.1	112	20.26	796	383	**CHA32**	63A4	**HA32**	56C
	71	5.5	136	24.55	752	409	**CHA32**	63A4	**HA32**	56C
	57	4.2	169	30.55	708	440	**CHA32**	63A4	**HA32**	56C
	49	4.1	196	35.44	796	449	**CHA32**	63A4	**HA32**	56C
	40	3.3	244	44.10	796	449	**CHA32**	63A4	**HA32**	56C
	36	2.6	270	48.75	708	449	**CHA32**	63A4	**HA32**	56C
	34	3.2	278	51.32	885	449	**CHA33**	63A4	**HA33**	56C
	29	2.7	323	59.65	885	449	**CHA33**	63A4	**HA33**	56C
	29	2.5	336	60.67	841	449	**CHA32**	63A4	**HA32**	56C
	29	3.7	336	60.67	1239	966	**CHA42**	63A4	**HA42**	56C
	24	2.3	391	72.27	885	449	**CHA33**	63A4	**HA33**	56C
	24	3.4	391	72.27	1327	966	**CHA43**	63A4	**HA43**	56C
	19	1.8	487	89.94	885	449	**CHA33**	63A4	**HA33**	56C
	19	2.7	487	89.94	1327	966	**CHA43**	63A4	**HA43**	56C
	16	1.5	598	110.51	885	449	**CHA33**	63A4	**HA33**	56C
	16	2.2	598	110.51	1327	966	**CHA43**	63A4	**HA43**	56C
	13	1.2	725	133.88	885	449	**CHA33**	63A4	**HA33**	56C
	13	1.8	725	133.88	1327	966	**CHA43**	63A4	**HA43**	56C
	13	3.5	751	138.71	2654	1348	**CHA53**	63A4	**HA53**	56C
	11	1.0	902	166.61	885	449	**CHA33**	63A4	**HA33**	56C
	11	1.5	902	166.61	1327	966	**CHA43**	63A4	**HA43**	56C
	11	3.0	883	163.05	2654	1348	**CHA53**	63A4	**HA53**	56C
	9.1	1.3	1047	193.30	1327	966	**CHA43**	63A4	**HA43**	56C
	8.7	2.4	1085	200.27	2654	1348	**CHA53**	63A4	**HA53**	56C
	8.7	3.9	1085	200.27	4247	1798	**CHA63**	63A4	**HA63**	56C
	7.4	2.1	1275	235.41	2654	1348	**CHA53**	63A4	**HA53**	56C
	7.4	3.3	1275	235.41	4247	1798	**CHA63**	63A4	**HA63**	56C
	7.3	1.0	1303	240.55	1327	966	**CHA43**	63A4	**HA43**	56C
	6.1	1.7	1542	284.81	2654	1348	**CHA53**	63A4	**HA53**	56C
	6.1	2.8	1542	284.81	4247	1798	**CHA63**	63A4	**HA63**	56C
	4.9	1.4	1917	353.98	2654	1348	**CHA53**	63A4	**HA53**	56C
	4.9	2.2	1917	353.98	4247	1798	**CHA63**	63A4	**HA63**	56C

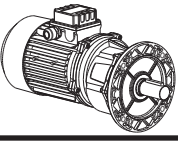

Gearmotor Ratings – Motor Speed 1750 RPM HA

Input Power HP	Output Speed RPM	Service Factor sf	Output Torque in lbs.	Exact Ratio i	Maximum Torque in lbs.	OHL Output Shaft lbs.	Gearmotor Reducer	Gearmotor Motor	Gear Reducer Reducer	Gear Reducer NEMA C-face
0.25	1208	17.5	13	1.45	221	115	**CHA41**	63B4	**HA41**	56C
	594	8.6	26	2.94	221	146	**CHA41**	63B4	**HA41**	56C
	368	6.4	41	4.75	265	171	**CHA41**	63B4	**HA41**	56C
	325	15.2	46	5.38	708	246	**CHA32**	63B4	**HA32**	56C
	321	5.6	48	5.45	265	179	**CHA41**	63B4	**HA41**	56C
	269	12.6	56	6.52	708	263	**CHA32**	63B4	**HA32**	56C
	222	3.2	69	7.88	221	202	**CHA41**	63B4	**HA41**	56C
	216	9.5	70	8.11	664	283	**CHA32**	63B4	**HA32**	56C
	162	1.9	95	10.83	177	225	**CHA41**	63B4	**HA41**	56C
	162	2.3	95	10.83	221	620	**CHA51**	63B4	**HA51**	56C
	160	8.4	95	10.94	796	312	**CHA32**	63B4	**HA32**	56C
	132	6.2	114	13.25	708	333	**CHA32**	63B4	**HA32**	56C
	106	5.0	142	16.49	708	358	**CHA32**	63B4	**HA32**	56C
	86	4.5	175	20.26	796	383	**CHA32**	63B4	**HA32**	56C
	71	3.5	212	24.55	752	409	**CHA32**	63B4	**HA32**	56C
	57	2.7	264	30.55	708	440	**CHA32**	63B4	**HA32**	56C
	49	2.6	306	35.44	796	449	**CHA32**	63B4	**HA32**	56C
	40	2.1	381	44.10	796	449	**CHA32**	63B4	**HA32**	56C
	40	3.3	381	44.10	1239	966	**CHA42**	63B4	**HA42**	56C
	36	1.7	421	48.75	708	449	**CHA32**	63B4	**HA32**	56C
	36	2.7	421	48.75	1150	966	**CHA42**	63B4	**HA42**	56C
	34	2.0	434	51.32	885	449	**CHA33**	63B4	**HA33**	56C
	34	3.1	434	51.32	1327	966	**CHA43**	63B4	**HA43**	56C
	29	1.8	505	59.65	885	449	**CHA33**	63B4	**HA33**	56C
	29	2.6	505	59.65	1327	966	**CHA43**	63B4	**HA43**	56C
	29	1.6	524	60.67	841	449	**CHA32**	63B4	**HA32**	56C
	29	2.4	524	60.67	1239	966	**CHA42**	63B4	**HA42**	56C
	24	1.4	612	72.27	885	449	**CHA33**	63B4	**HA33**	56C
	24	2.2	612	72.27	1327	966	**CHA43**	63B4	**HA43**	56C
	20	3.6	745	88.02	2654	1348	**CHA53**	63B4	**HA53**	56C
	19	1.2	761	89.94	885	449	**CHA33**	63B4	**HA33**	56C
	19	1.7	761	89.94	1327	966	**CHA43**	63B4	**HA43**	56C
	16	1.4	935	110.51	1327	966	**CHA43**	63B4	**HA43**	56C
	16	2.8	944	111.61	2654	1348	**CHA53**	63B4	**HA53**	56C
	13	1.2	1133	133.88	1327	966	**CHA43**	63B4	**HA43**	56C
	13	2.3	1174	138.71	2654	1348	**CHA53**	63B4	**HA53**	56C
	13	3.6	1174	138.71	4247	1798	**CHA63**	63B4	**HA63**	56C
	11	1.9	1380	163.05	2654	1348	**CHA53**	63B4	**HA53**	56C
	11	3.1	1380	163.05	4247	1798	**CHA63**	63B4	**HA63**	56C
	8.7	1.6	1695	200.27	2654	1348	**CHA53**	63B4	**HA53**	56C
	8.7	2.5	1695	200.27	4247	1798	**CHA63**	63B4	**HA63**	56C
	7.4	1.3	1992	235.41	2654	1348	**CHA53**	63B4	**HA53**	56C
	7.4	2.1	1992	235.41	4247	1798	**CHA63**	63B4	**HA63**	56C
	6.1	1.1	2410	284.81	2654	1348	**CHA53**	63B4	**HA53**	56C
	6.1	1.8	2410	284.81	4247	1798	**CHA63**	63B4	**HA63**	56C
	4.9	1.4	2995	353.98	4247	1798	**CHA63**	63B4	**HA63**	56C

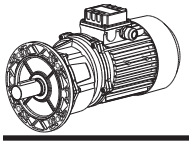

MOTOVARIO™

HA Gearmotor Ratings – Motor Speed 1750 RPM

Input Power HP	Output Speed RPM	Service Factor sf	Output Torque in lbs.	Exact Ratio i	Maximum Torque in lbs.	OHL Output Shaft lbs.	Gearmotor Reducer	Gearmotor Motor	Gear Reducer Reducer	Gear Reducer NEMA C-face
0.33	1208	13.3	17	1.45	221	115	**CHA41**	71A4	**HA41**	56C
	594	6.5	34	2.94	221	146	**CHA41**	71A4	**HA41**	56C
	368	4.8	55	4.75	265	171	**CHA41**	71A4	**HA41**	56C
	325	11.5	61	5.38	708	246	**CHA32**	71A4	**HA32**	56C
	321	4.2	63	5.45	265	179	**CHA41**	71A4	**HA41**	56C
	269	9.5	74	6.52	708	263	**CHA32**	71A4	**HA32**	56C
	222	2.4	91	7.88	221	202	**CHA41**	71A4	**HA41**	56C
	222	3.9	91	7.88	354	557	**CHA51**	71A4	**HA51**	56C
	216	7.2	93	8.11	664	283	**CHA32**	71A4	**HA32**	56C
	162	1.4	125	10.83	177	225	**CHA41**	71A4	**HA41**	56C
	162	1.8	125	10.83	221	620	**CHA51**	71A4	**HA51**	56C
	160	6.4	125	10.94	796	312	**CHA32**	71A4	**HA32**	56C
	132	4.7	151	13.25	708	333	**CHA32**	71A4	**HA32**	56C
	106	3.8	188	16.49	708	358	**CHA32**	71A4	**HA32**	56C
	86	3.4	231	20.26	796	383	**CHA32**	71A4	**HA32**	56C
	71	2.7	280	24.55	752	409	**CHA32**	71A4	**HA32**	56C
	57	2.0	348	30.55	708	440	**CHA32**	71A4	**HA32**	56C
	57	3.6	348	30.55	1239	925	**CHA42**	71A4	**HA42**	56C
	49	2.0	404	35.44	796	449	**CHA32**	71A4	**HA32**	56C
	49	3.3	404	35.44	1327	966	**CHA42**	71A4	**HA42**	56C
	40	1.6	503	44.10	796	449	**CHA32**	71A4	**HA32**	56C
	40	2.5	503	44.10	1239	966	**CHA42**	71A4	**HA42**	56C
	36	1.3	556	48.75	708	449	**CHA32**	71A4	**HA32**	56C
	36	2.1	556	48.75	1150	966	**CHA42**	71A4	**HA42**	56C
	34	1.5	573	51.32	885	449	**CHA33**	71A4	**HA33**	56C
	34	2.3	573	51.32	1327	966	**CHA43**	71A4	**HA43**	56C
	29	1.3	666	59.65	885	449	**CHA33**	71A4	**HA33**	56C
	29	2.0	666	59.65	1327	966	**CHA43**	71A4	**HA43**	56C
	29	3.9	673	60.25	2654	1348	**CHA53**	71A4	**HA53**	56C
	29	1.2	692	60.67	841	449	**CHA32**	71A4	**HA32**	56C
	29	1.8	692	60.67	1239	966	**CHA42**	71A4	**HA42**	56C
	28	3.6	706	61.87	2566	1348	-	-	**HA52**	56C
	24	1.1	807	72.27	885	449	**CHA33**	71A4	**HA33**	56C
	24	1.6	807	72.27	1327	966	**CHA43**	71A4	**HA43**	56C
	23	3.2	836	74.88	2654	1348	**CHA53**	71A4	**HA53**	56C
	20	2.7	983	88.02	2654	1348	**CHA53**	71A4	**HA53**	56C
	19	1.3	1005	89.94	1327	966	**CHA43**	71A4	**HA43**	56C
	16	1.1	1234	110.51	1327	966	**CHA43**	71A4	**HA43**	56C
	16	2.1	1247	111.61	2654	1348	**CHA53**	71A4	**HA53**	56C
	16	3.4	1247	111.61	4247	1798	**CHA63**	71A4	**HA63**	56C
	13	1.7	1549	138.71	2654	1348	**CHA53**	71A4	**HA53**	56C
	13	2.7	1549	138.71	4247	1798	**CHA63**	71A4	**HA63**	56C
	11	1.5	1821	163.05	2654	1348	**CHA53**	71A4	**HA53**	56C
	11	2.3	1821	163.05	4247	1798	**CHA63**	71A4	**HA63**	56C
	8.7	1.2	2237	200.27	2654	1348	**CHA53**	71A4	**HA53**	56C

MOTOVARIO™

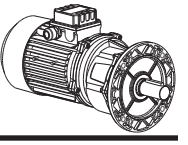

Gearmotor Ratings – Motor Speed 1750 RPM HA

Input Power HP	Output Speed RPM	Service Factor sf	Output Torque in lbs.	Exact Ratio i	Maximum Torque in lbs.	OHL Output Shaft lbs.	Gearmotor Reducer	Gearmotor Motor	Gear Reducer Reducer	Gear Reducer NEMA C-face
0.33	8.7	1.9	2237	200.27	4247	1798	**CHA63**	71A4	**HA63**	56C
	7.4	1.0	2629	235.41	2654	1348	**CHA53**	71A4	**HA53**	56C
	7.4	1.6	2629	235.41	4247	1798	**CHA63**	71A4	**HA63**	56C
	6.1	1.3	3181	284.81	4247	1798	**CHA63**	71A4	**HA63**	56C
	4.9	1.1	3954	353.98	4247	1798	**CHA63**	71A4	**HA63**	56C
0.5	1208	8.7	25	1.45	221	115	**CHA41**	71B4	**HA41**	56C
	594	4.3	51	2.94	221	146	**CHA41**	71B4	**HA41**	56C
	368	3.2	83	4.75	265	171	**CHA41**	71B4	**HA41**	56C
	325	7.6	93	5.38	708	246	**CHA32**	71B4	**HA32**	56C
	321	2.8	95	5.45	265	179	**CHA41**	71B4	**HA41**	56C
	269	6.3	113	6.52	708	263	**CHA32**	71B4	**HA32**	56C
	222	1.6	138	7.88	221	202	**CHA41**	71B4	**HA41**	56C
	222	2.6	138	7.88	354	557	**CHA51**	71B4	**HA51**	56C
	216	4.7	140	8.11	664	283	**CHA32**	71B4	**HA32**	56C
	164	3.3	186	10.67	619	923	-	-	**HA61**	56C
	162	1.2	189	10.83	221	620	**CHA51**	71B4	**HA51**	56C
	160	4.2	189	10.94	796	312	**CHA32**	71B4	**HA32**	56C
	132	3.1	229	13.25	708	333	**CHA32**	71B4	**HA32**	56C
	106	2.5	285	16.49	708	358	**CHA32**	71B4	**HA32**	56C
	86	2.3	350	20.26	796	383	**CHA32**	71B4	**HA32**	56C
	86	3.8	350	20.26	1327	3591	**CHA42**	71B4	**HA42**	56C
	71	1.8	424	24.55	752	409	**CHA32**	71B4	**HA32**	56C
	71	3.2	424	24.55	1371	860	**CHA42**	71B4	**HA42**	56C
	57	1.3	528	30.55	708	440	**CHA32**	71B4	**HA32**	56C
	57	2.3	528	30.55	1239	925	**CHA42**	71B4	**HA42**	56C
	49	1.3	612	35.44	796	449	**CHA32**	71B4	**HA32**	56C
	49	2.2	612	35.44	1327	966	**CHA42**	71B4	**HA42**	56C
	40	1.0	762	44.10	796	449	**CHA32**	71B4	**HA32**	56C
	40	1.6	762	44.10	1239	966	**CHA42**	71B4	**HA42**	56C
	39	3.2	777	44.95	2477	1316	-	-	**HA52**	56C
	36	1.4	843	48.75	1150	966	**CHA42**	71B4	**HA42**	56C
	35	3.1	860	49.78	2654	1348	-	-	**HA52**	56C
	35	3.8	860	49.78	3274	1798	-	-	**HA62**	56C
	35	3.1	843	49.80	2654	1348	**CHA53**	71B4	**HA53**	56C
	34	1.0	869	51.32	885	449	**CHA33**	71B4	**HA33**	56C
	34	1.5	869	51.32	1327	966	**CHA43**	71B4	**HA43**	56C
	29	1.3	1010	59.65	1327	966	**CHA43**	71B4	**HA43**	56C
	29	2.6	1020	60.25	2654	1348	**CHA53**	71B4	**HA53**	56C
	29	1.2	1049	60.67	1239	966	**CHA42**	71B4	**HA42**	56C
	28	2.4	1069	61.87	2566	1348	-	-	**HA52**	56C
	28	3.6	1069	61.87	3893	1798	-	-	**HA62**	56C
	24	1.1	1223	72.27	1327	966	**CHA43**	71B4	**HA43**	56C
	23	2.1	1267	74.88	2654	1348	**CHA53**	71B4	**HA53**	56C
	23	3.4	1267	74.88	4247	1798	**CHA63**	71B4	**HA63**	56C
	20	1.8	1490	88.02	2654	1348	**CHA53**	71B4	**HA53**	56C

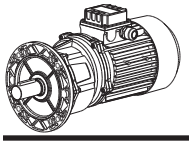

MOTOVARIO™

HA Gearmotor Ratings – Motor Speed 1750 RPM

Input Power HP	Output Speed RPM	Service Factor sf	Output Torque in lbs.	Exact Ratio i	Maximum Torque in lbs.	OHL Output Shaft lbs.	Gearmotor Reducer	Gearmotor Motor	Gear Reducer Reducer	Gear Reducer NEMA C-face
0.5	20	2.9	1490	88.02	4247	1798	**CHA63**	71B4	**HA63**	56C
	16	1.4	1889	111.61	2654	1348	**CHA53**	71B4	**HA53**	56C
	16	2.2	1889	111.61	4247	1798	**CHA63**	71B4	**HA63**	56C
	13	1.1	2347	138.71	2654	1348	**CHA53**	71B4	**HA53**	56C
	13	1.8	2347	138.71	4247	1798	**CHA63**	71B4	**HA63**	56C
	11	1.0	2759	163.05	2654	1348	**CHA53**	71B4	**HA53**	56C
	11	1.5	2759	163.05	4247	1798	**CHA63**	71B4	**HA63**	56C
	8.7	1.3	3389	200.27	4247	1798	**CHA63**	71B4	**HA63**	56C
	7.4	1.1	3984	235.41	4247	1798	**CHA63**	71B4	**HA63**	56C
0.75	1208	5.8	38	1.45	221	115	**CHA41**	80A4	**HA41**	56C
	594	2.9	77	2.94	221	146	**CHA41**	80A4	**HA41**	56C
	368	3.6	124	4.75	442	471	**CHA51**	80A4	**HA51**	56C
	368	2.1	124	4.75	265	171	**CHA41**	80A4	**HA41**	56C
	325	5.1	139	5.38	708	246	**CHA32**	80A4	**HA32**	56C
	321	3.1	143	5.45	442	493	**CHA51**	80A4	**HA51**	56C
	321	1.9	143	5.45	265	179	**CHA41**	80A4	**HA41**	56C
	269	4.2	169	6.52	708	263	**CHA32**	80A4	**HA32**	56C
	226	3.9	203	7.75	796	830	**CHA61**	80A4	**HA61**	56C
	222	1.1	206	7.88	221	202	-	-	**HA41**	56C
	222	1.7	206	7.88	354	557	-	-	**HA51**	56C
	216	3.2	210	8.11	664	283	**CHA32**	80A4	**HA32**	56C
	164	2.2	279	10.67	619	923	**CHA61**	80A4	**HA61**	56C
	160	2.8	284	10.94	796	312	**CHA32**	80A4	**HA32**	56C
	132	2.1	343	13.25	708	333	**CHA32**	80A4	**HA32**	56C
	132	3.6	343	13.25	1239	701	**CHA42**	80A4	**HA42**	56C
	106	1.7	427	16.49	708	358	**CHA32**	80A4	**HA32**	56C
	106	2.9	427	16.49	1239	753	**CHA42**	80A4	**HA42**	56C
	86	1.5	525	20.26	796	383	**CHA32**	80A4	**HA32**	56C
	86	2.5	525	20.26	1327	3591	**CHA42**	80A4	**HA42**	56C
	71	1.2	636	24.55	752	409	**CHA32**	80A4	**HA32**	56C
	71	2.2	636	24.55	1371	860	**CHA42**	80A4	**HA42**	56C
	69	3.8	659	25.43	2477	1088	**CHA52**	80A4	**HA52**	56C
	59	3.4	775	29.89	2654	1148	**CHA52**	80A4	**HA52**	56C
	57	1.6	792	30.55	1239	925	**CHA42**	80A4	**HA42**	56C
	49	1.4	919	35.44	1327	966	-	-	**HA42**	56C
	48	2.8	938	36.17	2654	1224	**CHA52**	80A4	**HA52**	56C
	40	1.1	1143	44.10	1239	966	-	-	**HA42**	56C
	39	2.1	1165	44.95	2477	1316	**CHA52**	80A4	**HA52**	56C
	39	3.3	1165	44.95	3893	1798	**CHA62**	80A4	**HA62**	56C
	35	2.1	1290	49.78	2654	1348	**CHA52**	80A4	**HA52**	56C
	35	2.5	1290	49.78	3274	1798	**CHA62**	80A4	**HA62**	56C
	35	2.1	1264	49.80	2654	1348	**CHA53**	80A4	**HA53**	56C
	35	3.4	1264	49.80	4247	1798	**CHA63**	80A4	**HA63**	56C
	34	1.0	1303	51.32	1327	966	**CHA43**	80A4	**HA43**	56C

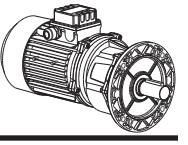

Gearmotor Ratings – Motor Speed 1750 RPM HA

Input Power HP	Output Speed RPM	Service Factor sf	Output Torque in lbs.	Exact Ratio i	Maximum Torque in lbs.	OHL Output Shaft lbs.	Gearmotor Reducer	Gearmotor Motor	Gear Reducer Reducer	Gear Reducer NEMA C-face
0.75	29	1.7	1529	60.25	2654	1348	**CHA53**	80A4	**HA53**	56C
	29	2.8	1529	60.25	4247	1798	**CHA63**	80A4	**HA63**	56C
	28	1.6	1604	61.87	2566	1348	**CHA52**	80A4	**HA52**	56C
	28	2.4	1604	61.87	3893	1798	**CHA62**	80A4	**HA62**	56C
	23	1.4	1901	74.88	2654	1348	**CHA53**	80A4	**HA53**	56C
	23	2.2	1901	74.88	4247	1798	**CHA63**	80A4	**HA63**	56C
	20	1.2	2234	88.02	2654	1348	**CHA53**	80A4	**HA53**	56C
	20	1.9	2234	88.02	4247	1798	**CHA63**	80A4	**HA63**	56C
	16	1.5	2833	111.61	4247	1798	**CHA63**	80A4	**HA63**	56C
	13	1.2	3521	138.71	4247	1798	**CHA63**	80A4	**HA63**	56C
	11	1.0	4139	163.05	4247	1798	**CHA63**	80A4	**HA63**	56C
1.0	1208	4.4	51	1.45	221	115	**CHA41**	80B4	**HA41**	56C/143/145TC
	594	3.4	103	2.94	354	401	**CHA51**	80B4	**HA51**	56C/143/145TC
	594	2.2	103	2.94	221	146	**CHA41**	80B4	**HA41**	56C/143/145TC
	368	1.6	166	4.75	265	171	**CHA41**	80B4	**HA41**	56C/143/145TC
	368	2.7	166	4.75	442	471	**CHA51**	80B4	**HA51**	56C/143/145TC
	325	3.8	186	5.38	708	246	**CHA32**	80B4	**HA32**	56C/143/145TC
	321	1.4	191	5.45	265	179	**CHA41**	80B4	**HA41**	56C/143/145TC
	321	2.3	191	5.45	442	493	**CHA51**	80B4	**HA51**	56C/143/145TC
	269	3.1	225	6.52	708	263	**CHA32**	80B4	**HA32**	56C/143/145TC
	226	2.9	271	7.75	796	830	**CHA61**	80B4	**HA61**	56C/143/145TC
	222	1.3	275	7.88	354	557	-	-	**HA51**	56C
	216	2.4	280	8.11	664	283	**CHA32**	80B4	**HA32**	56C/143/145TC
	164	1.7	373	10.67	619	923	**CHA61**	80B4	**HA61**	56C/143/145TC
	160	2.1	378	10.94	796	312	**CHA32**	80B4	**HA32**	56C/143/145TC
	160	3.5	378	10.94	1327	657	**CHA42**	80B4	**HA42**	56C/143/145TC
	132	1.5	458	13.25	708	333	**CHA32**	80B4	**HA32**	56C/143/145TC
	132	2.7	458	13.25	1239	701	**CHA42**	80B4	**HA42**	56C/143/145TC
	106	1.2	570	16.49	708	358	**CHA32**	80B4	**HA32**	56C/143/145TC
	106	2.2	570	16.49	1239	753	**CHA42**	80B4	**HA42**	56C/143/145TC
	86	1.1	700	20.26	796	383	**CHA32**	80B4	**HA32**	56C/143/145TC
	86	1.9	700	20.26	1327	3591	**CHA42**	80B4	**HA42**	56C/143/145TC
	86	3.6	707	20.46	2566	1012	**CHA52**	80B4	**HA52**	56C/143/145TC
	71	1.6	848	24.55	1371	860	**CHA42**	80B4	**HA42**	56C/143/145TC
	69	2.8	879	25.43	2477	1088	**CHA52**	80B4	**HA52**	56C/143/145TC
	59	2.6	1033	29.89	2654	1148	**CHA52**	80B4	**HA52**	56C/143/145TC
	59	3.9	1033	29.89	3982	1695	**CHA62**	80B4	**HA62**	56C/143/145TC
	57	1.2	1056	30.55	1239	925	**CHA42**	80B4	**HA42**	56C/143/145TC
	49	1.1	1225	35.44	1327	966	-	-	**HA42**	56C
	48	2.1	1250	36.17	2654	1224	**CHA52**	80B4	**HA52**	56C/143/145TC
	48	3.3	1250	36.17	4159	1798	**CHA62**	80B4	**HA62**	56C/143/145TC
	39	1.6	1554	44.95	2477	1316	**CHA52**	80B4	**HA52**	56C/143/145TC
	39	2.5	1554	44.95	3893	1798	**CHA62**	80B4	**HA62**	56C/143/145TC
	35	1.5	1721	49.78	2654	1348	**CHA52**	80B4	**HA52**	56C/143/145TC

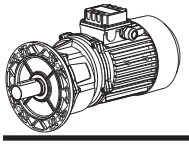

MOTOVARIO™

HA Gearmotor Ratings – Motor Speed 1750 RPM

Input Power HP	Output Speed RPM	Service Factor sf	Output Torque in lbs.	Exact Ratio i	Maximum Torque in lbs.	OHL Output Shaft lbs.	Gearmotor Reducer	Gearmotor Motor	Gear Reducer Reducer	Gear Reducer NEMA C-face
1.0	35	1.9	1721	49.78	3274	1798	**CHA62**	80B4	**HA62**	56C/143/145TC
	35	1.6	1685	49.80	2654	1348	**CHA53**	80B4	**HA53**	56C/143/145TC
	35	2.5	1685	49.80	4247	1798	**CHA63**	80B4	**HA63**	56C/143/145TC
	29	1.3	2039	60.25	2654	1348	**CHA53**	80B4	**HA53**	56C/143/145TC
	29	2.1	2039	60.25	4247	1798	**CHA63**	80B4	**HA63**	56C/143/145TC
	28	1.2	2138	61.87	2566	1348	**CHA52**	80B4	**HA52**	56C/143/145TC
	28	1.8	2138	61.87	3893	1798	**CHA62**	80B4	**HA62**	56C/143/145TC
	23	1.0	2534	74.88	2654	1348	**CHA53**	80B4	**HA53**	56C/143/145TC
	23	1.7	2534	74.88	4247	1798	**CHA63**	80B4	**HA63**	56C/143/145TC
	20	1.4	2979	88.02	4247	1798	**CHA63**	80B4	**HA63**	56C/143/145TC
	16	1.1	3777	111.61	4247	1798	**CHA63**	80B4	**HA63**	56C/143/145TC
1.5	1208	2.9	76	1.45	221	115	-	-	**HA41**	56C/143/145TC
	594	1.4	154	2.94	221	146	-	-	**HA41**	56C/143/145TC
	594	2.3	154	2.94	354	401	**CHA51**	90S4	**HA51**	56C/143/145TC
	368	1.1	249	4.75	265	171	-	-	**HA41**	56C/143/145TC
	368	1.8	249	4.75	442	471	**CHA51**	90S4	**HA51**	56C/143/145TC
	325	2.5	279	5.38	708	246	-	-	**HA32**	56C/143/145TC
	321	1.5	286	5.45	442	493	**CHA51**	90S4	**HA51**	56C/143/145TC
	269	2.1	338	6.52	708	263	-	-	**HA32**	56C/143/145TC
	269	3.7	338	6.52	1239	553	**CHA42**	90S4	**HA42**	56C/143/145TC
	226	2.0	406	7.75	796	830	**CHA61**	90S4	**HA61**	56C/143/145TC
	216	1.6	421	8.11	664	283	-	-	**HA32**	56C/143/145TC
	216	2.7	421	8.11	1150	595	**CHA42**	90S4	**HA42**	56C/143/145TC
	164	1.1	559	10.67	619	923	**CHA61**	90S4	**HA61**	56C/143/145TC
	160	1.4	567	10.94	796	312	-	-	**HA32**	56C/143/145TC
	160	2.3	567	10.94	1327	657	**CHA42**	90S4	**HA42**	56C/143/145TC
	132	1.0	687	13.25	708	333	-	-	**HA32**	56C/143/145TC
	132	1.8	687	13.25	1239	701	**CHA42**	90S4	**HA42**	56C/143/145TC
	121	3.3	752	14.50	2477	902	**CHA52**	90S4	**HA52**	56C/143/145TC
	106	1.4	855	16.49	1239	753	**CHA42**	90S4	**HA42**	56C/143/145TC
	103	3.0	877	16.91	2654	950	**CHA52**	90S4	**HA52**	56C/143/145TC
	86	1.3	1050	20.26	1327	3591	**CHA42**	90S4	**HA42**	56C/143/145TC
	86	2.4	1061	20.46	2566	1012	**CHA52**	90S4	**HA52**	56C/143/145TC
	86	3.8	1061	20.46	4070	1494	**CHA62**	90S4	**HA62**	56C/143/145TC
	71	1.1	1273	24.55	1371	860	**CHA42**	90S4	**HA42**	56C/143/145TC
	69	1.9	1319	25.43	2477	1088	**CHA52**	90S4	**HA52**	56C/143/145TC
	69	2.9	1319	25.43	3805	1606	**CHA62**	90S4	**HA62**	56C/143/145TC
	59	1.7	1550	29.89	2654	1148	**CHA52**	90S4	**HA52**	56C/143/145TC
	59	2.6	1550	29.89	3982	1695	**CHA62**	90S4	**HA62**	56C/143/145TC
	48	1.4	1875	36.17	2654	1224	**CHA52**	90S4	**HA52**	56C/143/145TC
	48	2.2	1875	36.17	4159	1798	**CHA62**	90S4	**HA62**	56C/143/145TC
	39	1.1	2331	44.95	2477	1316	**CHA52**	90S4	**HA52**	56C/143/145TC
	39	1.7	2331	44.95	3893	1798	**CHA62**	90S4	**HA62**	56C/143/145TC
	35	1.0	2581	49.78	2654	1348	**CHA52**	90S4	**HA52**	56C/143/145TC

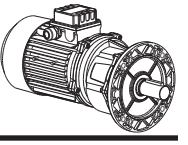

Gearmotor Ratings – Motor Speed 1750 RPM HA

Input Power HP	Output Speed RPM	Service Factor sf	Output Torque in lbs.	Exact Ratio i	Maximum Torque in lbs.	OHL Output Shaft lbs.	Gearmotor Reducer	Gearmotor Motor	Gear Reducer Reducer	Gear Reducer NEMA C-face
1.5	35	1.3	2581	49.78	3274	1798	**CHA62**	90S4	**HA62**	56C/143/145TC
	35	1.0	2528	49.80	2654	1348	**CHA53**	90S4	**HA53**	56C/143/145TC
	35	1.7	2528	49.80	4247	1798	**CHA63**	90S4	**HA63**	56C/143/145TC
	29	1.4	3059	60.25	4247	1798	**CHA63**	90S4	**HA63**	56C/143/145TC
	28	1.2	3208	61.87	3893	1798	**CHA62**	90S4	**HA62**	56C/143/145TC
	23	1.1	3802	74.88	4247	1798	**CHA63**	90S4	**HA63**	56C/143/145TC
	20	1.0	4469	88.02	4247	1798	**CHA63**	90S4	**HA63**	56C/143/145TC
2.0	1208	2.2	101	1.45	221	115	-	-	**HA41**	143/145TC
	1208	3.5	101	1.45	354	317	**CHA51**	90L4	**HA51**	143/145TC
	594	1.1	206	2.94	221	146	-	-	**HA41**	143/145TC
	594	1.7	206	2.94	354	401	**CHA51**	90L4	**HA51**	143/145TC
	399	3.2	306	4.38	973	686	**CHA61**	90L4	**HA61**	143/145TC
	368	1.3	332	4.75	442	471	**CHA51**	90L4	**HA51**	143/145TC
	325	1.9	372	5.38	708	246	-	-	**HA32**	143/145TC
	325	3.3	372	5.38	1239	519	**CHA42**	90L4	**HA42**	143/145TC
	321	1.2	381	5.45	442	493	**CHA51**	90L4	**HA51**	143/145TC
	269	1.6	451	6.52	708	263	-	-	**HA32**	143/145TC
	269	2.7	451	6.52	1239	553	**CHA42**	90L4	**HA42**	143/145TC
	226	4.0	535	7.73	2124	732	**CHA52**	90L4	**HA52**	143/145TC
	226	1.5	541	7.75	796	830	**CHA61**	90L4	**HA61**	143/145TC
	216	1.2	561	8.11	664	283	-	-	**HA32**	143/145TC
	216	2.1	561	8.11	1150	595	**CHA42**	90L4	**HA42**	143/145TC
	181	4.0	667	9.64	2654	788	**CHA52**	90L4	**HA52**	143/145TC
	160	1.1	756	10.94	796	312	-	-	**HA32**	143/145TC
	160	1.8	756	10.94	1327	657	**CHA42**	90L4	**HA42**	143/145TC
	150	3.1	807	11.67	2477	839	**CHA52**	90L4	**HA52**	143/145TC
	132	1.4	916	13.25	1239	701	**CHA42**	90L4	**HA42**	143/145TC
	121	2.5	1002	14.50	2477	902	**CHA52**	90L4	**HA52**	143/145TC
	121	3.7	1002	14.50	3716	1332	**CHA62**	90L4	**HA62**	143/145TC
	106	1.1	1140	16.49	1239	753	**CHA42**	90L4	**HA42**	143/145TC
	103	2.3	1169	16.91	2654	950	**CHA52**	90L4	**HA52**	143/145TC
	103	3.8	1169	16.91	4424	1402	**CHA62**	90L4	**HA62**	143/145TC
	86	1.8	1415	20.46	2566	1012	**CHA52**	90L4	**HA52**	143/145TC
	86	2.9	1415	20.46	4070	1494	**CHA62**	90L4	**HA62**	143/145TC
	69	1.4	1758	25.43	2477	1088	**CHA52**	90L4	**HA52**	143/145TC
	69	2.2	1758	25.43	3805	1606	**CHA62**	90L4	**HA62**	143/145TC
	59	1.3	2067	29.89	2654	1148	**CHA52**	90L4	**HA52**	143/145TC
	59	1.9	2067	29.89	3982	1695	**CHA62**	90L4	**HA62**	143/145TC
	48	1.1	2500	36.17	2654	1224	**CHA52**	90L4	**HA52**	143/145TC
	48	1.7	2500	36.17	4159	1798	**CHA62**	90L4	**HA62**	143/145TC
	39	1.3	3107	44.95	3893	1798	**CHA62**	90L4	**HA62**	143/145TC
	35	1.0	3441	49.78	3274	1798	**CHA62**	90L4	**HA62**	143/145TC
	35	1.3	3371	49.80	4247	1798	**CHA63**	90L4	**HA63**	143/145TC
	29	1.0	4078	60.25	4247	1798	**CHA63**	90L4	**HA63**	143/145TC

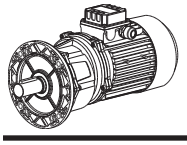

MOTOVARIO™

HA Gearmotor Ratings – Motor Speed 1750 RPM

Input Power HP	Output Speed RPM	Service Factor sf	Output Torque in lbs.	Exact Ratio i	Maximum Torque in lbs.	OHL Output Shaft lbs.	Gearmotor Reducer	Gearmotor Motor	Gear Reducer Reducer	Gear Reducer NEMA C-face
3.0	1313	5.7	140	1.33	796	461	**CHA61**	100LA4	**HA61**	182/184TC
	700	3.0	262	2.50	796	569	**CHA61**	100LA4	**HA61**	182/184TC
	399	2.1	459	4.38	973	686	**CHA61**	100LA4	**HA61**	182/184TC
	340	4.0	533	5.14	2124	639	**CHA52**	100LA4	**HA52**	182/184TC
	281	3.3	645	6.22	2124	681	**CHA52**	100LA4	**HA52**	182/184TC
	226	2.6	802	7.73	2124	732	**CHA52**	100LA4	**HA52**	182/184TC
	181	2.7	1000	9.64	2654	788	**CHA52**	100LA4	**HA52**	182/184TC
	150	2.0	1210	11.67	2477	839	**CHA52**	100LA4	**HA52**	182/184TC
	150	3.2	1210	11.67	3893	1239	**CHA62**	100LA4	**HA62**	182/184TC
	121	1.6	1504	14.50	2477	902	**CHA52**	100LA4	**HA52**	182/184TC
	121	2.5	1504	14.50	3716	1332	**CHA62**	100LA4	**HA62**	182/184TC
	103	1.5	1754	16.91	2654	950	**CHA52**	100LA4	**HA52**	182/184TC
	103	2.5	1754	16.91	4424	1402	**CHA62**	100LA4	**HA62**	182/184TC
	86	1.2	2122	20.46	2566	1012	**CHA52**	100LA4	**HA52**	182/184TC
	86	1.9	2122	20.46	4070	1494	**CHA62**	100LA4	**HA62**	182/184TC
	69	1.4	2637	25.43	3805	1606	**CHA62**	100LA4	**HA62**	182/184TC
5.0	1313	3.4	233	1.33	796	461	**CHA61**	112M4	**HA61**	182/184TC
	700	1.8	437	2.50	796	569	**CHA61**	112M4	**HA61**	182/184TC
	399	1.3	766	4.38	973	686	**CHA61**	112M4	**HA61**	182/184TC
	340	2.4	889	5.14	2124	639	**CHA52**	112M4	**HA52**	182/184TC
	340	3.8	889	5.14	3362	943	**CHA62**	112M4	**HA62**	182/184TC
	281	2.0	1075	6.22	2124	681	**CHA52**	112M4	**HA52**	182/184TC
	281	3.1	1075	6.22	3362	1005	**CHA62**	112M4	**HA62**	182/184TC
	226	1.6	1337	7.73	2124	732	**CHA52**	112M4	**HA52**	182/184TC
	226	2.5	1337	7.73	3362	1080	**CHA62**	112M4	**HA62**	182/184TC
	181	1.6	1667	9.64	2654	788	**CHA52**	112M4	**HA52**	182/184TC
	181	2.4	1667	9.64	4070	1163	**CHA62**	112M4	**HA62**	182/184TC
	150	1.2	2016	11.67	2477	839	**CHA52**	112M4	**HA52**	182/184TC
	150	1.9	2016	11.67	3893	1239	**CHA62**	112M4	**HA62**	182/184TC
	121	1.0	2506	14.50	2477	902	**CHA52**	112M4	**HA52**	182/184TC
	121	1.5	2506	14.50	3716	1332	**CHA62**	112M4	**HA62**	182/184TC
	103	1.5	2923	16.91	4424	1402	**CHA62**	112M4	**HA62**	182/184TC
	86	1.2	3536	20.46	4070	1494	**CHA62**	112M4	**HA62**	182/184TC

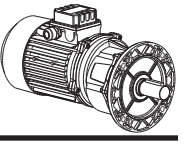

Notes HA

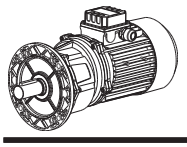

MOTOVARIO™

A32 HA Dimensions

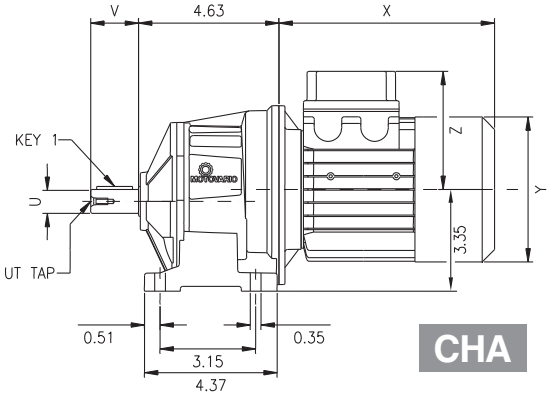

CHA

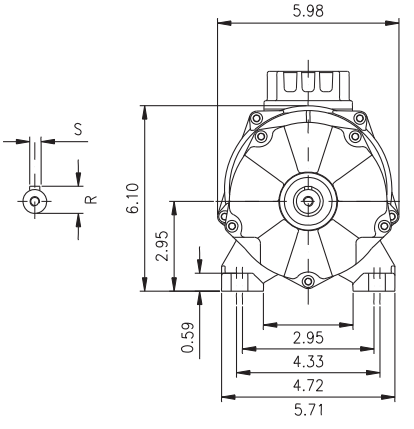

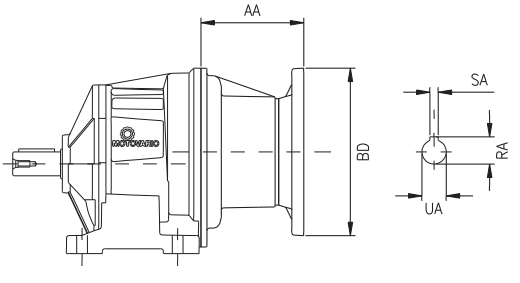

HA

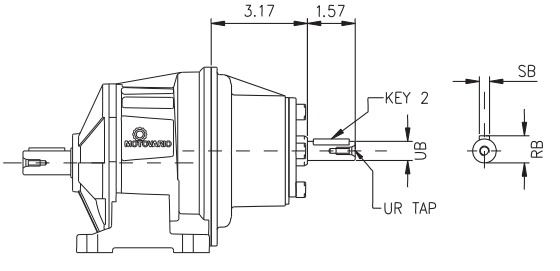

IHA

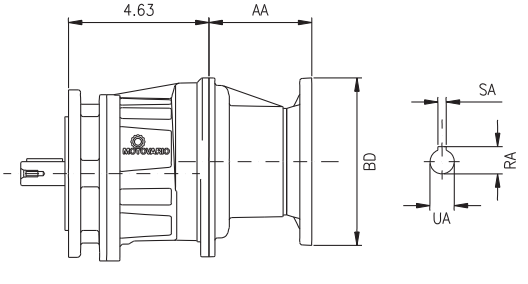

HA...F

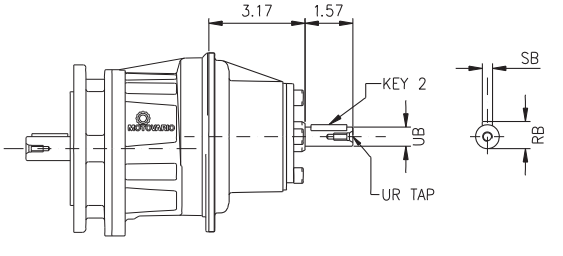

IHA...F

U	R	S	V	UT TAP	KEY 1
0.750 $^{+0.0000}_{-0.0005}$	0.83	0.1875	1.57	1/4-20	3/16x3/16x1-1/8
20mm $^{+0.009mm}_{-0.004mm}$	22.5mm	6mm	40mm	M6	6 x 6 x 30mm
16mm $^{+0.008mm}_{-0.003mm}$	18mm	5mm		M640mm	5 x 5 x 30mm
14mm $^{+0.008mm}_{-0.003mm}$	16mm	5mm	30mm	M6	5 x 5 x 20mm

UB	RB	SB	UR TAP	KEY 2
0.750 $^{+0.0000}_{-0.0005}$	0.83	0.1875	1/4-20	3/16x3/16x1-1/8
16mm $^{+0.008mm}_{-0.003mm}$	18mm	5mm	M6	5 x 5 x 30

Dimensions for motor connections available on page 60.

Diameter of motor or motor flange may protrude below mounting feet of reducer. Please check motor connection for conflicts.

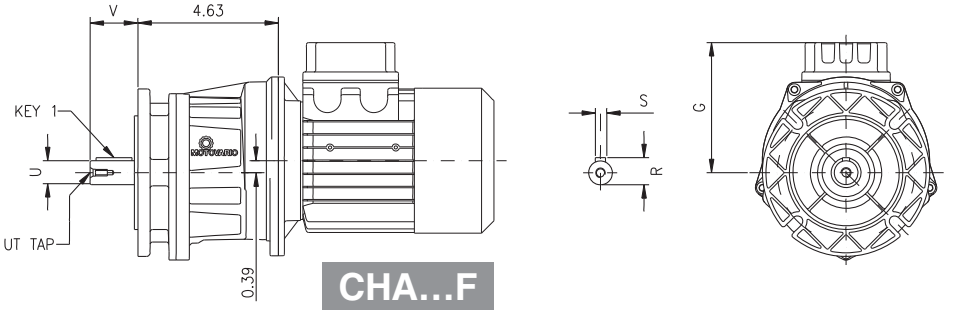

CHA...F

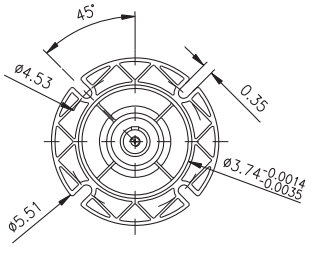

FB

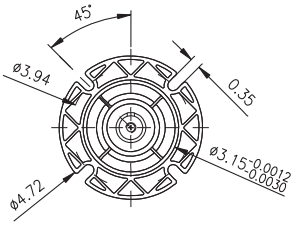

FC

		UA	RA	SA	AA	BD	G
NEMA	**56C**	0.625 $^{+0.0013}_{+0.0006}$	0.71	0.1875	3.78	6.50	-
	140TC	0.875 $^{+0.0016}_{+0.0008}$	0.97	0.1875	3.78	6.50	-
IEC	**63B5**	11mm $^{+0.034mm}_{+0.016mm}$	12.8mm	4mm	55mm	140mm	114mm
	71B14	14mm $^{+0.034mm}_{+0.016mm}$	16.3mm	5mm	55mm	105mm	122mm
	71B5	14mm $^{+0.034mm}_{+0.016mm}$	16.3mm	5mm	55mm	160mm	122mm
	80B14	19mm $^{+0.041mm}_{+0.020mm}$	21.8mm	6mm	86mm	120mm	132mm
	80B5	19mm $^{+0.041mm}_{+0.020mm}$	21.8mm	6mm	86mm	200mm	132mm

		Standard Motor			Brake Motor		
		X	**Y**	**Z**	**X**	**Y**	**Z**
IEC	**63**	7.09	4.76	4.07	9.37	4.76	4.07
	71	8.07	5.47	4.41	10.59	5.47	4.41
	80	8.78	6.22	4.78	11.57	6.22	4.78

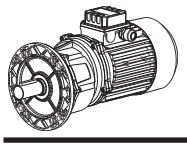

MOTOVARIO™

A33 HA Dimensions

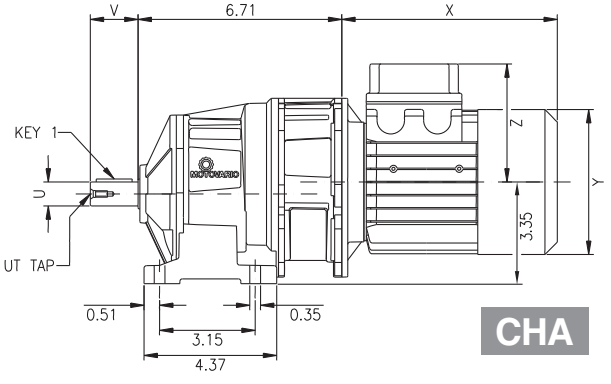

CHA

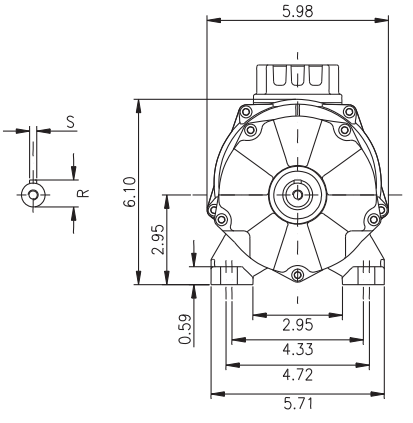

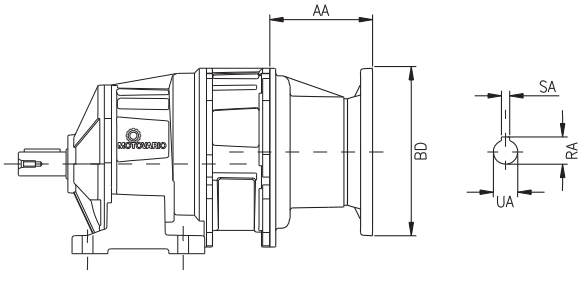

HA

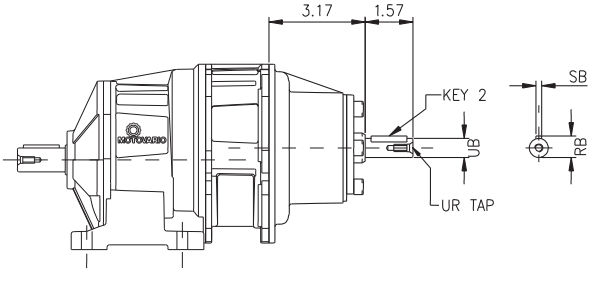

IHA

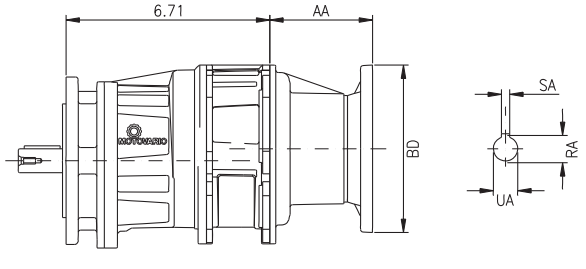

HA...F

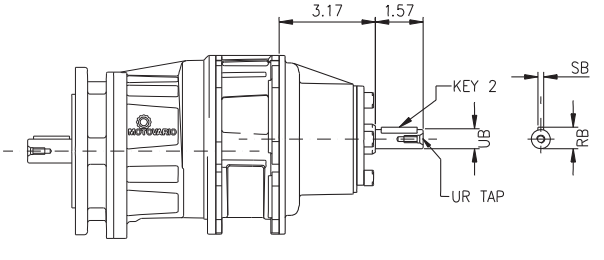

IHA...F

U	R	S	V	UT TAP	KEY 1
0.750 $^{+0.0000}_{-0.0005}$	0.83	0.1875	1.57	1/4-20	3/16x3/16x1-1/8
20mm $^{+0.009mm}_{-0.004mm}$	22.5mm	6mm		M640mm	6 x 6 x 30mm
16mm $^{+0.008mm}_{-0.003mm}$	18mm	5mm		M640mm	5 x 5 x 30mm
14mm $^{+0.008mm}_{-0.003mm}$	16mm	5mm		M630mm	5 x 5 x 20mm

UB	RB	SB	UR TAP	KEY 2
0.750 $^{+0.0000}_{-0.0005}$	0.83	0.1875	1/4-20	3/16x3/16x1-1/8
16mm $^{+0.008mm}_{-0.003mm}$	18mm	5mm	M6	5 x 5 x 30

Dimensions for motor connections available on page 60.

Diameter of motor or motor flange may protrude below mounting feet of reducer. Please check motor connection for conflicts.

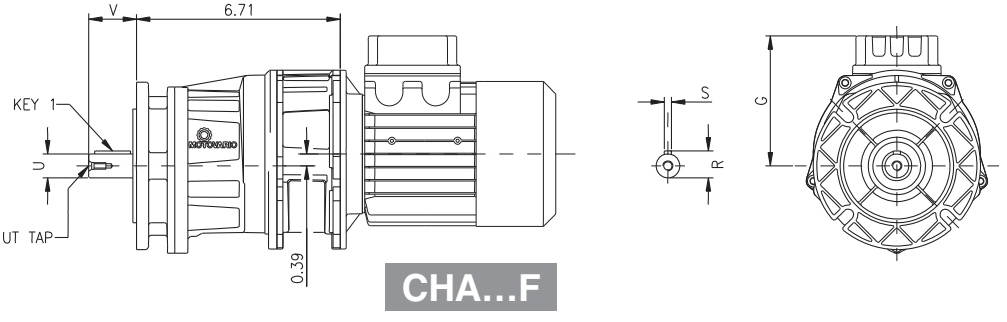

CHA...F

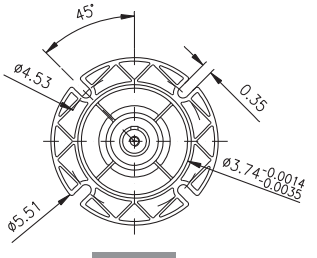

FB

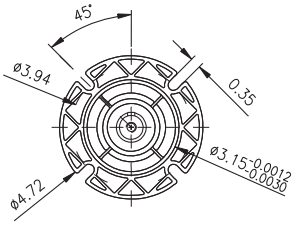

FC

		UA	RA	SA	AA	BD	G
NEMA	**56C**	0.625 $^{+0.0013}_{+0.0006}$	0.71	0.1875	3.78	6.50	-
IEC	**63B5**	11mm $^{+0.034mm}_{+0.016mm}$	12.8mm	4mm	55mm	140mm	114mm
	71B14	14mm $^{+0.034mm}_{+0.016mm}$	16.3mm	5mm	55mm	105mm	122mm
	71B5	14mm $^{+0.034mm}_{+0.016mm}$	16.3mm	5mm	55mm	160mm	122mm

		Standard Motor			Brake Motor		
		X	**Y**	**Z**	**X**	**Y**	**Z**
IEC	**63**	7.09	4.76	4.07	9.37	4.76	4.07
	71	8.07	5.47	4.41	10.59	5.47	4.41
	80	8.78	6.22	4.78	11.57	6.22	4.78

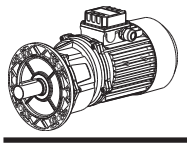

MOTOVARIO™

A41 HA Dimensions

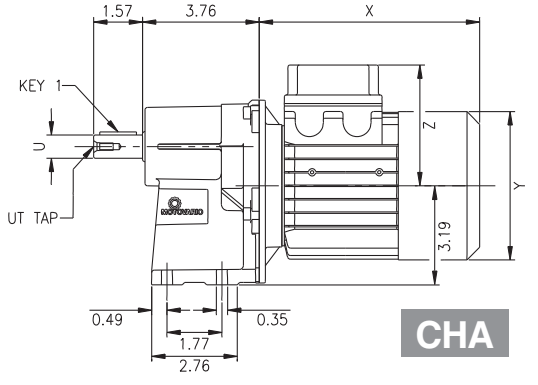

CHA

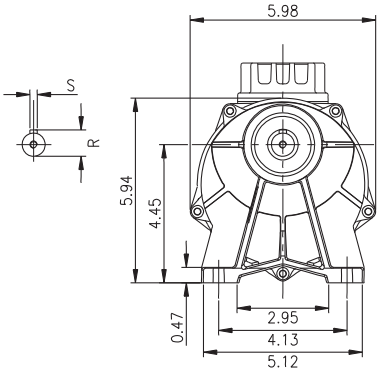

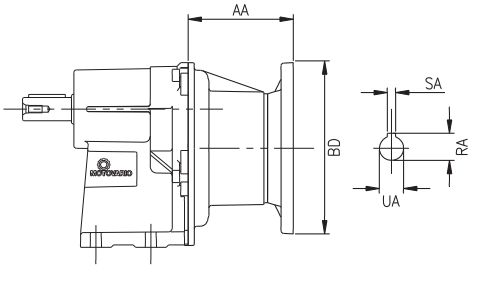

HA

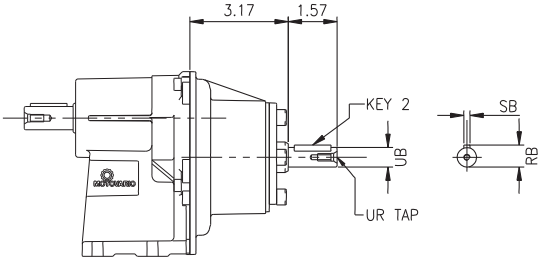

IHA

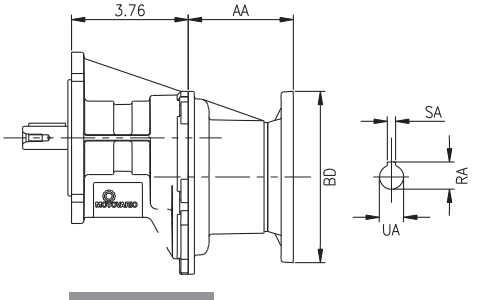

HA…F

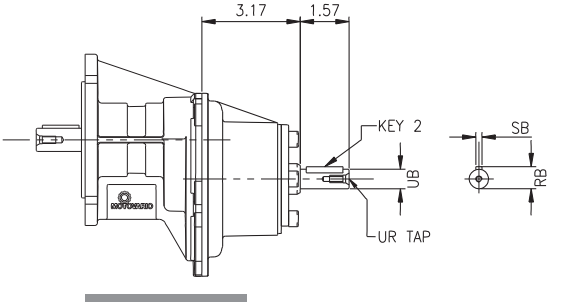

IHA…F

U	R	S	UT TAP	KEY 1
0.750 $^{+0.0000}_{-0.0005}$	0.83	0.1875	1/4-20	3/16x3/16x1-1/8
19mm $^{+0.009mm}_{-0.004mm}$	21.5mm	6mm	M6	6 x 6 x 30

UB	RB	SB	UR TAP	KEY 2
0.750 $^{+0.0000}_{-0.0005}$	0.83	0.1875	1/4-20	3/16x3/16x1-1/8
16mm $^{+0.008mm}_{-0.003mm}$	18mm	5mm	M6	5 x 5 x 30mm

Dimensions for motor connections available on page 60.

Diameter of motor or motor flange may protrude below mounting feet of reducer. Please check motor connection for conflicts.

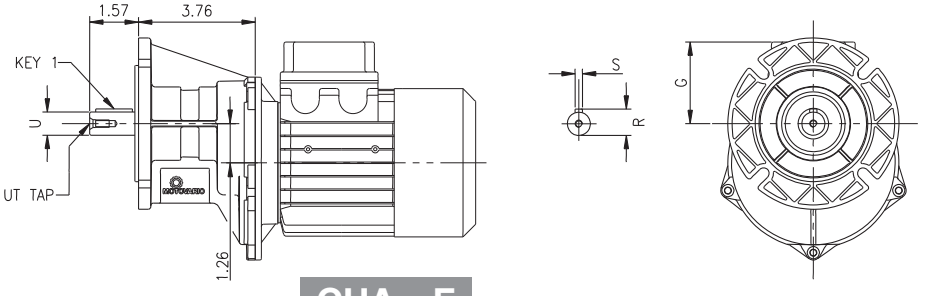

CHA...F

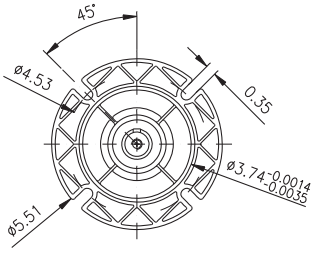

FB

		UA	RA	SA	AA	BD	G
NEMA	**56C**	0.625 $^{+0.0013}_{+0.0006}$	0.71	0.1875	3.78	6.50	-
	140TC	0.875 $^{+0.0016}_{+0.0008}$	0.97	0.1875	3.78	6.50	-
IEC	**63B5**	11mm $^{+0.034mm}_{+0.016mm}$	12.8mm	4mm	55mm	140mm	72mm
	71B14	14mm $^{+0.034mm}_{+0.016mm}$	16.3mm	5mm	55mm	105mm	80mm
	71B5	14mm $^{+0.034mm}_{+0.016mm}$	16.3mm	5mm	55mm	160mm	80mm
	80B14	19mm $^{+0.041mm}_{+0.020mm}$	21.8mm	6mm	86mm	120mm	90mm
	80B5	19mm $^{+0.041mm}_{+0.020mm}$	21.8mm	6mm	86mm	200mm	90mm

		Standard Motor			Brake Motor		
		X	**Y**	**Z**	**X**	**Y**	**Z**
IEC	**63**	7.09	4.76	4.07	9.37	4.76	4.07
	71	8.07	5.47	4.41	10.59	5.47	4.41
	80	8.78	6.22	4.78	11.57	6.22	4.78

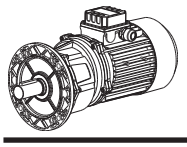

MOTOVARIO™

A42 HA Dimensions

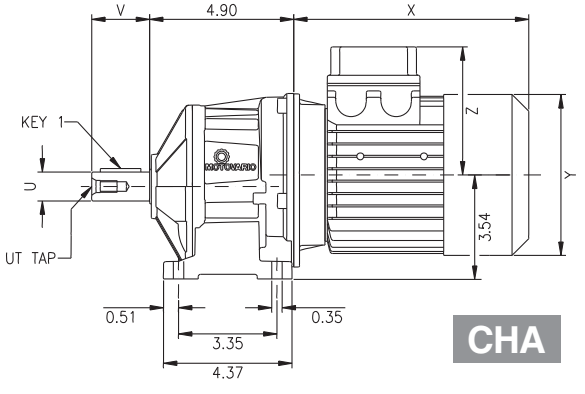

CHA

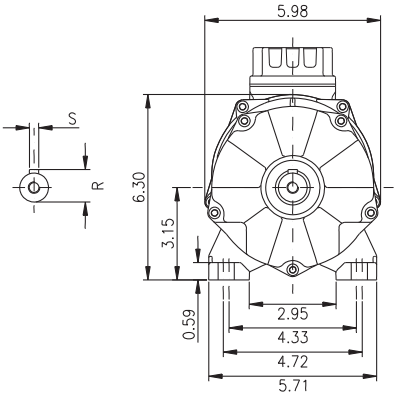

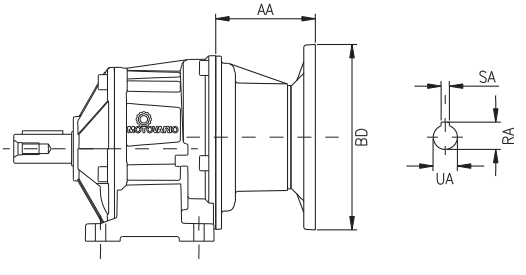

HA

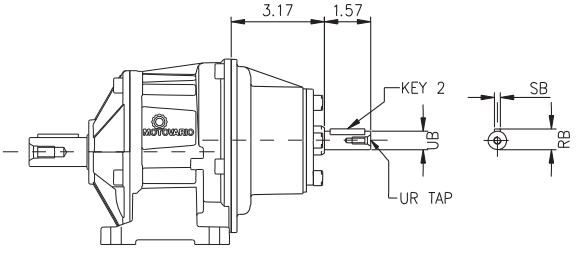

IHA

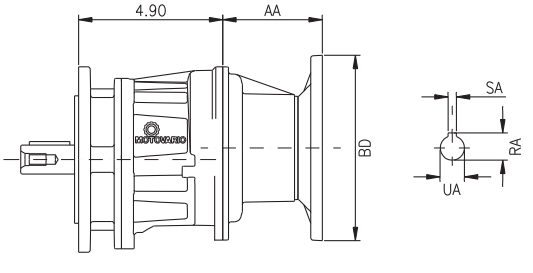

HA…F

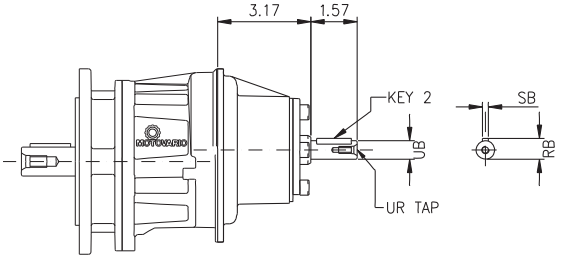

IHA…F

U	R	S	V	UT TAP	KEY 1
1.000 $^{+0.0000}_{-0.0005}$	1.11	0.250	1.97	3/8-16	1/4 x 1/4 x 1-1/2
25mm $^{+0.009mm}_{-0.004mm}$	28mm	8mm	50mm	M10	8 x 7 x 35mm
19mm $^{+0.009mm}_{-0.004mm}$	21.5mm	6mm	40mm	M6	6 x 6 x 30mm

UB	RB	SB	UR TAP	KEY 2
0.750 $^{+0.0000}_{-0.0005}$	0.83	0.1875	1/4-20	3/16x3/16x1-1/8
16mm $^{+0.008mm}_{-0.003mm}$	18mm	5mm	M6	5 x 5 x 30mm

Dimensions for motor connections available on page 60.

Diameter of motor or motor flange may protrude below mounting feet of reducer. Please check motor connection for conflicts.

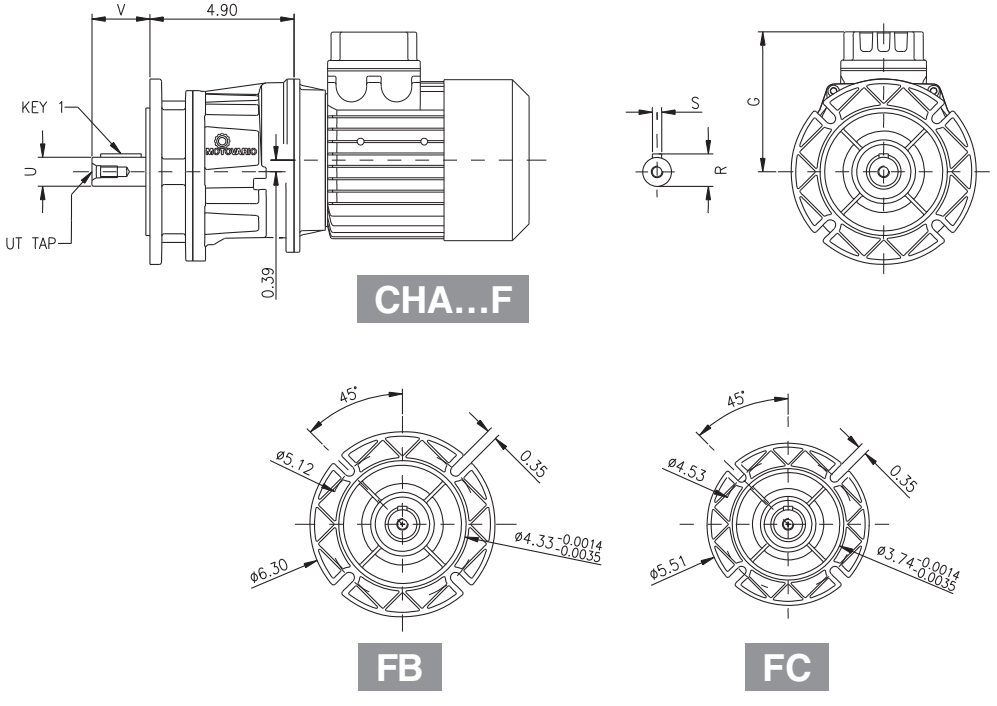

		UA	RA	SA	AA	BD	G
NEMA	**56C**	0.625 $^{+0.0013}_{+0.0006}$	0.71	0.1875	3.78	6.50	-
	140TC	0.875 $^{+0.0016}_{+0.0008}$	0.97	0.1875	3.78	6.50	-
IEC	**63B5**	11mm $^{+0.034mm}_{+0.016mm}$	12.8mm	4mm	55mm	140mm	114mm
	71B14	14mm $^{+0.034mm}_{+0.016mm}$	16.3mm	5mm	55mm	105mm	122mm
	71B5	14mm $^{+0.034mm}_{+0.016mm}$	16.3mm	5mm	55mm	160mm	122mm
	80B14	19mm $^{+0.041mm}_{+0.020mm}$	21.8mm	6mm	86mm	120mm	132mm
	80B5	19mm $^{+0.041mm}_{+0.020mm}$	21.8mm	6mm	86mm	200mm	132mm
	90B14	24mm $^{+0.041mm}_{+0.020mm}$	27.3mm	8mm	86mm	140mm	140mm
	90B5	24mm $^{+0.041mm}_{+0.020mm}$	27.3mm	8mm	86mm	200mm	140mm

		Standard Motor			Brake Motor		
		X	**Y**	**Z**	**X**	**Y**	**Z**
IEC	**63**	7.09	4.76	4.07	9.37	4.76	4.07
	71	8.07	5.47	4.41	10.59	5.47	4.41
	80	8.78	6.22	4.78	11.57	6.22	4.78
	90S	9.33	6.81	5.10	12.32	6.81	5.10
	90L	10.31	6.81	5.10	13.31	6.81	5.10

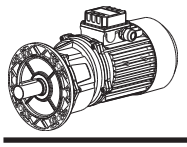

MOTOVARIO™

A43 HA Dimensions

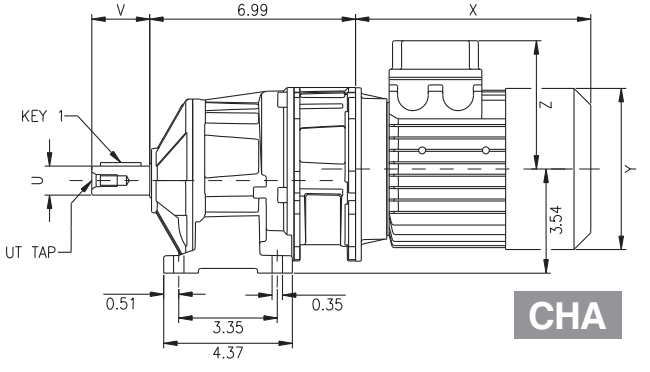

CHA

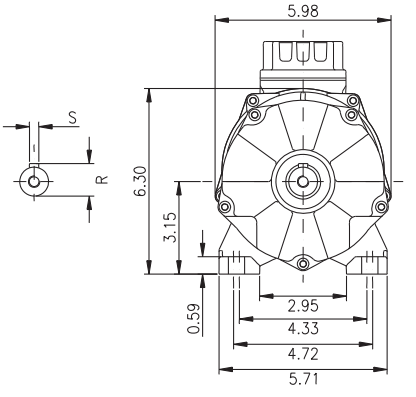

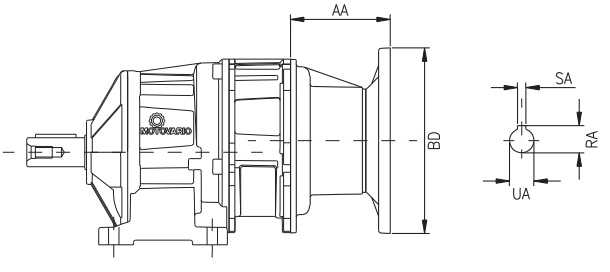

HA

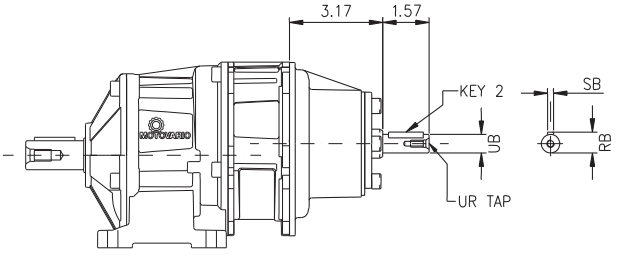

IHA

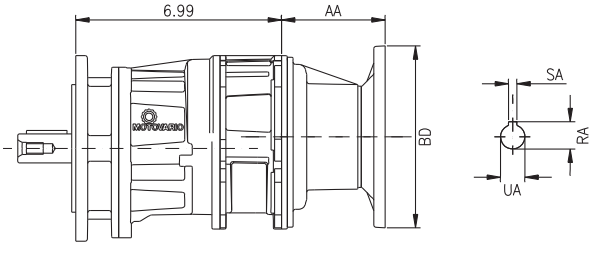

HA...F

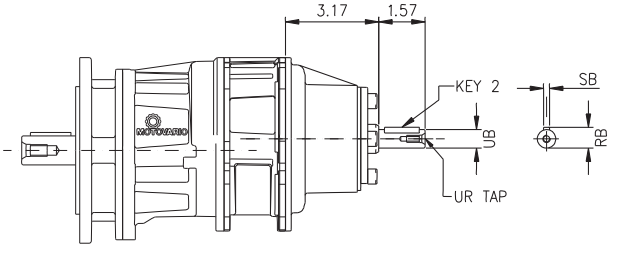

IHA...F

U	R	S	V	UT TAP	KEY 1
1.000 $^{+0.0000}_{-0.0005}$	1.11	0.250	1.97	3/8-16	1/4 x 1/4 x 1-1/2
25mm $^{+0.009mm}_{-0.004mm}$	28mm	8mm	50mm	M10	8 x 7 x 35mm
19mm $^{+0.009mm}_{-0.004mm}$	21.5mm	6mm	40mm	M6	6 x 6 x 30mm

UB	RB	SB	UR TAP	KEY 2
0.750 $^{+0.0000}_{-0.0005}$	0.83	0.1875	1/4-20	3/16x3/16x1-1/8
16mm $^{+0.008mm}_{-0.003mm}$	18mm	5mm	M6	5 x 5 x 30mm

Dimensions for motor connections available on page 60.

Diameter of motor or motor flange may protrude below mounting feet of reducer. Please check motor connection for conflicts.

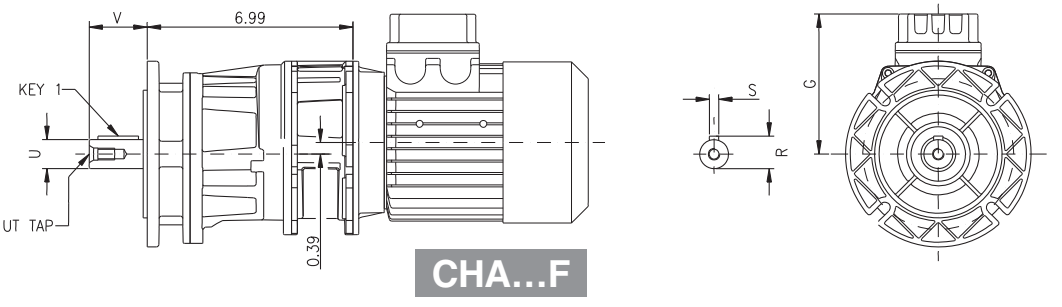

CHA...F

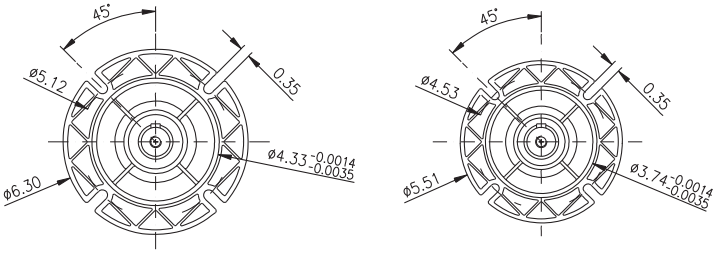

FB FC

		UA	RA	SA	AA	BD	G
NEMA	56C	0.625 +0.0013 +0.0006	0.71	0.1875	3.78	6.50	-
IEC	63B5	11mm +0.034mm +0.016mm	12.8mm	4mm	55mm	140mm	114mm
	71B14	14mm +0.034mm +0.016mm	16.3mm	5mm	55mm	105mm	122mm
	71B5	14mm +0.034mm +0.016mm	16.3mm	5mm	55mm	160mm	122mm
	80B14	19mm +0.041mm +0.020mm	21.8mm	6mm	86mm	120mm	132mm
	80B5	19mm +0.041mm +0.020mm	21.8mm	6mm	86mm	200mm	132mm
	90B14	24mm +0.041mm +0.020mm	27.3mm	8mm	86mm	140mm	140mm
	90B5	24mm +0.041mm +0.020mm	27.3mm	8mm	86mm	200mm	140mm

		Standard Motor			Brake Motor		
		X	Y	Z	X	Y	Z
IEC	63	7.09	4.76	4.07	9.37	4.76	4.07
	71	8.07	5.47	4.41	10.59	5.47	4.41
	80	8.78	6.22	4.78	11.57	6.22	4.78
	90S	9.33	6.81	5.10	12.32	6.81	5.10
	90L	10.31	6.81	5.10	13.31	6.81	5.10

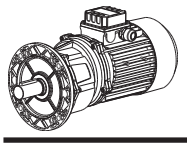

MOTOVARIO™

A51 HA Dimensions

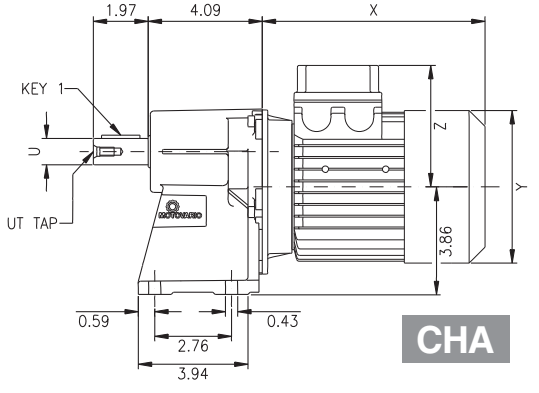

CHA

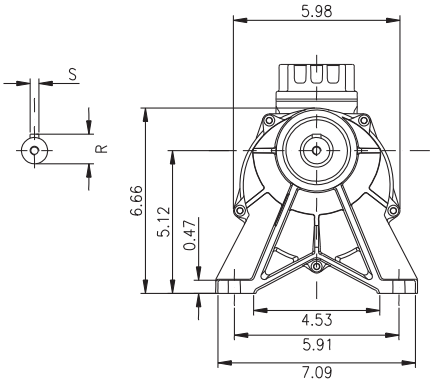

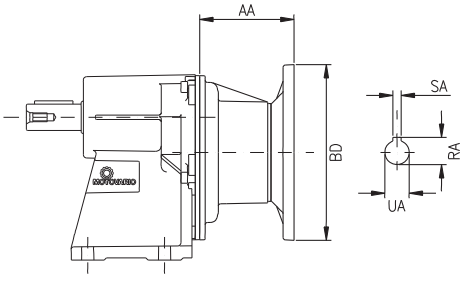

HA

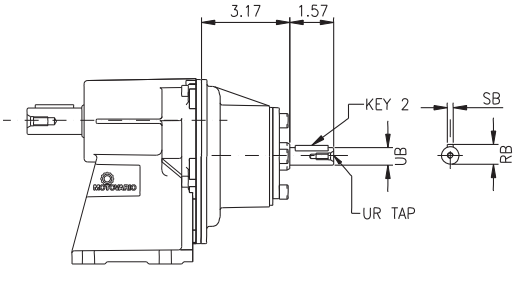

IHA

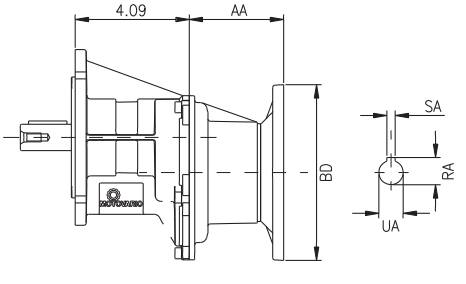

HA…F

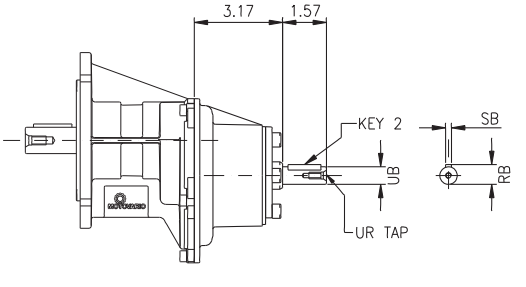

IHA…F

U	R	S	UT TAP	KEY 1
1.000 $^{+0.0000}_{-0.0005}$	1.11	0.250	3/8-16	1/4x1/4x1-1/2
24mm $^{+0.009mm}_{-0.004mm}$	27mm	8mm	M8	8 x 7 x 35mm

UB	RB	SB	UR TAP	KEY 2
0.750 $^{+0.0000}_{-0.0005}$	0.83	0.1875	1/4-20	3/16x3/16x1-1/8
16mm $^{+0.008mm}_{-0.003mm}$	18mm	5mm	M6	5 x 5 x 30

Dimensions for motor connections available on page 60.

Diameter of motor or motor flange may protrude below mounting feet of reducer. Please check motor connection for conflicts.

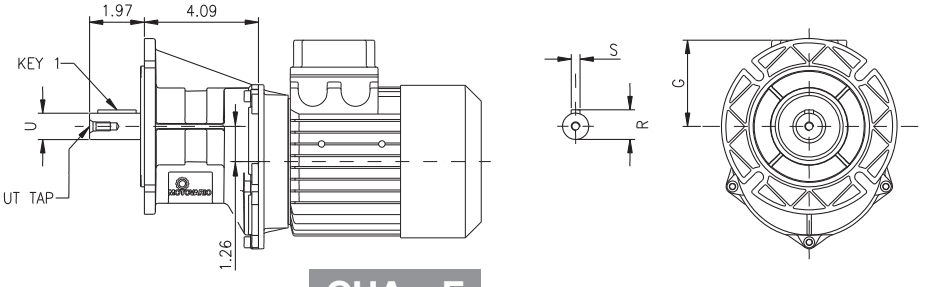

CHA...F

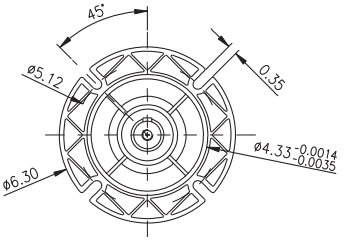

FB

		UA	RA	SA	AA	BD	G
NEMA	**56C**	0.625 $^{+0.0013}_{+0.0006}$	0.71	0.1875	3.78	6.50	-
	140TC	0.875 $^{+0.0016}_{+0.0008}$	0.97	0.1875	3.78	6.50	-
IEC	**63B5**	11mm $^{+0.034mm}_{+0.016mm}$	12.8mm	4mm	55mm	140mm	72mm
	71B14	14mm $^{+0.034mm}_{+0.016mm}$	16.3mm	5mm	55mm	105mm	80mm
	71B5	14mm $^{+0.034mm}_{+0.016mm}$	16.3mm	5mm	55mm	160mm	80mm
	80B14	19mm $^{+0.041mm}_{+0.020mm}$	21.8mm	6mm	86mm	120mm	90mm
	80B5	19mm $^{+0.041mm}_{+0.020mm}$	21.8mm	6mm	86mm	200mm	90mm
	90B14	24mm $^{+0.041mm}_{+0.020mm}$	27.3mm	8mm	86mm	140mm	98mm
	90B5	24mm $^{+0.041mm}_{+0.020mm}$	27.3mm	8mm	86mm	200mm	98mm

		Standard Motor			Brake Motor		
		X	**Y**	**Z**	**X**	**Y**	**Z**
IEC	**63**	7.09	4.76	4.07	9.37	4.76	4.07
	71	8.07	5.47	4.41	10.59	5.47	4.41
	80	8.78	6.22	4.78	11.57	6.22	4.78
	90S	9.33	6.81	5.10	12.32	6.81	5.10
	90L	10.31	6.81	5.10	13.31	6.81	5.10

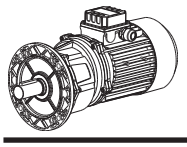

MOTOVARIO™

A52 HA Dimensions

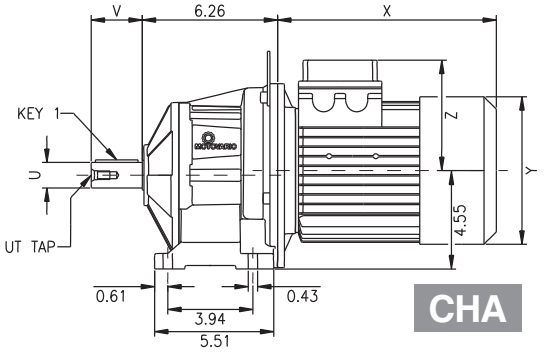

CHA

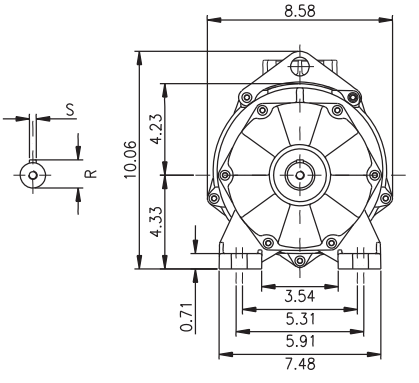

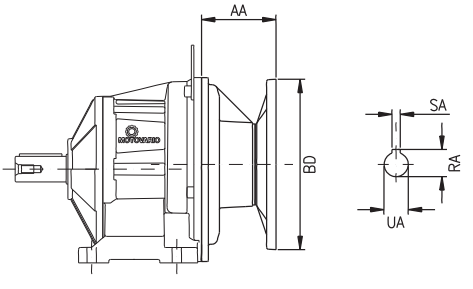

HA

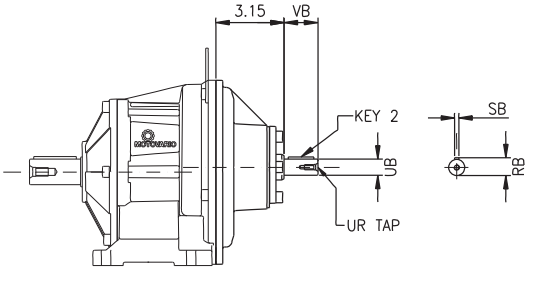

IHA

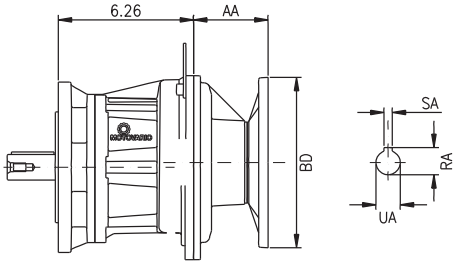

HA...F

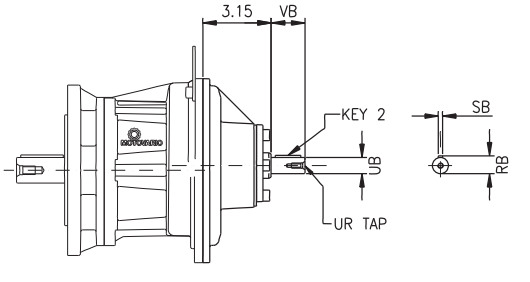

IHA...F

U	R	S	V	UT TAP	KEY 1
1.250 $^{+0.0000}_{-0.0006}$	1.36	0.250	2.36	1/2-13	1/4x1/4x1-7/8
30mm $^{+0.009mm}_{-0.004mm}$	33mm	8mm		M1060mm	8x7x50mm
35mm $^{+0.011mm}_{-0.005mm}$	38mm	10mm	70mm	M12	10 x 8 x 50mm
24mm $^{+0.009mm}_{-0.004mm}$	27mm	8mm	50mm	M8	8 x 7 x 35mm

UB	RB	SB	VB	UR TAP	KEY 2
0.875 $^{+0.0000}_{-0.0005}$	0.96	0.1875	1.97	1/4-20	3/16x3/16x1-1/2
19mm $^{+0.009mm}_{-0.004mm}$	21.5mm	6mm	40mm	M6	6 x 6 x 30

Dimensions for motor connections available on page 60.

Diameter of motor or motor flange may protrude below mounting feet of reducer. Please check motor connection for conflicts.

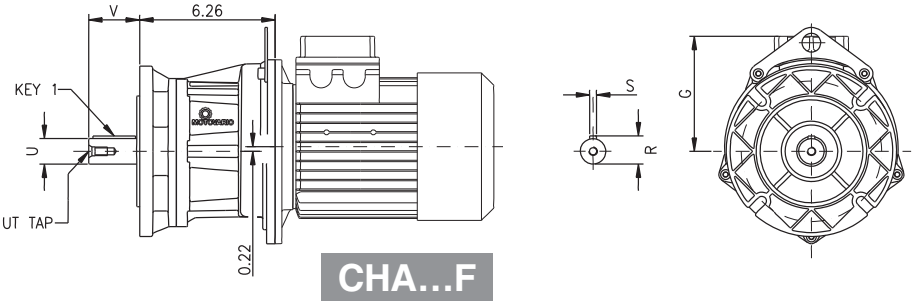

CHA…F

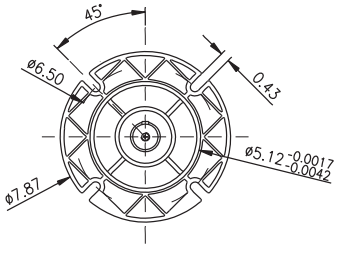

FB

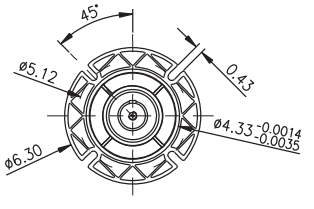

FC

		UA	RA	SA	AA	BD	G
NEMA	56C	0.625 +0.0013 +0.0006	0.71	0.1875	3.98	6.50	-
	140TC	0.875 +0.0016 +0.0008	0.97	0.1875	3.98	6.50	-
	180TC	1.125 +0.0016 +0.0008	1.24	0.2500	3.98	9.00	-
IEC	80B14	19mm +0.041mm +0.020mm	21.8mm	6mm	87.5mm	120mm	127mm
	80B5	19mm +0.041mm +0.020mm	21.8mm	6mm	87.5mm	200mm	127mm
	90B14	24mm +0.041mm +0.020mm	27.3mm	8mm	87.5mm	140mm	135mm
	90B5	24mm +0.041mm +0.020mm	27.3mm	8mm	87.5mm	200mm	135mm
	100B14	28mm +0.041mm +0.020mm	31.3mm	8mm	87.5mm	160mm	144mm
	100B5	28mm +0.041mm +0.020mm	31.3mm	8mm	87.5mm	250mm	144mm
	112B14	28mm +0.041mm +0.020mm	31.3mm	8mm	87.5mm	160mm	159mm
	112B5	28mm +0.041mm +0.020mm	31.3mm	8mm	87.5mm	250mm	159mm

		Standard Motor			Brake Motor		
		X	Y	Z	X	Y	Z
IEC	80	8.58	6.22	4.78	11.42	6.22	4.78
	90S	9.13	6.81	5.10	12.17	6.81	5.10
	90L	10.12	6.81	5.10	13.15	6.81	5.10
	100	11.46	7.52	5.45	14.65	7.52	5.45
	112	12.01	8.31	6.04	15.75	8.31	6.04

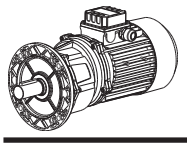

MOTOVARIO™

A53 HA Dimensions

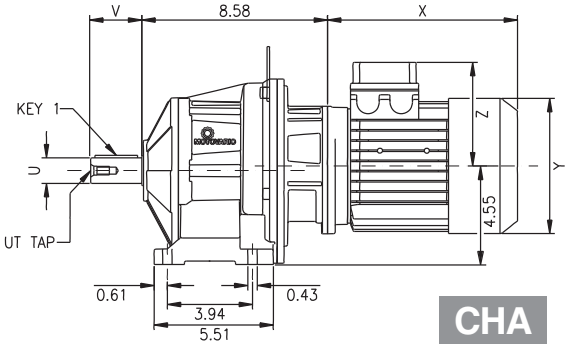

CHA

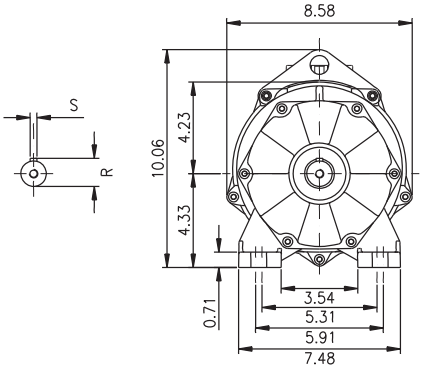

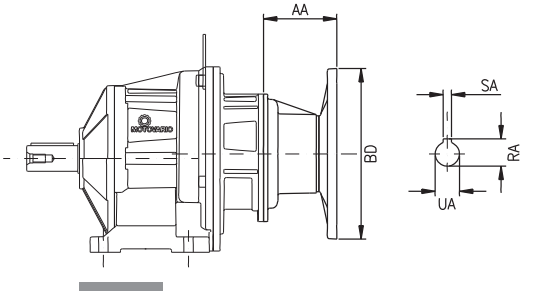

HA

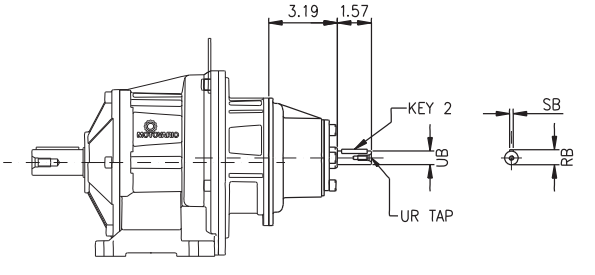

IHA

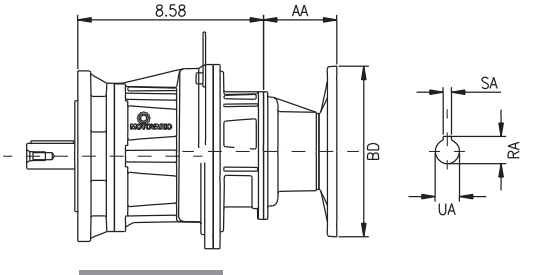

HA…F

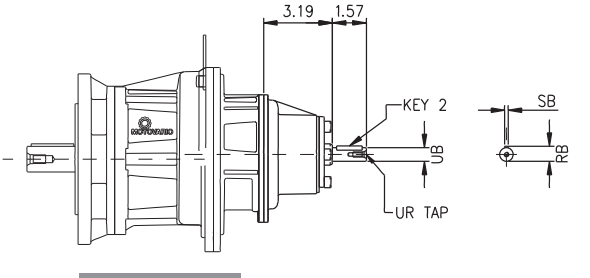

IHA…F

U	R	S	V	UT TAP	KEY 1
1.250 $^{+0.0000}_{-0.0006}$	1.36	0.250	2.36	1/2-13	1/4x1/4x1-7/8
30mm $^{+0.009mm}_{-0.004mm}$	33mm	8mm	60mm	M10	8x7x50mm
35mm $^{+0.011mm}_{-0.005mm}$	38mm	10mm	70mm	M12	10 x 8 x 50mm
24mm $^{+0.009mm}_{-0.004mm}$	27mm	8mm	50mm	M8	8 x 7 x 35mm

UB	RB	SB	UR TAP	KEY 2
0.750 $^{+0.0000}_{-0.0005}$	0.83	0.1875	1/4-20	3/16x3/16x1-1/8
16mm $^{+0.008mm}_{-0.003mm}$	18mm	5mm	M6	5 x 5 x 30

Dimensions for motor connections available on page 60.

Diameter of motor or motor flange may protrude below mounting feet of reducer. Please check motor connection for conflicts.

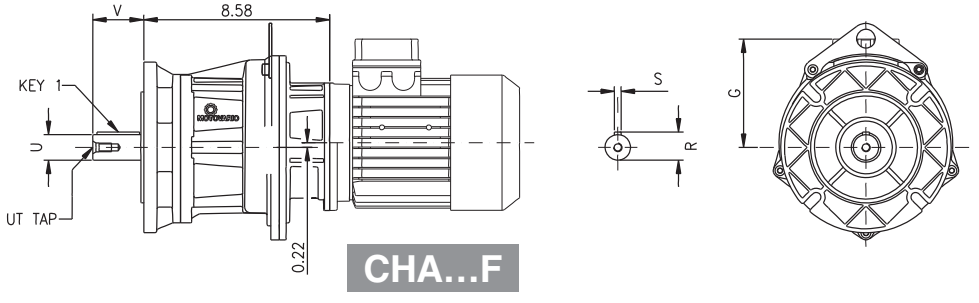

CHA...F

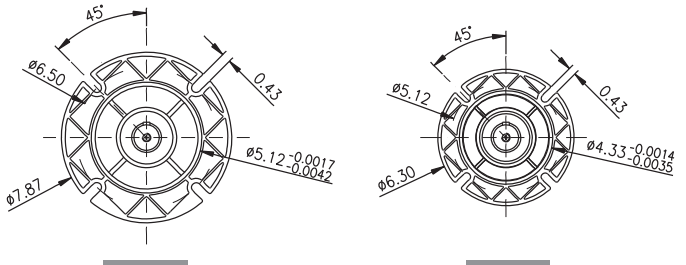

FB

FC

		UA	RA	SA	AA	BD	G
NEMA	**56C**	0.625 +0.0013 +0.0006	0.71	0.1875	3.78	6.50	-
	140TC	0.875 +0.0016 +0.0008	0.97	0.1875	3.78	6.50	-
IEC	**63B5**	11mm +0.034mm +0.016mm	12.8mm	4mm	55mm	140mm	109mm
	71B14	14mm +0.034mm +0.016mm	16.3mm	5mm	55mm	105mm	118mm
	71B5	14mm +0.034mm +0.016mm	16.3mm	5mm	55mm	160mm	108mm
	80B14	19mm +0.041mm +0.020mm	21.8mm	6mm	86mm	120mm	127mm
	80B5	19mm +0.041mm +0.020mm	21.8mm	6mm	86mm	200mm	127mm
	90B14	24mm +0.041mm +0.020mm	27.3mm	8mm	86mm	140mm	135mm
	90B5	24mm +0.041mm +0.020mm	27.3mm	8mm	86mm	200mm	135mm

		Standard Motor			Brake Motor		
		X	**Y**	**Z**	**X**	**Y**	**Z**
IEC	**63**	7.09	4.76	4.07	9.37	4.76	4.07
	71	8.07	5.47	4.41	10.59	5.47	4.41
	80	8.58	6.22	4.78	11.42	6.22	4.78
	90S	9.33	6.81	5.10	12.32	6.81	5.10
	90L	10.31	6.81	5.10	13.31	6.81	5.10

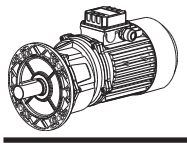

MOTOVARIO™

A61 HA Dimensions

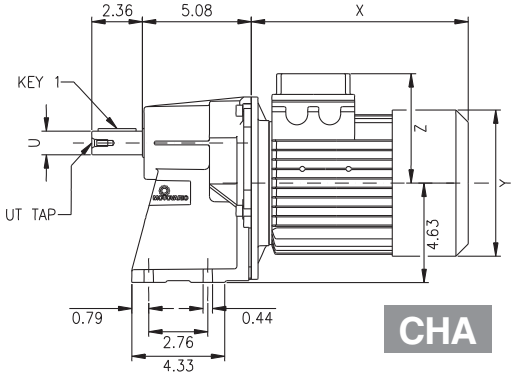

CHA

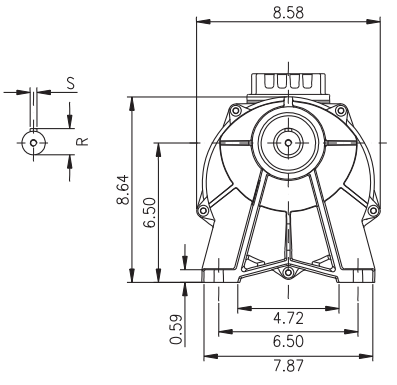

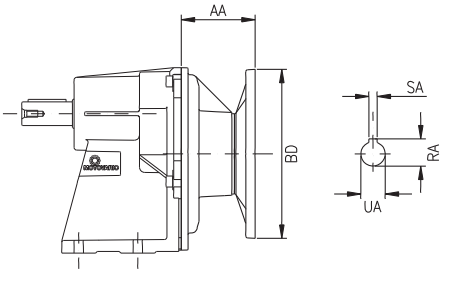

HA

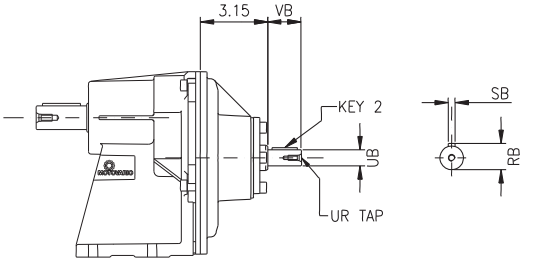

IHA

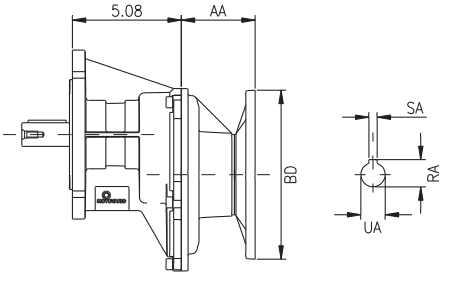

HA…F

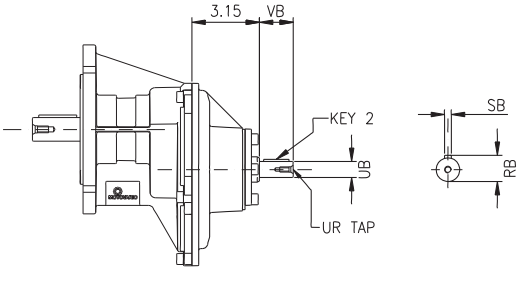

IHA…F

U	R	S	UT TAP	KEY 1
1.250 $^{+0.0000}_{-0.0006}$	1.36	0.250	1/2-13	1/4x1/4x1-7/8
28mm $^{+0.009mm}_{-0.004mm}$	31mm	8mm	M8	8 x 7 x 45mm

UB	RB	SB	VB	UR TAP	KEY 2
0.875 $^{+0.0000}_{-0.0005}$	0.96	0.1875	1.97	1/4-20	3/16x3/16x1-1/2
19mm $^{+0.009mm}_{-0.004mm}$	21.5mm	6mm	40mm	M6	6 x 6 x 30mm

Dimensions for motor connections available on page 60.

Diameter of motor or motor flange may protrude below mounting feet of reducer. Please check motor connection for conflicts.

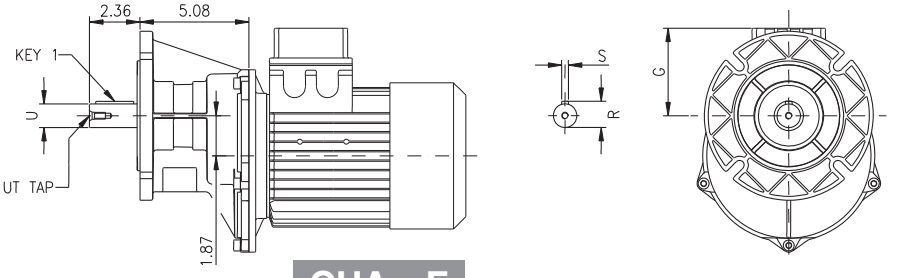

CHA...F

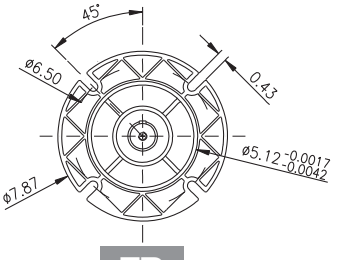

FB

		UA	RA	SA	AA	BD	G
NEMA	56C	0.625 $^{+0.0013}_{+0.0006}$	0.71	0.1875	3.98	6.50	-
	140TC	0.875 $^{+0.0016}_{+0.0008}$	0.97	0.1875	3.98	6.50	-
	180TC	1.125 $^{+0.0016}_{+0.0008}$	1.24	0.2500	3.98	9.00	-
IEC	80B14	19mm $^{+0.041mm}_{+0.020mm}$	21.8mm	6mm	87.5mm	120mm	74mm
	80B5	19mm $^{+0.041mm}_{+0.020mm}$	21.8mm	6mm	87.5mm	200mm	74mm
	90B14	24mm $^{+0.041mm}_{+0.020mm}$	27.3mm	8mm	87.5mm	140mm	82mm
	90B5	24mm $^{+0.041mm}_{+0.020mm}$	27.3mm	8mm	87.5mm	200mm	82mm
	100B14	28mm $^{+0.041mm}_{+0.020mm}$	31.3mm	8mm	87.5mm	160mm	91mm
	100B5	28mm $^{+0.041mm}_{+0.020mm}$	31.3mm	8mm	87.5mm	250mm	91mm
	112B14	28mm $^{+0.041mm}_{+0.020mm}$	31.3mm	8mm	87.5mm	160mm	106mm
	112B5	28mm $^{+0.041mm}_{+0.020mm}$	31.3mm	8mm	87.5mm	250mm	106mm

		Standard Motor			Brake Motor		
		X	Y	Z	X	Y	Z
IEC	80	8.58	6.22	4.78	11.42	6.22	4.78
	90S	9.13	6.81	5.10	12.17	6.81	5.10
	90L	10.12	6.81	5.10	13.15	6.81	5.10
	100	11.46	7.52	5.45	14.65	7.52	5.45
	112	12.01	8.31	6.04	15.75	8.31	6.04

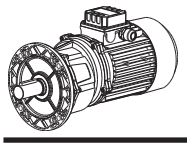

MOTOVARIO™

A62 HA Dimensions

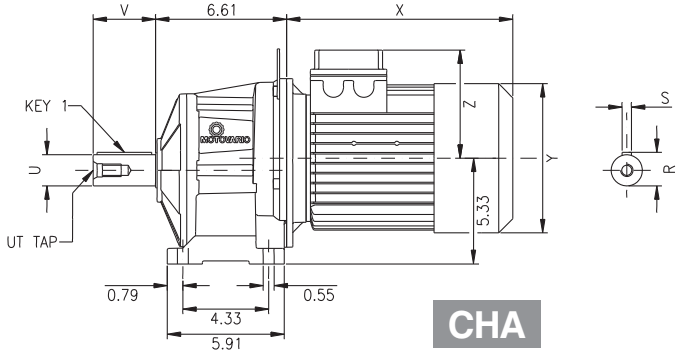

CHA

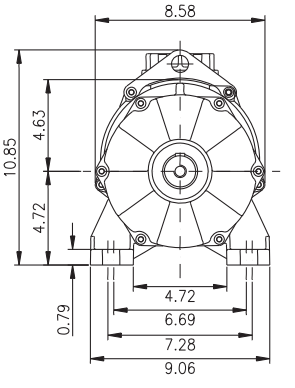

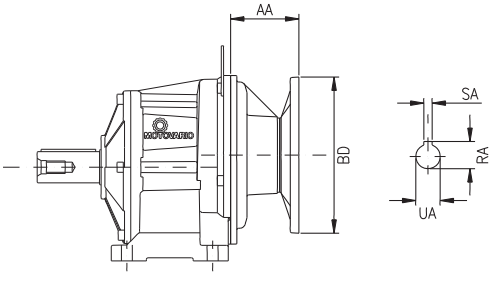

HA

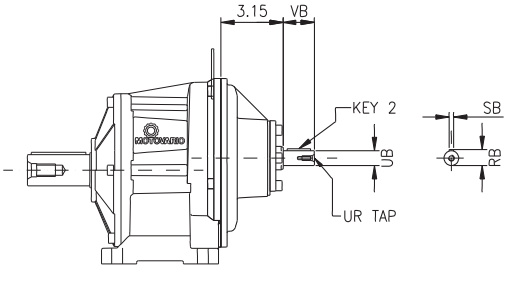

IHA

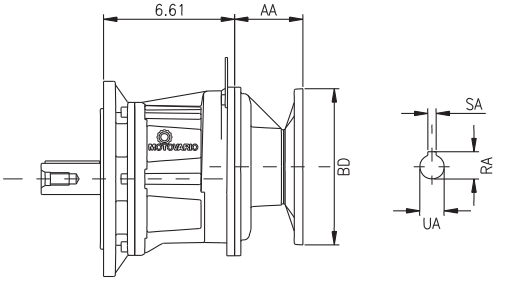

HA…F

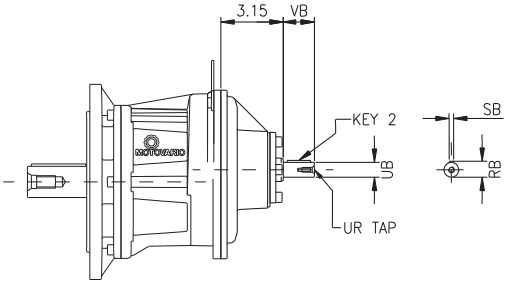

IHA…F

U	R	S	V	UT TAP	KEY 1
1.625 $^{+0.0000}_{-0.0006}$	1.79	0.375	3.15	5/8-11	3/8x3/8x2-1/2
40mm $^{+0.011mm}_{+0.005mm}$	43mm	12mm	80mm	M16	12 x 8 x 70mm
28mm $^{+0.009mm}_{-0.004mm}$	31mm	8mm	60mm	M10	8 x 7 x 45mm

UB	RB	SB	VB	UR TAP	KEY 2
0.875 $^{+0.0000}_{-0.0005}$	0.96	0.1875	1.97	1/4-20	3/16x3/16x1-1/2
19mm $^{+0.009mm}_{-0.004mm}$	21.5mm	6mm	40mm	M6	6 x 6 x 30mm

Dimensions for motor connections available on page 60.

Diameter of motor or motor flange may protrude below mounting feet of reducer. Please check motor connection for conflicts.

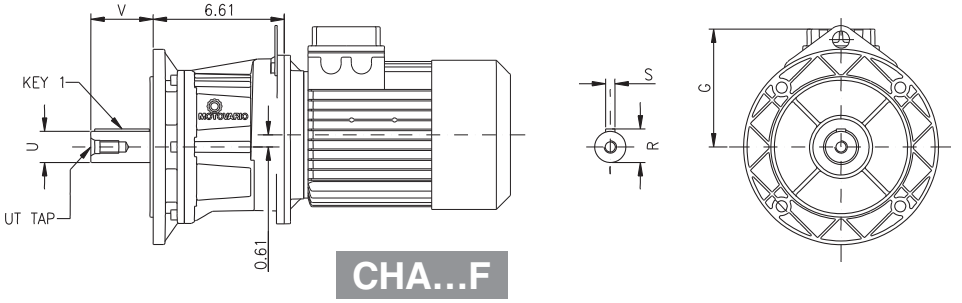

CHA...F

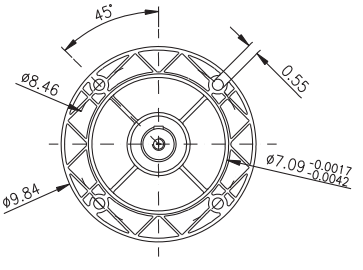

FB

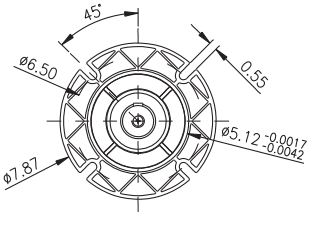

FC

		UA	RA	SA	AA	BD	G
NEMA	56C	0.625 $^{+0.0013}_{+0.0006}$	0.71	0.1875	3.98	6.50	-
	140TC	0.875 $^{+0.0016}_{+0.0008}$	0.97	0.1875	3.98	6.50	-
	180TC	1.125 $^{+0.0016}_{+0.0008}$	1.24	0.2500	3.98	9.00	-
IEC	80B14	19mm $^{+0.041mm}_{+0.020mm}$	21.8mm	6mm	87.5mm	120mm	137mm
	80B5	19mm $^{+0.041mm}_{+0.020mm}$	21.8mm	6mm	87.5mm	200mm	137mm
	90B14	24mm $^{+0.041mm}_{+0.020mm}$	27.3mm	8mm	87.5mm	140mm	145mm
	90B5	24mm $^{+0.041mm}_{+0.020mm}$	27.3mm	8mm	87.5mm	200mm	145mm
	100B14	28mm $^{+0.041mm}_{+0.020mm}$	31.3mm	8mm	87.5mm	160mm	154mm
	100B5	28mm $^{+0.041mm}_{+0.020mm}$	31.3mm	8mm	87.5mm	250mm	154mm
	112B14	28mm $^{+0.041mm}_{+0.020mm}$	31.3mm	8mm	87.5mm	160mm	169mm
	112B5	28mm $^{+0.041mm}_{+0.020mm}$	31.3mm	8mm	87.5mm	250mm	169mm

		Standard Motor			Brake Motor		
		X	Y	Z	X	Y	Z
IEC	80	8.58	6.22	4.78	11.42	6.22	4.78
	90S	9.13	6.81	5.10	12.17	6.81	5.10
	90L	10.12	6.81	5.10	13.15	6.81	5.10
	100	11.46	7.52	5.45	14.65	7.52	5.45
	112	12.01	8.31	6.04	15.75	8.31	6.04

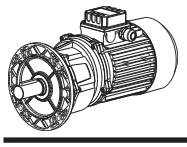

MOTOVARIO™

A63 HA Dimensions

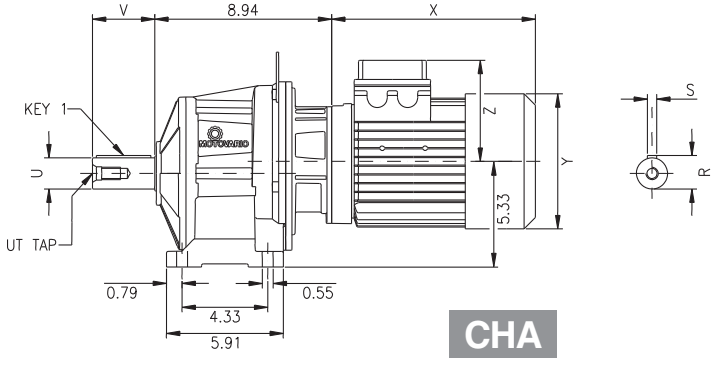

CHA

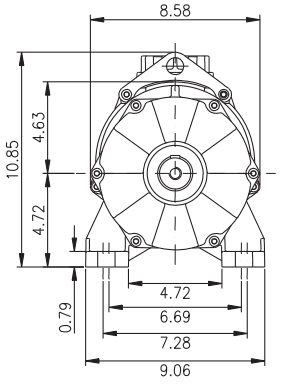

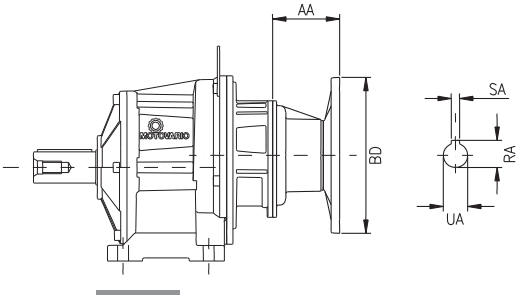

HA

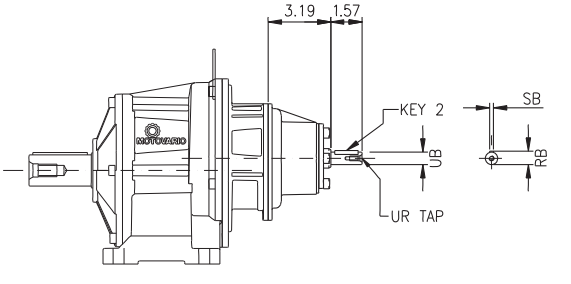

IHA

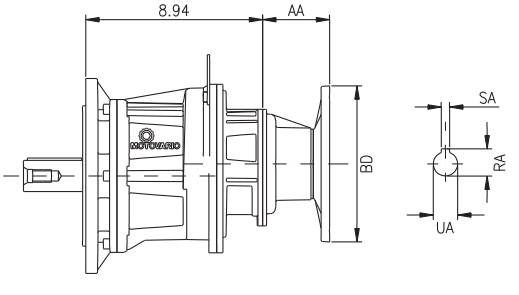

HA...F

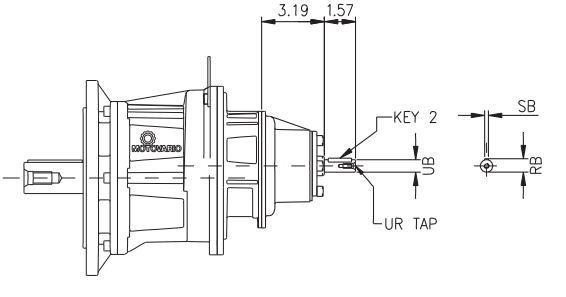

IHA...F

U	R	S	V	UT TAP	KEY 1
1.625 $^{+0.0000}_{-0.0006}$	1.79	0.375	3.15	5/8-11	3/8x3/8x2-1/2
40mm $^{+0.011mm}_{+0.005mm}$	43mm	12mm	80mm	M16	12 x 8 x 70mm
28mm $^{+0.009mm}_{-0.004mm}$	31mm	8mm	60mm	M10	8 x 7 x 45mm

UB	RB	SB	UR TAP	KEY 2
0.750 $^{+0.0000}_{-0.0005}$	0.83	0.1875	1/4-20	3/16x3/16x1-1/8
16mm $^{+0.008mm}_{-0.003mm}$	18mm	5mm	M6	5 x 5 x 30mm

Dimensions for motor connections available on page 60.

Diameter of motor or motor flange may protrude below mounting feet of reducer. Please check motor connection for conflicts.

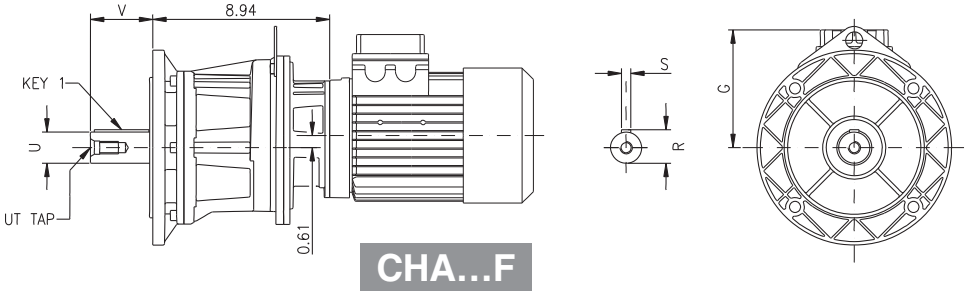

CHA...F

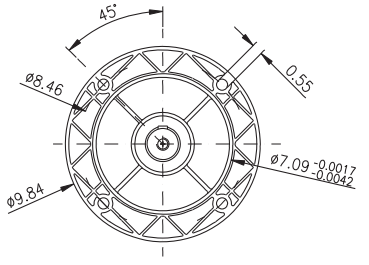

FB

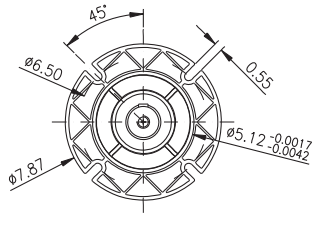

FC

		UA	RA	SA	AA	BD	G
NEMA	56C	0.625 +0.0013 +0.0006	0.71	0.1875	3.78	6.50	-
	140TC	0.875 +0.0016 +0.0008	0.97	0.1875	3.78	6.50	-
IEC	63B5	11mm +0.034mm +0.016mm	12.8mm	4mm	55mm	140mm	119mm
	71B14	14mm +0.034mm +0.016mm	16.3mm	5mm	55mm	105mm	128mm
	71B5	14mm +0.034mm +0.016mm	16.3mm	5mm	55mm	160mm	128mm
	80B14	19mm +0.041mm +0.020mm	21.8mm	6mm	86mm	120mm	137mm
	80B5	19mm +0.041mm +0.020mm	21.8mm	6mm	86mm	200mm	137mm
	90B14	24mm +0.041mm +0.020mm	27.3mm	8mm	86mm	140mm	145mm
	90B5	24mm +0.041mm +0.020mm	27.3mm	8mm	86mm	200mm	145mm

		Standard Motor			Brake Motor		
		X	Y	Z	X	Y	Z
IEC	63	7.09	4.76	4.07	9.37	4.76	4.07
	71	8.07	5.47	4.41	10.59	5.47	4.41
	80	8.58	6.22	4.78	11.42	6.22	4.78
	90S	9.13	6.81	5.10	12.17	6.81	5.10
	90L	10.12	6.81	5.10	13.15	6.81	5.10

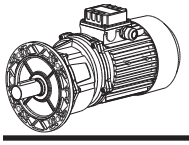

MOTOVARIO™

Motor Connections

Input Flange

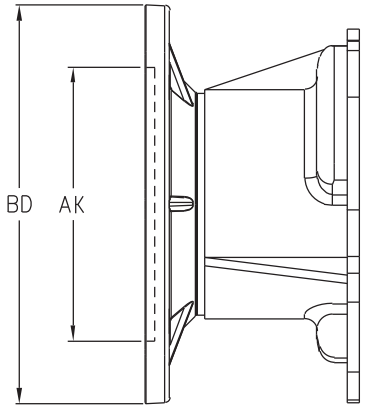

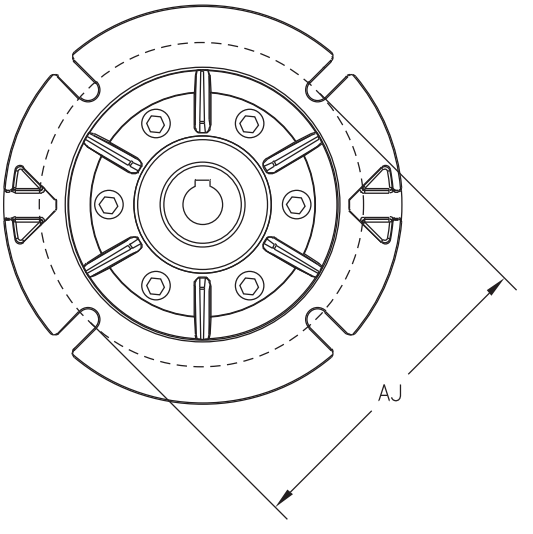

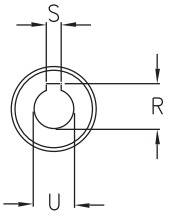

Input Flange Dimensions

		AJ	AK	BD	R	S	U
NEMA	56C	5.875	4.50	6.50	0.71	0.1875	0.625 +0.0013 +0.0006
	140TC	5.875	4.50	6.50	0.97	0.1875	0.875 +0.0016 +0.0008
	180TC	7.250	8.50	9.00	1.24	0.2500	1.125 +0.0016 +0.0008
IEC	63 B5	115mm	95mm	140mm	12.8mm	4mm	11mm +0.034mm +0.016mm
	71B14	85mm	70mm	105mm	16.3mm	5mm	14mm +0.034mm +0.016mm
	71 B5	130mm	110mm	160mm	16.3mm	5mm	14mm +0.034mm +0.016mm
	80B14	100mm	80mm	120mm	21.8mm	6mm	19mm +0.041mm +0.020mm
	80 B5	165mm	130mm	200mm	21.8mm	6mm	19mm +0.041mm +0.020mm
	90B14	115mm	95mm	140mm	27.3mm	8mm	24mm +0.041mm +0.020mm
	90 B5	165mm	130mm	200mm	27.3mm	8mm	24mm +0.041mm +0.020mm
	100B14	130mm	110mm	160mm	31.3mm	8mm	28mm +0.041mm +0.020mm
	100 B5	215mm	180mm	250mm	31.3mm	8mm	28mm +0.041mm +0.020mm
	112B14	130mm	110mm	160mm	31.3mm	8mm	28mm +0.041mm +0.020mm
	112 B5	215mm	180mm	250mm	31.3mm	8mm	28mm +0.041mm +0.020mm

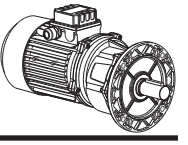

Notes HA

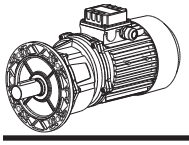

MOTOVARIO™

HA Notes

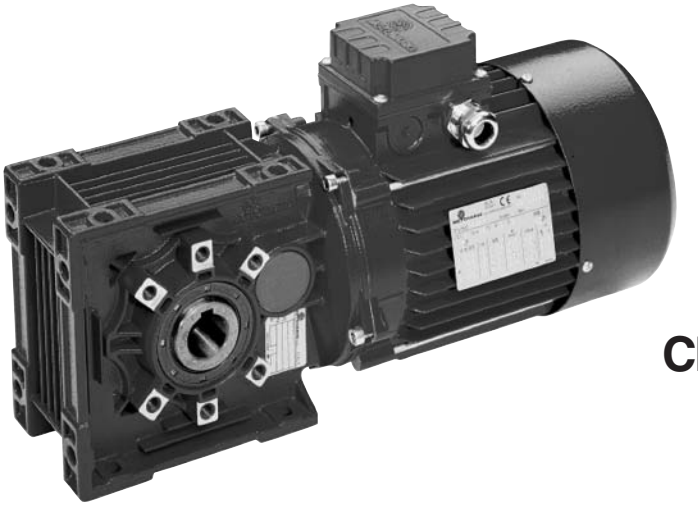

CBA



BA

IBA



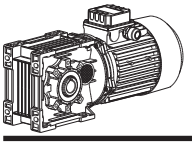

MOTOVARIO™

BA Versions

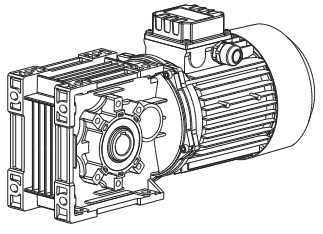

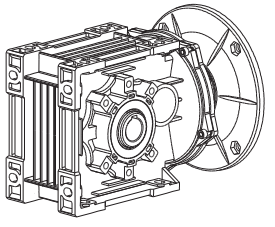

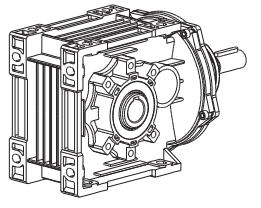

Double Stage
Hollow Output Bore
A42- A52- A72

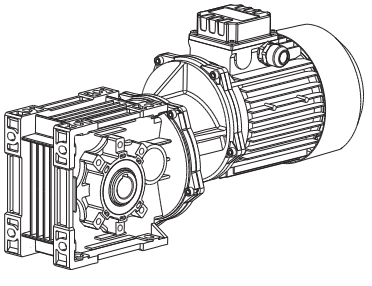

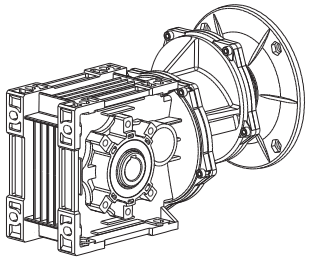

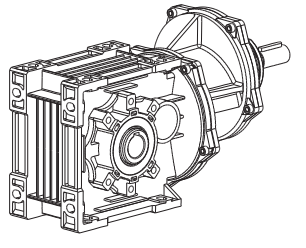

Triple Stage
Hollow Output Bore
A43- A53- A73

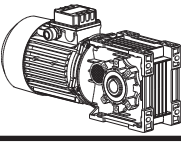

CBA	52	C	FB	1	31.63	T	90S4	Pos2	1.500	B3
1	2	3	4	5	6	7	8	9	10	11

1. Style

CBA
Helical Bevel Gearmotor Motovario three-phase integral motor is permanently attached to the reducer. The motor and the reducer are supplied together.

BA
Helical Bevel Gear Reducer with Input Quill C-face-type input flange allows the reducer to accept standard NEMA and IEC motors with c-face adapters. The motor is directly coupled to the reducer by an input quill. Motors are supplied separately from the gear reducers.

IBA
Helical Bevel Gear Reducer with Input Shaft Inch-standard or metric dimensioned input shaft allows for standard sprocket or pulley attachment, direct motor coupling or other types of free input.

2. Size

Two Stage Reduction	A42	A52	A72
Three Stage Reduction	A53	A73	

3. Output Style

- **C** Hollow output bore
- **D** Single extension output shaft, right side (all side references are viewed from input)
- **S** Single extension output shaft, left side
- **P** Double extension output shaft
- **M** Shrink disk mounting, left side bore

4. Output Mounting Flange

FA, FB, FC Helical Bevel units have different output flange choices, depending on the size of the gear reducer. Output mounting flanges are optional accessories that bolt directly on to the reducer housing. Please refer to the dimensional drawings for details, pages 84-93.

5. Output Flange Position

Please refer to page 66 for output flange mounting position specifications.

6. Reduction Ratio

The reduction ratio determines the output speed of the reducer. Ratios will vary depending on the size of the reducer. For a list of reduction ratios, please refer to pages 68-69 or 70-75.

7. Input Type

T
Three Phase Integral Motor CBA units are supplied with Motovario three-phase motors. Please check motor size compatibility on pages 68-69.

P
IEC Input Coupling BA units supplied with IEC standard motor inputs must specify the frame size of the mounted motor. BA units are available with the B5 or B14 style IEC input flange. Please check input flange availability on pages 68-69.

N
NEMA Input Coupling BA units supplied with NEMA standard c-face motor inputs must specify the frame size of the mounted motor. Please check input flange availability on pages 68-69.

UB
Input Shaft For IBA units, please specify the diameter of the input shaft in inches or millimeters. Input shaft sizes are specified on the gear reducer dimension pages, .

8. Integral Motor Description

Motor Frame Size, Power and Speed The motor frame size, power and speed must be specified if ordering a CBA style gearmotor. Please check the gearmotor ratings on pages 76-82 for gearmotor specifications.

or

Input Coupling Frame Size The motor frame size, either IEC or NEMA, must be specified if ordering a BA style gear reducer. Please check with the motor supplier for the correct frame size.

9. Motor Mounting Position

Integral Motors The motor mounting position is specified only when ordering the CBA style units. The motor mounting position indicates the position of the terminal box and the wire strain relief connection. The motor mounting position always relates to the gear reducer in position B3. Please refer to page 66 for motor mounting position specifications.

10. Output Shaft Diameter

Please specify the diameter of the output shaft in inches or millimeters. Output shaft sizes are specified on the gear reducer dimension pages, 84-93.

11. Reducer Mounting Position

The mounting position of the gear reducer or gearmotor must be specified when ordering for the proper lubrication amount. Please refer to page 66 for mounting positions.

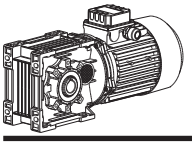

MOTOVARIO™

BA Mounting Positions

B3	B6	V5	V6
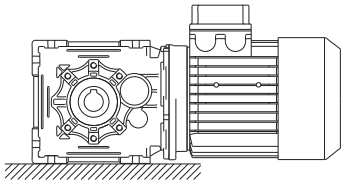	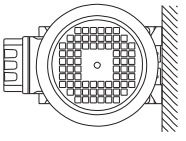	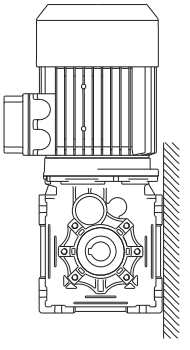	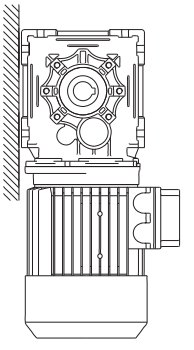
B8	B7		
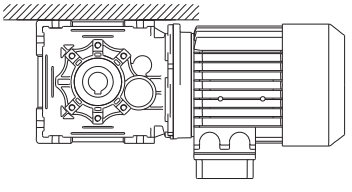	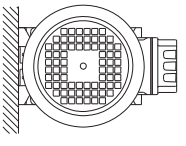		

Mounting position must be specified when ordering to provide the proper gear configuration and lubrication quantity. If mounting position is not specified, gear reducers are supplied in position B3 (standard position).

BA Terminal Box Positions

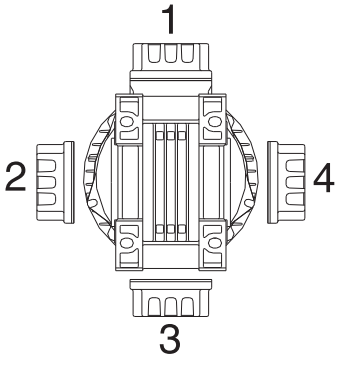

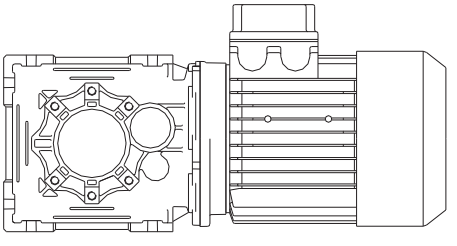

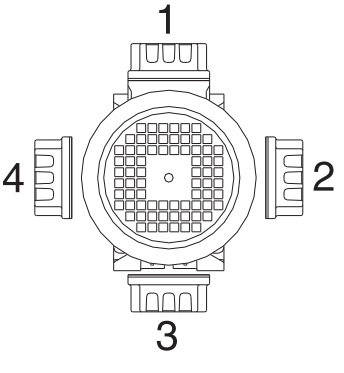

The motor terminal box position must be specified, according to the diagram, when ordering gearmotors.
If terminal box position is not specified, the gearmotor is supplied with the terminal box in position 1.
Terminal box positions always relate to the gear reducer mounted in position B3.
For vertical mounting positions, refer to the Critical Applications section of this catalog, page 126.
For positions not specified in this catalog, please contact Motovario.

BA Flange Positions

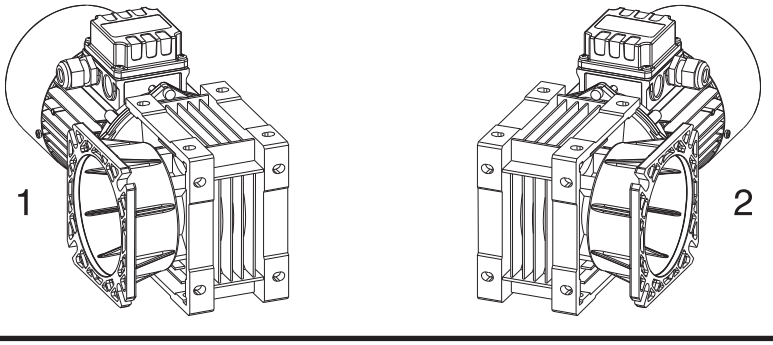

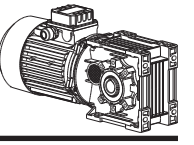

Output Styles BA

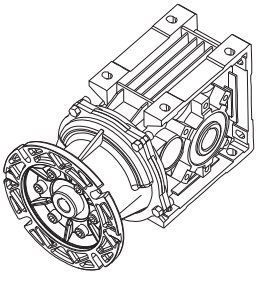

C
Hollow Output Bore

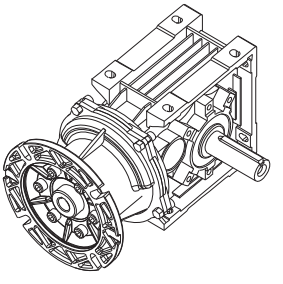

D
Single Output Shaft
Right Side Extension

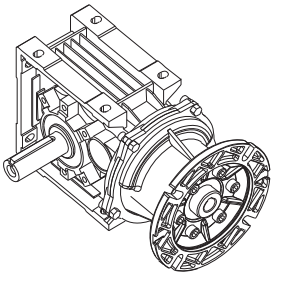

S
Single Output Shaft
Left Side Extension

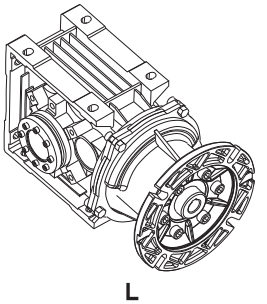

L
Shrink Disk Mounting
Right Side Hollow Bore

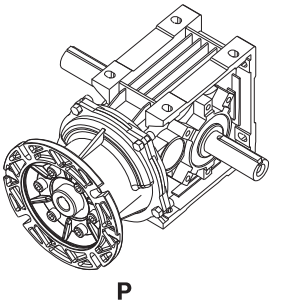

P
Double Output Shaft

Direction of Rotation BA

Helical bevel gear reducers are supplied with standard rotation:

Direction 1: standard for all BA42, BA52 and BA53 shaft positions

standard for BA72 and BA73 when output is configured as D, P, C or L (see above)

Direction 2: standard for BA72 and BA73 when output is configured as S (see above)

It must be noted that Motovario helical bevel gear reducers can run in either direction

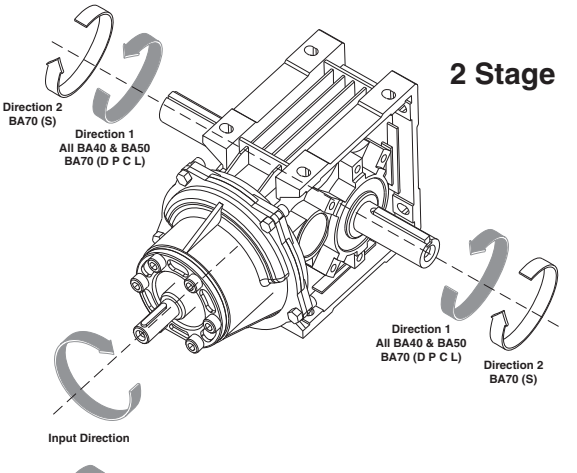

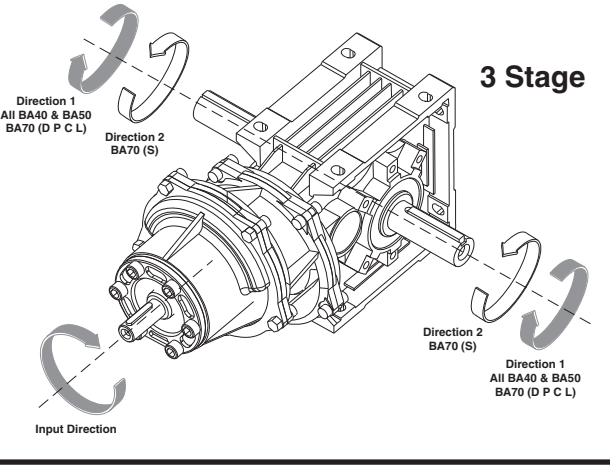

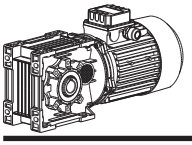

MOTOVARIO™

BA Input Types

CBA-BA 42

	NEMA		IEC		
i	56C	140TC	063	071	080
7.62			B5-B10	B5/B14-B10	B5/B14-B10
10.62			B5-B10	B5/B14-B10	B5/B14-B10
12.95			B5-B10	B5/B14-B10	B5/B14-B10
14.46			B5-B10	B5/B14-B10	B5/B14-B10
16.47			B5-B10	B5/B14-B10	B5/B14-B10
22.97			B5-B10	B5/B14-B10	B5/B14-B10
28.00			B5-B10	B5/B14-B10	B5/B14-B10
31.27			B5-B10	B5/B14-B10	B5/B14-B10
33.78			B5-B10	B5/B14-B10	B5/B14-B10
47.12			B5-B10	B5/B14-B10	B5/B14-B10
57.43			B5-B10	B5/B14-B10	B5/B14-B10
64.13			B5-B10	B5/B14-B10	B5/B14-B10
78.17			B5-B10	B5/B14-B10	

CBA-BA 52

	NEMA		IEC			
i	56C	140TC	063	071	080	090
7.91			B5-B10	B5/B14-B10	B5/B14-B10	B5/B14-B10
9.46			B5-B10	B5/B14-B10	B5/B14-B10	B5/B14-B10
11.57			B5-B10	B5/B14-B10	B5/B14-B10	B5/B14-B10
14.63			B5-B10	B5/B14-B10	B5/B14-B10	B5/B14-B10
17.11			B5-B10	B5/B14-B10	B5/B14-B10	B5/B14-B10
20.46			B5-B10	B5/B14-B10	B5/B14-B10	B5/B14-B10
25.03			B5-B10	B5/B14-B10	B5/B14-B10	B5/B14-B10
31.63			B5-B10	B5/B14-B10	B5/B14-B10	B5/B14-B10
35.10			B5-B10	B5/B14-B10	B5/B14-B10	
41.97			B5-B10	B5/B14-B10	B5/B14-B10	
51.34			B5-B10	B5/B14-B10	B5/B14-B10	
64.87			B5-B10	B5/B14-B10	B5/B14-B10	
79.07			B5-B10	B5/B14-B10		

CBA-BA 53

	NEMA		IEC			
i	56C	140TC	063	071	080	090
73.70			B5-B10	B5/B14-B10	B5/B14-B10	B5/B14-B10
93.33			B5-B10	B5/B14-B10	B5/B14-B10	B5/B14-B10
111.61			B5-B10	B5/B14-B10	B5/B14-B10	B5/B14-B10
136.53			B5-B10	B5/B14-B10	B5/B14-B10	B5/B14-B10
172.53			B5-B10	B5/B14-B10	B5/B14-B10	B5/B14-B10
197.11			B5-B10	B5/B14-B10		
249.08			B5-B10	B5/B14-B10		
271.16			B5-B10	B5/B14-B10		
342.65			B5-B10	B5/B14-B10		

NEMA reducers available with C-face input only.
B5/B14: Indicates available IEC motor mounts.
B10: Indicates integral IEC motor is available.

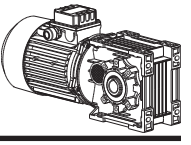

CBA- BA 72

	NEMA			IEC			
i	56C	140TC	180TC	080	090	100	112
8.36					B5/B14-B10	B5/B14-B10	B5/B14-B10
10.06					B5/B14-B10	B5/B14-B10	B5/B14-B10
12.44					B5/B14-B10	B5/B14-B10	B5/B14-B10
14.91					B5/B14-B10	B5/B14-B10	B5/B14-B10
17.94					B5/B14-B10	B5/B14-B10	B5/B14-B10
22.19					B5/B14-B10	B5/B14-B10	B5/B14-B10
27.45				B5/B14-B10	B5/B14-B10	B5/B14-B10	B5/B14-B10
33.04				B5/B14-B10	B5/B14-B10	B5/B14-B10	B5/B14-B10
40.87				B5/B14-B10	B5/B14-B10	B5/B14-B10	B5/B14-B10
45.64				B5/B14-B10	B5/B14-B10		
54.94				B5/B14-B10	B5/B14-B10		
67.96				B5/B14-B10	B5/B14-B10		

CBA- BA 73

	NEMA		IEC			
i	56C	140TC	063	071	080	090
43.89			B5-B10	B5/B14-B10	B5/B14-B10	B5/B14-B10
52.83			B5-B10	B5/B14-B10	B5/B14-B10	B5/B14-B10
65.35			B5-B10	B5/B14-B10	B5/B14-B10	B5/B14-B10
80.83			B5-B10	B5/B14-B10	B5/B14-B10	B5/B14-B10
97.29			B5-B10	B5/B14-B10	B5/B14-B10	B5/B14-B10
120.34			B5-B10	B5/B14-B10	B5/B14-B10	B5/B14-B10
149.73			B5-B10	B5/B14-B10	B5/B14-B10	B5/B14-B10
180.23			B5-B10	B5/B14-B10	B5/B14-B10	B5/B14-B10
222.93			B5-B10	B5/B14-B10	B5/B14-B10	B5/B14-B10
260.20			B5-B10	B5/B14-B10		
321.85			B5-B10	B5/B14-B10		
357.95			B5-B10	B5/B14-B10		
442.76			B5-B10	B5/B14-B10		

NEMA reducers available with C-face input only.
B5/B14: Indicates available IEC motor mounts.
B10: Indicates integral IEC motor is available.

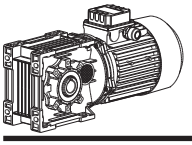

MOTOVARIO™

BA Gear Reducer Ratings – Input Speed 1750 RPM

Maximum Torque in lbs	Output Speed RPM	Exact Ratio i	Maximum Power HP	OHL Output Shaft lbs.	OHL Input Shaft lbs.	Gear Reducer Motorized Input	Gear Reducer Shaft Input
885	230	7.62	3.4	270	84	**BA42**	**IBA42**
885	165	10.62	2.4	302	80	**BA42**	**IBA42**
885	135	12.95	2.0	323	91	**BA42**	**IBA42**
885	121	14.46	1.8	335	100	**BA42**	**IBA42**
1062	106	16.47	1.9	350	117	**BA42**	**IBA42**
1062	76	22.97	1.4	391	80	**BA42**	**IBA42**
1062	63	28.00	1.1	417	91	**BA42**	**IBA42**
1062	56	31.27	1.0	433	100	**BA42**	**IBA42**
1062	52	33.78	0.9	444	103	**BA42**	**IBA42**
1062	37	47.12	0.7	496	80	**BA42**	**IBA42**
1062	30	57.43	0.5	530	91	**BA42**	**IBA42**
973	27	64.13	0.4	550	91	**BA42**	**IBA42**
973	22	78.17	0.4	584	91	**BA42**	**IBA42**
1593	221	7.91	5.9	320	84	**BA52**	**IBA52**
1593	185	9.46	4.9	340	93	**BA52**	**IBA52**
1593	151	11.57	4.0	364	91	**BA52**	**IBA52**
1593	120	14.63	3.2	393	88	**BA52**	**IBA52**
1858	102	17.11	3.2	414	111	**BA52**	**IBA52**
1858	86	20.46	2.7	440	93	**BA52**	**IBA52**
1858	70	25.03	2.2	470	91	**BA52**	**IBA52**
1770	55	31.63	1.6	508	84	**BA52**	**IBA52**
1681	50	35.10	1.4	526	95	**BA52**	**IBA52**
1770	42	41.97	1.2	559	98	**BA52**	**IBA52**
1947	34	51.34	1.1	597	100	**BA52**	**IBA52**
1770	27	64.87	0.8	646	80	**BA52**	**IBA52**
1770	22	79.07	0.7	674	91	**BA52**	**IBA52**
1947	24	73.70	0.8	674	106	**BA53**	**IBA53**
1947	19	93.33	0.6	674	106	**BA53**	**IBA53**
1947	16	111.61	0.5	674	106	**BA53**	**IBA53**
1947	13	136.53	0.4	674	106	**BA53**	**IBA53**
1947	10	172.53	0.3	674	106	**BA53**	**IBA53**
1947	8.9	197.11	0.3	674	106	**BA53**	**IBA53**
1947	7.0	249.08	0.2	674	106	**BA53**	**IBA53**
1947	6.5	271.16	0.2	674	106	**BA53**	**IBA53**
1947	5.1	342.65	0.2	674	106	**BA53**	**IBA53**

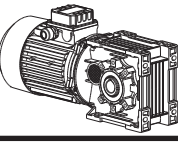

Gear Reducer Ratings – Input Speed 1750 RPM BA

Maximum Torque in lbs	Output Speed RPM	Exact Ratio i	Maximum Power HP	OHL Output Shaft lbs.	OHL Input Shaft lbs.	Gear Reducer Motorized Input	Gear Reducer Shaft Input
3097	209	8.36	10.8	1060	141	**BA72**	**IBA72**
3097	174	10.06	9.0	1127	146	**BA72**	**IBA72**
3097	141	12.44	7.3	1210	142	**BA72**	**IBA72**
3716	117	14.91	7.3	1285	176	**BA72**	**IBA72**
3716	98	17.94	6.1	1367	146	**BA72**	**IBA72**
3716	79	22.19	4.9	1467	142	**BA72**	**IBA72**
3716	64	27.45	4.0	1575	142	**BA72**	**IBA72**
3716	53	33.04	3.3	1675	146	**BA72**	**IBA72**
3539	43	40.87	2.5	1799	135	**BA72**	**IBA72**
3097	38	45.64	2.0	1866	138	**BA72**	**IBA72**
3097	32	54.94	1.6	1985	146	**BA72**	**IBA72**
3097	26	67.96	1.3	2131	142	**BA72**	**IBA72**
3982	40	43.89	2.8	1842	74	**BA73**	**IBA73**
3982	33	52.83	2.3	1959	92	**BA73**	**IBA73**
3982	27	65.35	1.9	2103	90	**BA73**	**IBA73**
3982	22	80.83	1.5	2247	90	**BA73**	**IBA73**
3982	18	97.29	1.3	2247	92	**BA73**	**IBA73**
3982	15	120.34	1.0	2247	90	**BA73**	**IBA73**
3982	12	149.73	0.8	2247	89	**BA73**	**IBA73**
3982	9.7	180.23	0.7	2247	92	**BA73**	**IBA73**
3982	7.9	222.93	0.6	2247	90	**BA73**	**IBA73**
3982	6.7	260.20	0.5	2247	95	**BA73**	**IBA73**
3982	5.4	321.85	0.4	2247	90	**BA73**	**IBA73**
3982	4.9	357.95	0.3	2247	100	**BA73**	**IBA73**
3982	4.0	442.76	0.3	2247	90	**BA73**	**IBA73**

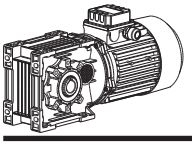

MOTOVARIO™

BA Gear Reducer Ratings – Input Speed 1140 RPM

Maximum Torque in lbs	Output Speed RPM	Exact Ratio i	Maximum Power HP	OHL Output Shaft lbs.	OHL Input Shaft lbs.	Gear Reducer Motorized Input	Gear Reducer Shaft Input
885	150	7.62	2.2	312	84	**BA42**	**IBA42**
885	107	10.62	1.6	348	80	**BA42**	**IBA42**
885	88	12.95	1.3	372	91	**BA42**	**IBA42**
885	79	14.46	1.2	386	100	**BA42**	**IBA42**
1062	69	16.47	1.2	403	117	**BA42**	**IBA42**
1062	50	22.97	0.9	451	80	**BA42**	**IBA42**
1062	41	28.00	0.7	481	91	**BA42**	**IBA42**
1062	36	31.27	0.6	499	100	**BA42**	**IBA42**
1062	34	33.78	0.6	512	103	**BA42**	**IBA42**
1062	24	47.12	0.4	573	80	**BA42**	**IBA42**
1062	20	57.43	0.4	584	91	**BA42**	**IBA42**
973	18	64.13	0.3	584	91	**BA42**	**IBA42**
973	15	78.17	0.2	584	91	**BA42**	**IBA42**
1593	144	7.91	3.8	370	84	**BA52**	**IBA52**
1593	120	9.46	3.2	392	93	**BA52**	**IBA52**
1593	98	11.57	2.6	420	91	**BA52**	**IBA52**
1593	78	14.63	2.1	454	88	**BA52**	**IBA52**
1858	67	17.11	2.1	478	111	**BA52**	**IBA52**
1858	56	20.46	1.7	507	93	**BA52**	**IBA52**
1858	46	25.03	1.4	542	91	**BA52**	**IBA52**
1770	36	31.63	1.1	586	84	**BA52**	**IBA52**
1681	32	35.10	0.9	607	95	**BA52**	**IBA52**
1770	27	41.97	0.8	644	98	**BA52**	**IBA52**
1947	22	51.34	0.7	674	100	**BA52**	**IBA52**
1770	18	64.87	0.5	674	80	**BA52**	**IBA52**
1770	14	79.07	0.4	674	91	**BA52**	**IBA52**
1947	15	73.70	0.5	674	106	**BA53**	**IBA53**
1947	12	93.33	0.4	674	106	**BA53**	**IBA53**
1947	10	111.61	0.4	674	106	**BA53**	**IBA53**
1947	8.3	136.53	0.3	674	106	**BA53**	**IBA53**
1947	6.6	172.53	0.2	674	106	**BA53**	**IBA53**
1947	5.8	197.11	0.2	674	106	**BA53**	**IBA53**
1947	4.6	249.08	0.2	674	106	**BA53**	**IBA53**
1947	4.2	271.16	0.1	674	106	**BA53**	**IBA53**
1947	3.3	342.65	0.1	674	106	**BA53**	**IBA53**

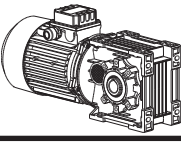

Gear Reducer Ratings – Input Speed 1140 RPM BA

Maximum Torque in lbs	Output Speed RPM	Exact Ratio i	Maximum Power HP	OHL Output Shaft lbs.	OHL Input Shaft lbs.	Gear Reducer Motorized Input	Gear Reducer Shaft Input
3097	136	8.36	7.1	1222	141	**BA72**	**IBA72**
3097	113	10.06	5.9	1300	146	**BA72**	**IBA72**
3097	92	12.44	4.7	1396	142	**BA72**	**IBA72**
3716	76	14.91	4.7	1482	176	**BA72**	**IBA72**
3716	64	17.94	3.9	1577	146	**BA72**	**IBA72**
3716	51	22.19	3.2	1693	142	**BA72**	**IBA72**
3716	42	27.45	2.6	1817	142	**BA72**	**IBA72**
3716	35	33.04	2.1	1933	146	**BA72**	**IBA72**
3539	28	40.87	1.6	2075	135	**BA72**	**IBA72**
3097	25	45.64	1.3	2153	138	**BA72**	**IBA72**
3097	21	54.94	1.1	2247	146	**BA72**	**IBA72**
3097	17	67.96	0.9	2247	142	**BA72**	**IBA72**
3982	26	43.89	1.8	2125	74	**BA73**	**IBA73**
3982	22	52.83	1.5	2247	92	**BA73**	**IBA73**
3982	17	65.35	1.2	2247	90	**BA73**	**IBA73**
3982	14	80.83	1.0	2247	90	**BA73**	**IBA73**
3982	12	97.29	0.8	2247	92	**BA73**	**IBA73**
3982	9.5	120.34	0.7	2247	90	**BA73**	**IBA73**
3982	7.6	149.73	0.5	2247	89	**BA73**	**IBA73**
3982	6.3	180.23	0.4	2247	92	**BA73**	**IBA73**
3982	5.1	222.93	0.4	2247	90	**BA73**	**IBA73**
3982	4.4	260.20	0.3	2247	95	**BA73**	**IBA73**
3982	3.5	321.85	0.2	2247	90	**BA73**	**IBA73**
3982	3.2	357.95	0.2	2247	100	**BA73**	**IBA73**
3982	2.6	442.76	0.2	2247	90	**BA73**	**IBA73**

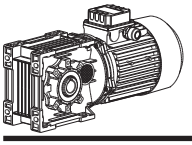

MOTOVARIO™

BA Gear Reducer Ratings – Input Speed 875 RPM

Maximum Torque in lbs	Output Speed RPM	Exact Ratio i	Maximum Power HP	OHL Output Shaft lbs.	OHL Input Shaft lbs.	Gear Reducer Motorized Input	Gear Reducer Shaft Input
885	115	7.62	1.7	341	84	**BA42**	**IBA42**
885	82	10.62	1.2	381	80	**BA42**	**IBA42**
885	68	12.95	1.0	407	91	**BA42**	**IBA42**
885	61	14.46	0.9	422	100	**BA42**	**IBA42**
1062	53	16.47	0.9	440	117	**BA42**	**IBA42**
1062	38	22.97	0.7	492	80	**BA42**	**IBA42**
1062	31	28.00	0.6	526	91	**BA42**	**IBA42**
1062	28	31.27	0.5	545	100	**BA42**	**IBA42**
1062	26	33.78	0.5	560	103	**BA42**	**IBA42**
1062	19	47.12	0.3	584	80	**BA42**	**IBA42**
1062	15	57.43	0.3	584	91	**BA42**	**IBA42**
973	14	64.13	0.2	584	91	**BA42**	**IBA42**
973	11	78.17	0.2	584	91	**BA42**	**IBA42**
1593	111	7.91	2.9	404	84	**BA52**	**IBA52**
1593	92	9.46	2.5	428	93	**BA52**	**IBA52**
1593	76	11.57	2.0	458	91	**BA52**	**IBA52**
1593	60	14.63	1.6	495	88	**BA52**	**IBA52**
1858	51	17.11	1.6	522	111	**BA52**	**IBA52**
1858	43	20.46	1.3	554	93	**BA52**	**IBA52**
1858	35	25.03	1.1	593	91	**BA52**	**IBA52**
1770	28	31.63	0.8	641	84	**BA52**	**IBA52**
1681	25	35.10	0.7	663	95	**BA52**	**IBA52**
1770	21	41.97	0.6	674	98	**BA52**	**IBA52**
1947	17	51.34	0.6	674	100	**BA52**	**IBA52**
1770	13	64.87	0.4	674	80	**BA52**	**IBA52**
1770	11	79.07	0.3	674	91	**BA52**	**IBA52**
1947	12	73.70	0.4	674	106	**BA53**	**IBA53**
1947	9.4	93.33	0.3	674	106	**BA53**	**IBA53**
1947	7.8	111.61	0.3	674	106	**BA53**	**IBA53**
1947	6.4	136.53	0.2	674	106	**BA53**	**IBA53**
1947	5.1	172.53	0.2	674	106	**BA53**	**IBA53**
1947	4.4	197.11	0.2	674	106	**BA53**	**IBA53**
1947	3.5	249.08	0.1	674	106	**BA53**	**IBA53**
1947	3.2	271.16	0.1	674	106	**BA53**	**IBA53**
1947	2.6	342.65	0.1	674	106	**BA53**	**IBA53**

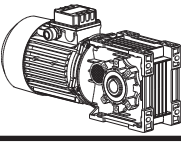

Gear Reducer Ratings – Input Speed 875 RPM BA

Maximum Torque in lbs	Output Speed RPM	Exact Ratio i	Maximum Power HP	OHL Output Shaft lbs.	OHL Input Shaft lbs.	Gear Reducer Motorized Input	Gear Reducer Shaft Input
3097	105	8.36	5.4	1335	141	**BA72**	**IBA72**
3097	87	10.06	4.5	1420	146	**BA72**	**IBA72**
3097	70	12.44	3.6	1524	142	**BA72**	**IBA72**
3716	59	14.91	3.6	1619	176	**BA72**	**IBA72**
3716	49	17.94	3.0	1722	146	**BA72**	**IBA72**
3716	39	22.19	2.4	1849	142	**BA72**	**IBA72**
3716	32	27.45	2.0	1984	142	**BA72**	**IBA72**
3716	26	33.04	1.6	2111	146	**BA72**	**IBA72**
3539	21	40.87	1.3	2247	135	**BA72**	**IBA72**
3097	19	45.64	1.0	2247	138	**BA72**	**IBA72**
3097	16	54.94	0.8	2247	146	**BA72**	**IBA72**
3097	13	67.96	0.7	2247	142	**BA72**	**IBA72**
3982	20	43.89	1.4	2247	74	**BA73**	**IBA73**
3982	17	52.83	1.2	2247	92	**BA73**	**IBA73**
3982	13	65.35	0.9	2247	90	**BA73**	**IBA73**
3982	11	80.83	0.8	2247	90	**BA73**	**IBA73**
3982	9.0	97.29	0.6	2247	92	**BA73**	**IBA73**
3982	7.3	120.34	0.5	2247	90	**BA73**	**IBA73**
3982	5.8	149.73	0.4	2247	89	**BA73**	**IBA73**
3982	4.9	180.23	0.3	2247	92	**BA73**	**IBA73**
3982	3.9	222.93	0.3	2247	90	**BA73**	**IBA73**
3982	3.4	260.20	0.2	2247	95	**BA73**	**IBA73**
3982	2.7	321.85	0.2	2247	90	**BA73**	**IBA73**
3982	2.4	357.95	0.2	2247	100	**BA73**	**IBA73**
3982	2.0	442.76	0.1	2247	90	**BA73**	**IBA73**

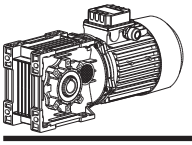

MOTOVARIO™

BA Gearmotor Ratings – Motor Speed 1750 RPM

Input Power HP	Output Speed RPM	Service Factor sf	Output Torque in lbs.	Exact Ratio i	Maximum Torque in lbs.	OHL Output Shaft lbs.	Gearmotor Reducer	Gearmotor Motor	Gear Reducer Reducer	Gear Reducer NEMA C-face
0.16	230	21.2	42	7.62	885	270	**CBA42**	63A4	**BA42**	56C
	221	36.8	43	7.91	1593	320	**CBA52**	63A4	**BA52**	56C
	185	30.8	52	9.46	1593	340	**CBA52**	63A4	**BA52**	56C
	165	15.2	58	10.62	885	302	**CBA42**	63A4	**BA42**	56C
	151	25.1	63	11.57	1593	364	**CBA52**	63A4	**BA52**	56C
	135	12.5	71	12.95	885	323	**CBA42**	63A4	**BA42**	56C
	121	11.2	79	14.46	885	335	**CBA42**	63A4	**BA42**	56C
	120	19.9	80	14.63	1593	393	**CBA52**	63A4	**BA52**	56C
	106	11.8	90	16.47	1062	350	**CBA42**	63A4	**BA42**	56C
	102	19.8	94	17.11	1858	414	**CBA52**	63A4	**BA52**	56C
	86	16.6	112	20.46	1858	440	**CBA52**	63A4	**BA52**	56C
	76	8.4	126	22.97	1062	391	**CBA42**	63A4	**BA42**	56C
	70	13.6	137	25.03	1858	470	**CBA52**	63A4	**BA52**	56C
	63	6.9	153	28.00	1062	417	**CBA42**	63A4	**BA42**	56C
	56	6.2	171	31.27	1062	433	**CBA42**	63A4	**BA42**	56C
	55	10.2	173	31.63	1770	508	**CBA52**	63A4	**BA52**	56C
	52	5.7	185	33.78	1062	444	**CBA42**	63A4	**BA42**	56C
	50	8.8	192	35.10	1681	526	**CBA52**	63A4	**BA52**	56C
	42	7.7	230	41.97	1770	559	**CBA52**	63A4	**BA52**	56C
	37	4.1	258	47.12	1062	496	**CBA42**	63A4	**BA42**	56C
	34	6.9	281	51.34	1947	597	**CBA52**	63A4	**BA52**	56C
	30	3.4	314	57.43	1062	530	**CBA42**	63A4	**BA42**	56C
	27	2.8	351	64.13	973	550	**CBA42**	63A4	**BA42**	56C
	27	5.0	355	64.87	1770	646	**CBA52**	63A4	**BA52**	56C
	24	5.1	382	73.70	1947	674	**CBA53**	63A4	**BA53**	56C
	22	2.3	428	78.17	973	584	**CBA42**	63A4	**BA42**	56C
	22	4.1	433	79.07	1770	674	**CBA52**	63A4	**BA52**	56C
	19	4.0	484	93.33	1947	674	**CBA53**	63A4	**BA53**	56C
	16	3.4	579	111.61	1947	674	**CBA53**	63A4	**BA53**	56C
	13	2.7	708	136.53	1947	674	**CBA53**	63A4	**BA53**	56C
	12	5.1	776	149.73	3982	2247	**CBA73**	63A4	**BA73**	56C
	10	2.2	895	172.53	1947	674	**CBA53**	63A4	**BA53**	56C
	9.7	4.3	934	180.23	3982	2247	**CBA73**	63A4	**BA73**	56C
	8.9	1.9	1022	197.11	1947	674	**CBA53**	63A4	**BA53**	56C
	7.9	3.4	1156	222.93	3982	2247	**CBA73**	63A4	**BA73**	56C
	7.0	1.5	1291	249.08	1947	674	**CBA53**	63A4	**BA53**	56C
	6.7	3.0	1349	260.20	3982	2247	**CBA73**	63A4	**BA73**	56C
	5.4	2.4	1669	321.85	3982	2247	**CBA73**	63A4	**BA73**	56C
	4.9	2.1	1856	357.95	3982	2247	**CBA73**	63A4	**BA73**	56C
	4.0	1.7	2296	442.76	3982	2247	**CBA73**	63A4	**BA73**	56C
0.25	230	13.6	65	7.62	885	270	**CBA42**	63B4	**BA42**	56C
	221	23.5	68	7.91	1593	320	**CBA52**	63B4	**BA52**	56C
	185	19.7	81	9.46	1593	340	**CBA52**	63B4	**BA52**	56C
	165	9.7	91	10.62	885	302	**CBA42**	63B4	**BA42**	56C

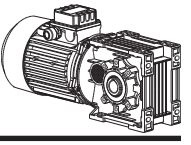

Gearmotor Ratings – Motor Speed 1750 RPM BA

Input Power HP	Output Speed RPM	Service Factor sf	Output Torque in lbs.	Exact Ratio i	Maximum Torque in lbs.	OHL Output Shaft lbs.	Gearmotor Reducer	Gearmotor Motor	Gear Reducer Reducer	Gear Reducer NEMA C-face
0.25	151	16.1	99	11.57	1593	364	**CBA52**	63B4	**BA52**	56C
	135	8.0	111	12.95	885	323	**CBA42**	63B4	**BA42**	56C
	121	7.2	124	14.46	885	335	**CBA42**	63B4	**BA42**	56C
	120	12.7	125	14.63	1593	393	**CBA52**	63B4	**BA52**	56C
	106	7.5	141	16.47	1062	350	**CBA42**	63B4	**BA42**	56C
	102	12.7	146	17.11	1858	414	**CBA52**	63B4	**BA52**	56C
	86	10.6	175	20.46	1858	440	**CBA52**	63B4	**BA52**	56C
	76	5.4	196	22.97	1062	391	**CBA42**	63B4	**BA42**	56C
	70	8.7	214	25.03	1858	470	**CBA52**	63B4	**BA52**	56C
	63	4.4	239	28.00	1062	417	**CBA42**	63B4	**BA42**	56C
	56	4.0	267	31.27	1062	433	**CBA42**	63B4	**BA42**	56C
	55	6.5	270	31.63	1770	508	**CBA52**	63B4	**BA52**	56C
	52	3.7	289	33.78	1062	444	**CBA42**	63B4	**BA42**	56C
	50	5.6	300	35.10	1681	526	**CBA52**	63B4	**BA52**	56C
	42	4.9	359	41.97	1770	559	**CBA52**	63B4	**BA52**	56C
	37	2.6	403	47.12	1062	496	**CBA42**	63B4	**BA42**	56C
	34	4.4	439	51.34	1947	597	**CBA52**	63B4	**BA52**	56C
	30	2.2	491	57.43	1062	530	**CBA42**	63B4	**BA42**	56C
	27	1.8	548	64.13	973	550	**CBA42**	63B4	**BA42**	56C
	27	3.2	555	64.87	1770	646	**CBA52**	63B4	**BA52**	56C
	24	3.3	597	73.70	1947	674	**CBA53**	63B4	**BA53**	56C
	22	1.5	668	78.17	973	584	**CBA42**	63B4	**BA42**	56C
	22	2.6	676	79.07	1770	674	**CBA52**	63B4	**BA52**	56C
	19	2.6	756	93.33	1947	674	**CBA53**	63B4	**BA53**	56C
	16	2.2	904	111.61	1947	674	**CBA53**	63B4	**BA53**	56C
	13	1.8	1106	136.53	1947	674	**CBA53**	63B4	**BA53**	56C
	12	3.3	1213	149.73	3982	2247	**CBA73**	63B4	**BA73**	56C
	10	1.4	1398	172.53	1947	674	**CBA53**	63B4	**BA53**	56C
	9.7	2.7	1460	180.23	3982	2247	**CBA73**	63B4	**BA73**	56C
	8.9	1.2	1597	197.11	1947	674	**CBA53**	63B4	**BA53**	56C
	7.9	2.2	1806	222.93	3982	2247	**CBA73**	63B4	**BA73**	56C
	7.0	1.0	2018	249.08	1947	674	**CBA53**	63B4	**BA53**	56C
	6.7	1.9	2108	260.20	3982	2247	**CBA73**	63B4	**BA73**	56C
	5.4	1.5	2607	321.85	3982	2247	**CBA73**	63B4	**BA73**	56C
	4.9	1.4	2900	357.95	3982	2247	**CBA73**	63B4	**BA73**	56C
	4.0	1.1	3587	442.76	3982	2247	**CBA73**	63B4	**BA73**	56C
0.33	230	10.3	86	7.62	885	270	**CBA42**	71A4	**BA42**	56C
	221	17.8	89	7.91	1593	320	**CBA52**	71A4	**BA52**	56C
	185	14.9	107	9.46	1593	340	**CBA52**	71A4	**BA52**	56C
	165	7.4	120	10.62	885	302	**CBA42**	71A4	**BA42**	56C
	151	12.2	131	11.57	1593	364	**CBA52**	71A4	**BA52**	56C
	135	6.1	146	12.95	885	323	**CBA42**	71A4	**BA42**	56C
	121	5.4	163	14.46	885	335	**CBA42**	71A4	**BA42**	56C
	120	9.6	165	14.63	1593	393	**CBA52**	71A4	**BA52**	56C

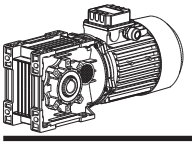

MOTOVARIO™

BA Gearmotor Ratings – Motor Speed 1750 RPM

Input Power HP	Output Speed RPM	Service Factor sf	Output Torque in lbs.	Exact Ratio i	Maximum Torque in lbs.	OHL Output Shaft lbs.	Gearmotor Reducer	Gearmotor Motor	Gear Reducer Reducer	Gear Reducer NEMA C-face
0.33	106	5.7	186	16.47	1062	350	**CBA42**	71A4	**BA42**	56C
	102	9.6	193	17.11	1858	414	**CBA52**	71A4	**BA52**	56C
	86	8.0	231	20.46	1858	440	**CBA52**	71A4	**BA52**	56C
	76	4.1	259	22.97	1062	391	**CBA42**	71A4	**BA42**	56C
	70	6.6	283	25.03	1858	470	**CBA52**	71A4	**BA52**	56C
	63	3.4	316	28.00	1062	417	**CBA42**	71A4	**BA42**	56C
	56	3.0	353	31.27	1062	433	**CBA42**	71A4	**BA42**	56C
	55	5.0	357	31.63	1770	508	**CBA52**	71A4	**BA52**	56C
	52	2.8	381	33.78	1062	444	**CBA42**	71A4	**BA42**	56C
	50	4.2	396	35.10	1681	526	**CBA52**	71A4	**BA52**	56C
	42	3.7	474	41.97	1770	559	**CBA52**	71A4	**BA52**	56C
	37	2.0	532	47.12	1062	496	**CBA42**	71A4	**BA42**	56C
	34	3.4	579	51.34	1947	597	**CBA52**	71A4	**BA52**	56C
	30	1.6	648	57.43	1062	530	**CBA42**	71A4	**BA42**	56C
	27	1.3	724	64.13	973	550	**CBA42**	71A4	**BA42**	56C
	27	2.4	732	64.87	1770	646	**CBA52**	71A4	**BA52**	56C
	26	4.0	767	67.96	3097	2131	-	-	**BA72**	56C
	24	2.5	788	73.70	1947	674	**CBA53**	71A4	**BA53**	56C
	22	1.1	882	78.17	973	584	**CBA42**	71A4	**BA42**	56C
	22	2.0	893	79.07	1770	674	**CBA52**	71A4	**BA52**	56C
	19	2.0	998	93.33	1947	674	**CBA53**	71A4	**BA53**	56C
	18	3.8	1040	97.29	3982	2247	**CBA73**	71A4	**BA73**	56C
	16	1.6	1194	111.61	1947	674	**CBA53**	71A4	**BA53**	56C
	15	3.1	1287	120.34	3982	2247	**CBA73**	71A4	**BA73**	56C
	13	1.3	1460	136.53	1947	674	**CBA53**	71A4	**BA53**	56C
	12	2.5	1601	149.73	3982	2247	**CBA73**	71A4	**BA73**	56C
	10	1.1	1845	172.53	1947	674	**CBA53**	71A4	**BA53**	56C
	9.7	2.1	1927	180.23	3982	2247	**CBA73**	71A4	**BA73**	56C
	7.9	1.7	2384	222.93	3982	2247	**CBA73**	71A4	**BA73**	56C
	6.7	1.4	2783	260.20	3982	2247	**CBA73**	71A4	**BA73**	56C
	5.4	1.2	3442	321.85	3982	2247	**CBA73**	71A4	**BA73**	56C
	4.9	1.0	3828	357.95	3982	2247	**CBA73**	71A4	**BA73**	56C
0.5	230	6.8	130	7.62	885	270	**CBA42**	71B4	**BA42**	56C
	221	11.8	135	7.91	1593	320	**CBA52**	71B4	**BA52**	56C
	185	9.8	162	9.46	1593	340	**CBA52**	71B4	**BA52**	56C
	165	4.9	182	10.62	885	302	**CBA42**	71B4	**BA42**	56C
	151	8.0	198	11.57	1593	364	**CBA52**	71B4	**BA52**	56C
	135	4.0	221	12.95	885	323	**CBA42**	71B4	**BA42**	56C
	121	3.6	247	14.46	885	335	**CBA42**	71B4	**BA42**	56C
	120	6.4	250	14.63	1593	393	**CBA52**	71B4	**BA52**	56C
	106	3.8	282	16.47	1062	350	**CBA42**	71B4	**BA42**	56C
	102	6.3	293	17.11	1858	414	**CBA52**	71B4	**BA52**	56C
	86	5.3	350	20.46	1858	440	**CBA52**	71B4	**BA52**	56C
	76	2.7	393	22.97	1062	391	**CBA42**	71B4	**BA42**	56C

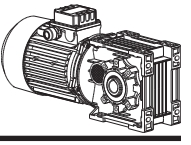

Gearmotor Ratings – Motor Speed 1750 RPM BA

Input Power HP	Output Speed RPM	Service Factor sf	Output Torque in lbs.	Exact Ratio i	Maximum Torque in lbs.	OHL Output Shaft lbs.	Gearmotor Reducer	Gearmotor Motor	Gear Reducer Reducer	Gear Reducer NEMA C-face
0.5	70	4.3	428	25.03	1858	470	**CBA52**	71B4	**BA52**	56C
	63	2.2	479	28.00	1062	417	**CBA42**	71B4	**BA42**	56C
	56	2.0	535	31.27	1062	433	**CBA42**	71B4	**BA42**	56C
	55	3.3	541	31.63	1770	508	**CBA52**	71B4	**BA52**	56C
	52	1.8	578	33.78	1062	444	**CBA42**	71B4	**BA42**	56C
	50	2.8	600	35.10	1681	526	**CBA52**	71B4	**BA52**	56C
	42	2.5	718	41.97	1770	559	**CBA52**	71B4	**BA52**	56C
	38	4.0	781	45.64	3097	1866	-	-	**BA72**	56C
	37	1.3	806	47.12	1062	496	**CBA42**	71B4	**BA42**	56C
	34	2.2	878	51.34	1947	597	**CBA52**	71B4	**BA52**	56C
	32	3.3	940	54.94	3097	1985	-	-	**BA72**	56C
	30	1.1	982	57.43	1062	530	**CBA42**	71B4	**BA42**	56C
	27	1.6	1110	64.87	1770	646	**CBA52**	71B4	**BA52**	56C
	27	3.8	1059	65.35	3982	2103	**CBA73**	71B4	**BA73**	56C
	26	2.7	1162	67.96	3097	2131	-	-	**BA72**	56C
	24	1.6	1194	73.70	1947	674	**CBA53**	71B4	**BA53**	56C
	22	1.3	1352	79.07	1770	674	**CBA52**	71B4	**BA52**	56C
	22	3.0	1310	80.83	3982	2247	**CBA73**	71B4	**BA73**	56C
	19	1.3	1512	93.33	1947	674	**CBA53**	71B4	**BA53**	56C
	18	2.5	1576	97.29	3982	2247	**CBA73**	71B4	**BA73**	56C
	16	1.1	1808	111.61	1947	674	**CBA53**	71B4	**BA53**	56C
	15	2.0	1950	120.34	3982	2247	**CBA73**	71B4	**BA73**	56C
	12	1.6	2426	149.73	3982	2247	**CBA73**	71B4	**BA73**	56C
	9.7	1.4	2920	180.23	3982	2247	**CBA73**	71B4	**BA73**	56C
	7.9	1.1	3612	222.93	3982	2247	**CBA73**	71B4	**BA73**	56C
	6.7	1.0	4216	260.20	3982	2247	**CBA73**	71B4	**BA73**	56C
0.75	230	4.5	195	7.62	885	270	**CBA42**	80A4	**BA42**	56C
	221	7.8	203	7.91	1593	320	**CBA52**	80A4	**BA52**	56C
	185	6.6	243	9.46	1593	340	**CBA52**	80A4	**BA52**	56C
	165	3.2	273	10.62	885	302	**CBA42**	80A4	**BA42**	56C
	151	5.4	297	11.57	1593	364	**CBA52**	80A4	**BA52**	56C
	135	2.7	332	12.95	885	323	**CBA42**	80A4	**BA42**	56C
	121	2.4	371	14.46	885	335	**CBA42**	80A4	**BA42**	56C
	120	4.2	375	14.63	1593	393	**CBA52**	80A4	**BA52**	56C
	106	2.5	423	16.47	1062	350	**CBA42**	80A4	**BA42**	56C
	102	4.2	439	17.11	1858	414	**CBA52**	80A4	**BA52**	56C
	86	3.5	525	20.46	1858	440	**CBA52**	80A4	**BA52**	56C
	76	1.8	589	22.97	1062	391	**CBA42**	80A4	**BA42**	56C
	70	2.9	642	25.03	1858	470	**CBA52**	80A4	**BA52**	56C
	63	1.5	718	28.00	1062	417	**CBA42**	80A4	**BA42**	56C
	56	1.3	802	31.27	1062	433	**CBA42**	80A4	**BA42**	56C
	55	2.2	811	31.63	1770	508	**CBA52**	80A4	**BA52**	56C
	52	1.2	867	33.78	1062	444	**CBA42**	80A4	**BA42**	56C
	50	1.9	900	35.10	1681	526	**CBA52**	80A4	**BA52**	56C
	43	3.4	1048	40.87	3539	1799	**CBA72**	80A4	**BA72**	56C

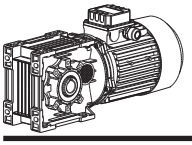

MOTOVARIO™

BA Gearmotor Ratings – Motor Speed 1750 RPM

Input Power HP	Output Speed RPM	Service Factor sf	Output Torque in lbs.	Exact Ratio i	Maximum Torque in lbs.	OHL Output Shaft lbs.	Gearmotor Reducer	Gearmotor Motor	Gear Reducer Reducer	Gear Reducer NEMA C-face
0.75	42	1.6	1077	41.97	1770	559	**CBA52**	80A4	**BA52**	56C
	40	3.7	1067	43.89	3982	1842	**CBA73**	80A4	**BA73**	56C
	38	2.6	1171	45.64	3097	1866	**CBA72**	80A4	**BA72**	56C
	34	1.5	1317	51.34	1947	597	**CBA52**	80A4	**BA52**	56C
	33	3.1	1284	52.83	3982	1959	**CBA73**	80A4	**BA73**	56C
	32	2.2	1409	54.94	3097	1985	**CBA72**	80A4	**BA72**	56C
	27	1.1	1664	64.87	1770	646	**CBA52**	80A4	**BA52**	56C
	27	2.5	1588	65.35	3982	2103	**CBA73**	80A4	**BA73**	56C
	26	1.8	1743	67.96	3097	2131	**CBA72**	80A4	**BA72**	56C
	24	1.1	1791	73.70	1947	674	**CBA53**	80A4	**BA53**	56C
	22	2.0	1964	80.83	3982	2247	**CBA73**	80A4	**BA73**	56C
	18	1.7	2365	97.29	3982	2247	**CBA73**	80A4	**BA73**	56C
	15	1.4	2925	120.34	3982	2247	**CBA73**	80A4	**BA73**	56C
	12	1.1	3639	149.73	3982	2247	**CBA73**	80A4	**BA73**	56C
1.0	230	3.4	261	7.62	885	270	**CBA42**	80B4	**BA42**	56C/143/145TC
	221	5.9	271	7.91	1593	320	**CBA52**	80B4	**BA52**	56C/143/145TC
	185	4.9	324	9.46	1593	340	**CBA52**	80B4	**BA52**	56C/143/145TC
	165	2.4	363	10.62	885	302	**CBA42**	80B4	**BA42**	56C/143/145TC
	151	4.0	396	11.57	1593	364	**CBA52**	80B4	**BA52**	56C/143/145TC
	135	2.0	443	12.95	885	323	**CBA42**	80B4	**BA42**	56C/143/145TC
	121	1.8	495	14.46	885	335	**CBA42**	80B4	**BA42**	56C/143/145TC
	120	3.2	500	14.63	1593	393	**CBA52**	80B4	**BA52**	56C/143/145TC
	106	1.9	563	16.47	1062	350	**CBA42**	80B4	**BA42**	56C/143/145TC
	102	3.2	585	17.11	1858	414	**CBA52**	80B4	**BA52**	56C/143/145TC
	86	2.7	700	20.46	1858	440	**CBA52**	80B4	**BA52**	56C/143/145TC
	76	1.4	786	22.97	1062	391	**CBA42**	80B4	**BA42**	56C/143/145TC
	70	2.2	856	25.03	1858	470	**CBA52**	80B4	**BA52**	56C/143/145TC
	64	4.0	939	27.45	3716	1575	**CBA72**	80B4	**BA72**	56C/143/145TC
	63	1.1	958	28.00	1062	417	**CBA42**	80B4	**BA42**	56C/143/145TC
	56	1.0	1070	31.27	1062	433	**CBA42**	80B4	**BA42**	56C/143/145TC
	55	1.6	1082	31.63	1770	508	**CBA52**	80B4	**BA52**	56C/143/145TC
	53	3.3	1130	33.04	3716	1675	**CBA72**	80B4	**BA72**	56C/143/145TC
	50	1.4	1200	35.10	1681	526	**CBA52**	80B4	**BA52**	56C/143/145TC
	43	2.5	1398	40.87	3539	1799	**CBA72**	80B4	**BA72**	56C/143/145TC
	42	1.2	1436	41.97	1770	559	**CBA52**	80B4	**BA52**	56C/143/145TC
	40	2.8	1422	43.89	3982	1842	**CBA73**	80B4	**BA73**	56C/143/145TC
	38	2.0	1561	45.64	3097	1866	**CBA72**	80B4	**BA72**	56C/143/145TC
	34	1.1	1756	51.34	1947	597	**CBA52**	80B4	**BA52**	56C/143/145TC
	33	2.3	1712	52.83	3982	1959	**CBA73**	80B4	**BA73**	56C/143/145TC
	32	1.6	1879	54.94	3097	1985	**CBA72**	80B4	**BA72**	56C/143/145TC
	27	1.9	2118	65.35	3982	2103	**CBA73**	80B4	**BA73**	56C/143/145TC
	26	1.3	2325	67.96	3097	2131	**CBA72**	80B4	**BA72**	56C/143/145TC
	22	1.5	2619	80.83	3982	2247	**CBA73**	80B4	**BA73**	56C/143/145TC
	18	1.3	3153	97.29	3982	2247	**CBA73**	80B4	**BA73**	56C/143/145TC
	15	1.0	3900	120.34	3982	2247	**CBA73**	80B4	**BA73**	56C/143/145TC

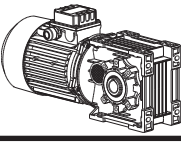

Gearmotor Ratings – Motor Speed 1750 RPM BA

Input Power HP	Output Speed RPM	Service Factor sf	Output Torque in lbs.	Exact Ratio i	Maximum Torque in lbs.	OHL Output Shaft lbs.	Gearmotor Reducer	Gearmotor Motor	Gear Reducer Reducer	Gear Reducer NEMA C-face
1.5	230	2.3	391	7.62	885	270	-	-	**BA42**	56C/143/145TC
	221	3.9	406	7.91	1593	320	**CBA52**	90S4	**BA52**	56C/143/145TC
	185	3.3	485	9.46	1593	340	**CBA52**	90S4	**BA52**	56C/143/145TC
	165	1.6	545	10.62	885	302	-	-	**BA42**	56C/143/145TC
	151	2.7	594	11.57	1593	364	**CBA52**	90S4	**BA52**	56C/143/145TC
	135	1.3	664	12.95	885	323	-	-	**BA42**	56C/143/145TC
	121	1.2	742	14.46	885	335	-	-	**BA42**	56C/143/145TC
	120	2.1	750	14.63	1593	393	**CBA52**	90S4	**BA52**	56C/143/145TC
	106	1.3	845	16.47	1062	350	-	-	**BA42**	56C/143/145TC
	102	2.1	878	17.11	1858	414	**CBA52**	90S4	**BA52**	56C/143/145TC
	98	4.0	921	17.94	3716	1367	**CBA72**	90S4	**BA72**	56C/143/145TC
	86	1.8	1050	20.46	1858	440	**CBA52**	90S4	**BA52**	56C/143/145TC
	79	3.3	1139	22.19	3716	1467	**CBA72**	90S4	**BA72**	56C/143/145TC
	70	1.4	1284	25.03	1858	470	**CBA52**	90S4	**BA52**	56C/143/145TC
	64	2.6	1408	27.45	3716	1575	**CBA72**	90S4	**BA72**	56C/143/145TC
	55	1.1	1623	31.63	1770	508	**CBA52**	90S4	**BA52**	56C/143/145TC
	53	2.2	1695	33.04	3716	1675	**CBA72**	90S4	**BA72**	56C/143/145TC
	43	1.7	2097	40.87	3539	1799	**CBA72**	90S4	**BA72**	56C/143/145TC
	40	1.9	2133	43.89	3982	1842	**CBA73**	90S4	**BA73**	56C/143/145TC
	38	1.3	2342	45.64	3097	1866	**CBA72**	90S4	**BA72**	56C/143/145TC
	33	1.6	2568	52.83	3982	1959	**CBA73**	90S4	**BA73**	56C/143/145TC
	32	1.1	2819	54.94	3097	1985	**CBA72**	90S4	**BA72**	56C/143/145TC
	27	1.3	3176	65.35	3982	2103	**CBA73**	90S4	**BA73**	56C/143/145TC
	22	1.0	3929	80.83	3982	2247	**CBA73**	90S4	**BA73**	56C/143/145TC
2.0	230	1.7	521	7.62	885	270	-	-	**BA42**	143/145TC
	221	2.9	541	7.91	1593	320	**CBA52**	90L4	**BA52**	143/145TC
	185	2.5	647	9.46	1593	340	**CBA52**	90L4	**BA52**	143/145TC
	165	1.2	727	10.62	885	302	-	-	**BA42**	143/145TC
	151	2.0	792	11.57	1593	364	**CBA52**	90L4	**BA52**	143/145TC
	141	3.6	851	12.44	3097	1210	**CBA72**	90L4	**BA72**	143/145TC
	135	1.0	886	12.95	885	323	-	-	**BA42**	143/145TC
	120	1.6	1001	14.63	1593	393	**CBA52**	90L4	**BA52**	143/145TC
	117	3.6	1020	14.91	3716	1285	**CBA72**	90L4	**BA72**	143/145TC
	102	1.6	1171	17.11	1858	414	**CBA52**	90L4	**BA52**	143/145TC
	98	3.0	1227	17.94	3716	1367	**CBA72**	90L4	**BA72**	143/145TC
	86	1.3	1400	20.46	1858	440	**CBA52**	90L4	**BA52**	143/145TC
	79	2.4	1518	22.19	3716	1467	**CBA72**	90L4	**BA72**	143/145TC
	70	1.1	1712	25.03	1858	470	**CBA52**	90L4	**BA52**	143/145TC
	64	2.0	1878	27.45	3716	1575	**CBA72**	90L4	**BA72**	143/145TC
	53	1.6	2260	33.04	3716	1675	**CBA72**	90L4	**BA72**	143/145TC
	43	1.3	2796	40.87	3539	1799	**CBA72**	90L4	**BA72**	143/145TC
	40	1.4	2845	43.89	3982	1842	**CBA73**	90L4	**BA73**	143/145TC
	38	1.0	3123	45.64	3097	1866	**CBA72**	90L4	**BA72**	143/145TC
	33	1.2	3424	52.83	3982	1959	**CBA73**	90L4	**BA73**	143/145TC

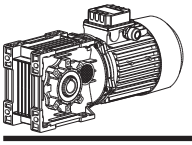

MOTOVARIO™

BA Gearmotor Ratings – Motor Speed 1750 RPM

Input Power HP	Output Speed RPM	Service Factor sf	Output Torque in lbs.	Exact Ratio i	Maximum Torque in lbs.	OHL Output Shaft lbs.	Gearmotor Reducer	Gearmotor Motor	Gear Reducer Reducer	Gear Reducer NEMA C-face
3.0	209	3.6	858	8.36	3097	1060	**CBA72**	100LA4	**BA72**	182/184TC
	174	3.0	1032	10.06	3097	1127	**CBA72**	100LA4	**BA72**	182/184TC
	141	2.4	1277	12.44	3097	1210	**CBA72**	100LA4	**BA72**	182/184TC
	117	2.4	1530	14.91	3716	1285	**CBA72**	100LA4	**BA72**	182/184TC
	98	2.0	1841	17.94	3716	1367	**CBA72**	100LA4	**BA72**	182/184TC
	79	1.6	2277	22.19	3716	1467	**CBA72**	100LA4	**BA72**	182/184TC
	64	1.3	2817	27.45	3716	1575	**CBA72**	100LA4	**BA72**	182/184TC
	53	1.1	3391	33.04	3716	1675	**CBA72**	100LA4	**BA72**	182/184TC
5.0	209	2.2	1429	8.36	3097	1060	**CBA72**	112M4	**BA72**	182/184TC
	174	1.8	1720	10.06	3097	1127	**CBA72**	112M4	**BA72**	182/184TC
	141	1.5	2128	12.44	3097	1210	**CBA72**	112M4	**BA72**	182/184TC
	117	1.5	2549	14.91	3716	1285	**CBA72**	112M4	**BA72**	182/184TC
	98	1.2	3069	17.94	3716	1367	**CBA72**	112M4	**BA72**	182/184TC
	79	1.0	3796	22.19	3716	1467	**CBA72**	112M4	**BA72**	182/184TC

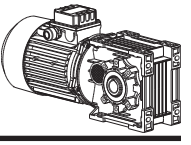

A42 BA Dimensions

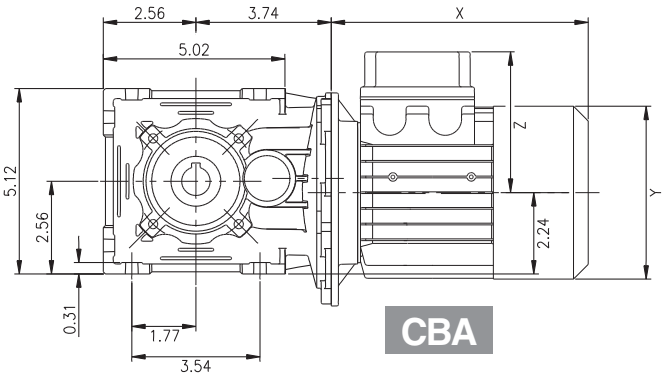

CBA

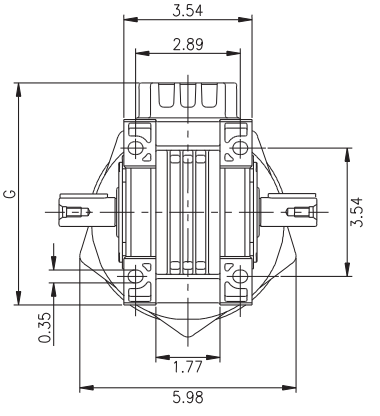

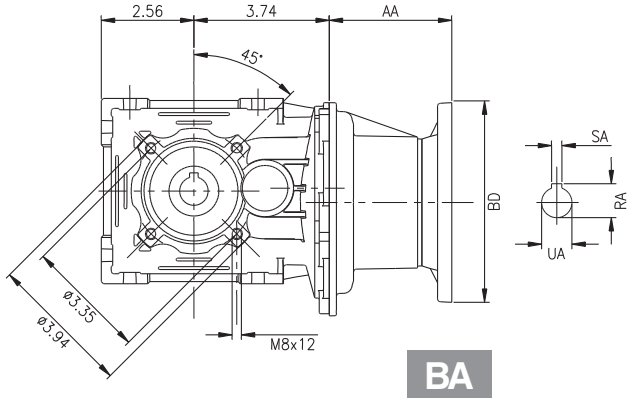

BA

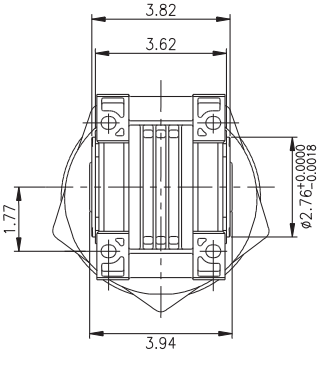

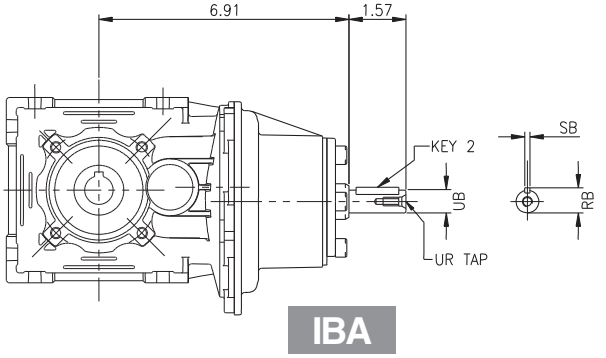

IBA

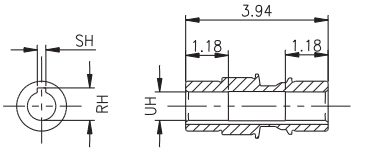

OUTPUT BORE

U	R	S	UT TAP	KEY 1	UH	RH	SH
0.750 +0.0000 -0.0005	0.84	0.1875	1/4-20	3/16 x 3/16 x 1-1/8	0.750 +0.0010 -0.0000	0.84	0.1875
20mm +0.000mm -0.013mm	22.5mm	6mm	M6	6 x 6 x 30mm	20mm +0.021 -0.000	22.8mm	6mm

UB	RB	SB	UR TAP	KEY 2
0.750 +0.0000 -0.0005	0.83	0.1875	1/4-20	3/16 x 3/16 x 1-1/8
16mm +0.008mm -0.003mm	18mm	5mm	M6	5 x 5 x 30mm

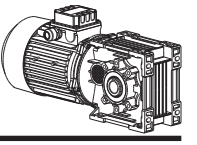

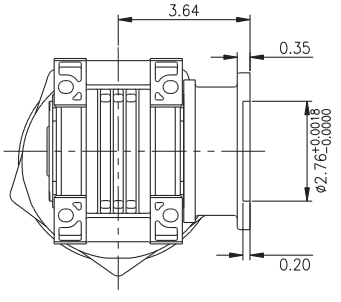

BA…FA

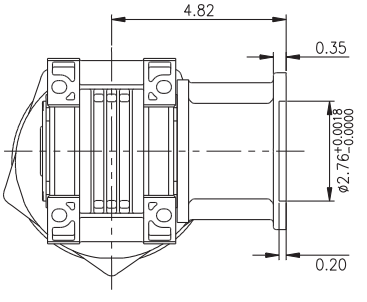

BA…FB

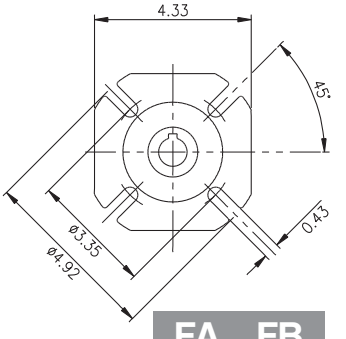

FA…FB

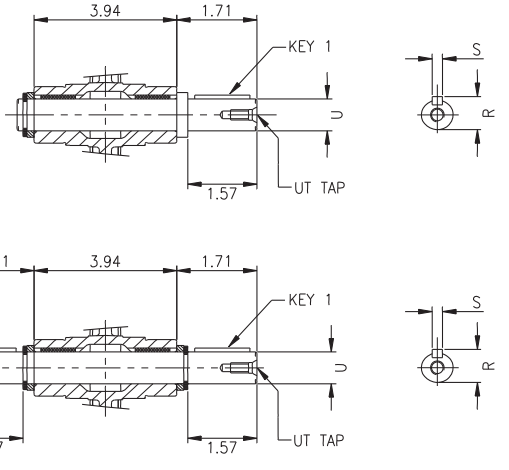

OUTPUT SHAFT

		UA	RA	SA	AA	BD	G
NEMA	56C	0.625 +0.0013 +0.0006	0.71	0.1875	3.78	6.50	-
	140TC	0.875 +0.0016 +0.0008	0.97	0.1875	3.78	6.50	-
IEC	63B5	11mm +0.034mm +0.016mm	12.8mm	4mm	55mm	140mm	161mm
	71B14	14mm +0.034mm +0.016mm	16.3mm	5mm	55mm	105mm	169mm
	71B5	14mm +0.034mm +0.016mm	16.3mm	5mm	55mm	160mm	169mm
	80B14	19mm +0.041mm +0.020mm	21.8mm	6mm	86mm	120mm	179mm
	80B5	19mm +0.041mm +0.020mm	21.8mm	6mm	86mm	200mm	179mm

		Standard Motor			Brake Motor		
		X	Y	Z	X	Y	Z
IEC	63	7.09	4.76	4.07	9.37	4.76	4.07
	71	8.07	5.47	4.41	10.59	5.47	4.41
	80	8.78	6.22	4.78	11.57	6.22	4.78

Output shaft provided as a plug-in accessory.

Torque arm dimensions on page 94.

Shrink disk mounting on page 95.

Dimensions for motor connections on page 96.

Diameter of motor or motor flange may protrude below mounting feet of reducer. Please check motor connection for conflicts.

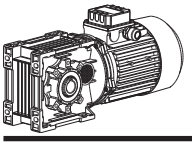

MOTOVARIO™

A52 BA Dimensions

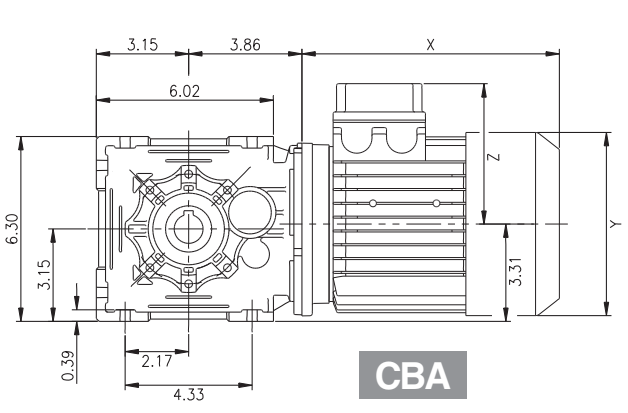

CBA

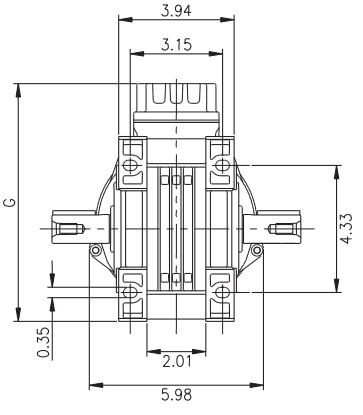

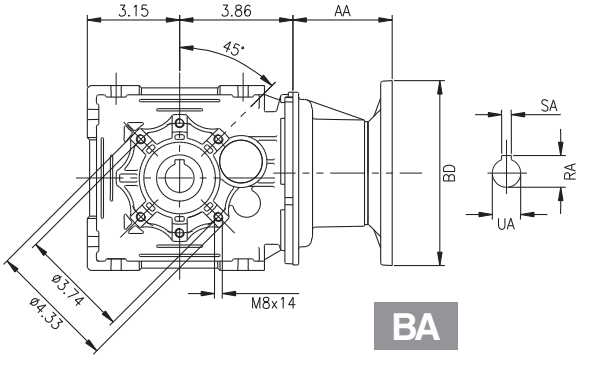

BA

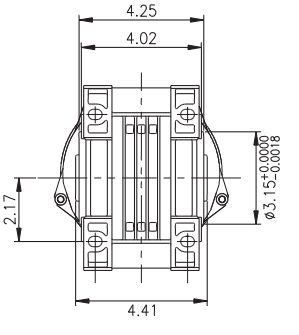

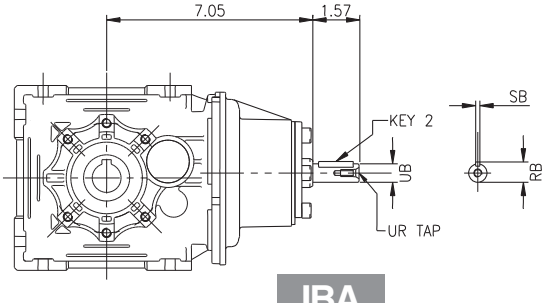

IBA

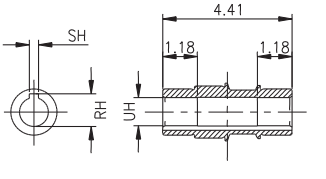

OUTPUT BORE

U	R	S	UT TAP	KEY 1	UH	RH	SH
1.000 +0.0000 -0.0005	1.11	0.250	3/8-16	1/4x1/4x1-1/2	1.000 +0.0010 -0.0000	1.12	0.250
25mm +0.000mm -0.013mm	28mm	8mm	M10	8 x 7 x 35mm	25mm +0.021mm -0.000mm	28.3mm	8mm
					28mm +0.021mm -0.000mm	31.1mm	8mm

UB	RB	SB	UR TAP	KEY 2
0.750 +0.0000 -0.0005	0.83	0.1875	1/4-20	3/16 x 3/16 x 1-1/8
16mm +0.008mm -0.003mm	18mm	5mm	M6	5 x 5 x 30mm

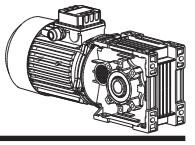

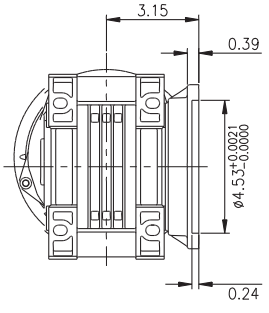

BA...FA

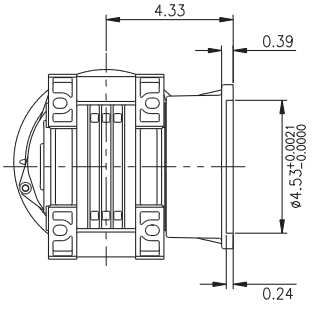

BA...FB

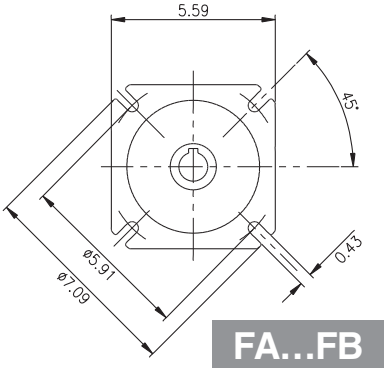

FA...FB

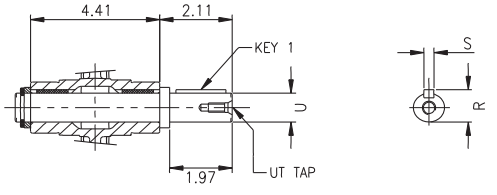

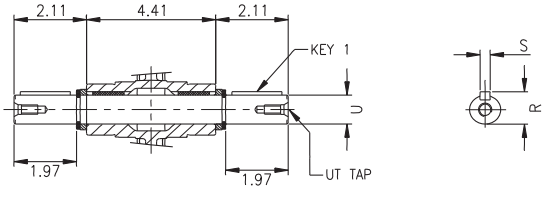

OUTPUT SHAFT

		UA	RA	SA	AA	BD	G
NEMA	56C	0.625 +0.0013 +0.0006	0.71	0.1875	3.78	6.50	-
	140TC	0.875 +0.0016 +0.0008	0.97	0.1875	3.78	6.50	-
IEC	63B5	11mm +0.034mm +0.016mm	12.8mm	4mm	55mm	140mm	188mm
	71B14	14mm +0.034mm +0.016mm	16.3mm	5mm	55mm	105mm	197mm
	71B5	14mm +0.034mm +0.016mm	16.3mm	5mm	55mm	160mm	197mm
	80B14	19mm +0.041mm +0.020mm	21.8mm	6mm	86mm	120mm	206mm
	80B5	19mm +0.041mm +0.020mm	21.8mm	6mm	86mm	200mm	206mm
	90B14	24mm +0.041mm +0.020mm	27.3mm	8mm	86mm	140mm	214mm
	90B5	24mm +0.041mm +0.020mm	27.3mm	8mm	86mm	200mm	214mm

		Standard Motor			Brake Motor		
		X	Y	Z	X	Y	Z
IEC	63	7.09	4.76	4.07	9.37	4.76	4.07
	71	8.07	5.47	4.41	10.59	5.47	4.41
	80	8.78	6.22	4.78	11.57	6.22	4.78
	90S	9.33	6.81	5.10	12.32	6.81	5.10
	90L	10.31	6.81	5.10	13.31	6.81	5.10

Output shaft provided as a plug-in accessory.

Torque arm dimensions on page 94.

Shrink disk mounting on page 95.

Dimensions for motor connections on page 96.

Diameter of motor or motor flange may protrude below mounting feet of reducer. Please check motor connection for conflicts.

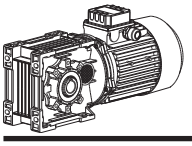

MOTOVARIO™

A53 BA Dimensions

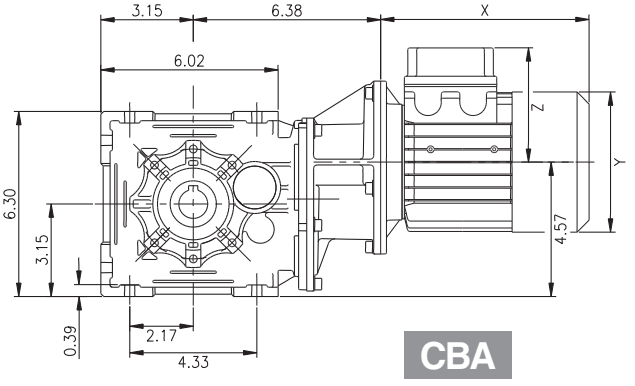

CBA

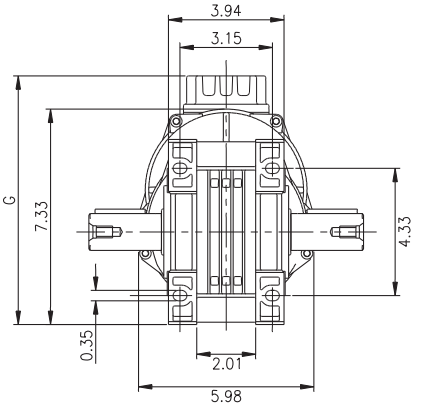

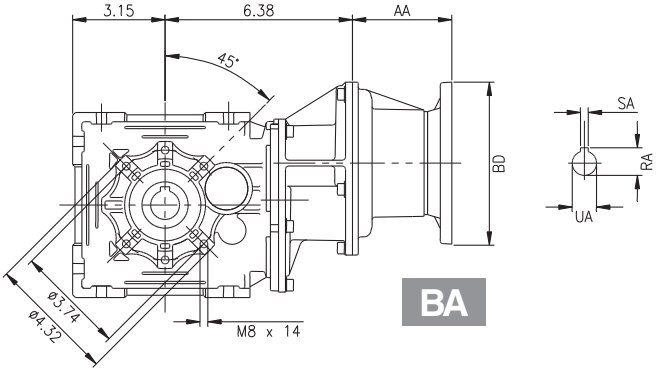

BA

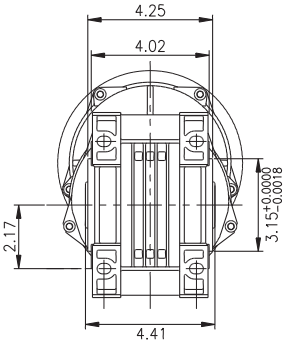

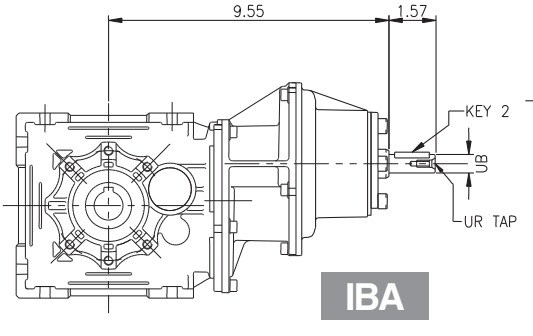

IBA

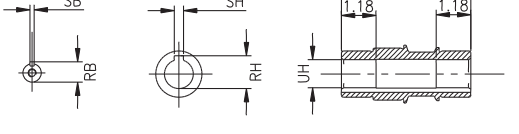

OUTPUT BORE

U	R	S	UT TAP	KEY 1	UH	RH	SH
1.000 +0.0000 -0.0005	1.11	0.250	3/8-16	1/4x1/4x1-1/2	1.000 +0.0010 -0.0000	1.12	0.250
25mm +0.000mm -0.013mm	28mm	8mm	M10	8 x 7 x 35mm	25mm +0.021mm -0.000mm	28.3mm	8mm
					28mm +0.021mm -0.000mm	31.1mm	8mm

UB	RB	SB	UR TAP	KEY 2
0.750 +0.0000 -0.0005	0.83	0.1875	1/4-20	3/16 x 3/16 x 1-1/8
16mm +0.008mm -0.003mm	18mm	5mm	M6	5 x 5 x 30mm

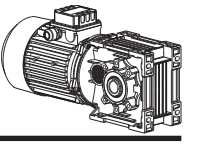

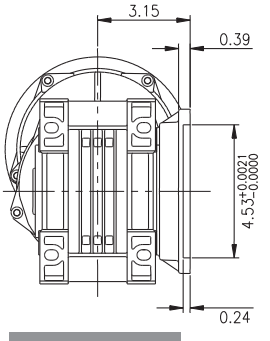

BA...FA

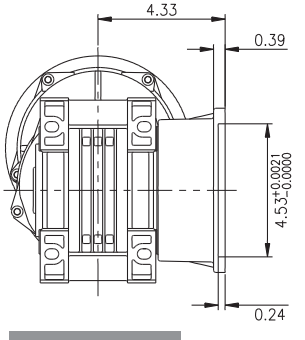

BA...FB

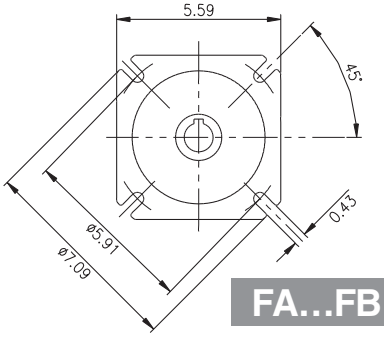

FA...FB

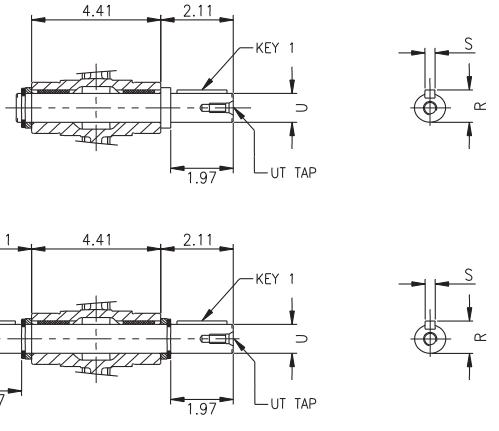

OUTPUT SHAFT

		UA	RA	SA	AA	BD	G
NEMA	56C	0.625 $^{+0.0013}_{+0.0006}$	0.71	0.1875	3.78	6.50	-
	140TC	0.875 $^{+0.0016}_{+0.0008}$	0.97	0.1875	3.78	6.50	-
IEC	63B5	11mm $^{+0.034mm}_{+0.016mm}$	12.8mm	4mm	55mm	140mm	220mm
	71B14	14mm $^{+0.034mm}_{+0.016mm}$	16.3mm	5mm	55mm	105mm	229mm
	71B5	14mm $^{+0.034mm}_{+0.016mm}$	16.3mm	5mm	55mm	160mm	229mm
	80B14	19mm $^{+0.041mm}_{+0.020mm}$	21.8mm	6mm	86mm	120mm	238mm
	80B5	19mm $^{+0.041mm}_{+0.020mm}$	21.8mm	6mm	86mm	200mm	238mm
	90B14	24mm $^{+0.041mm}_{+0.020mm}$	27.3mm	8mm	86mm	140mm	246mm
	90B5	24mm $^{+0.041mm}_{+0.020mm}$	27.3mm	8mm	86mm	200mm	246mm

		Standard Motor			Brake Motor		
		X	Y	Z	X	Y	Z
IEC	63	7.09	4.76	4.07	9.37	4.76	4.07
	71	8.07	5.47	4.41	10.59	5.47	4.41
	80	8.78	6.22	4.78	11.57	6.22	4.78
	90S	9.33	6.81	5.10	12.32	6.81	5.10
	90L	10.31	6.81	5.10	13.31	6.81	5.10

Output shaft provided as a plug-in accessory.

Torque arm dimensions on page 94.

Shrink disk mounting on page 95.

Dimensions for motor connections on page 96.

Diameter of motor or motor flange may protrude below mounting feet of reducer. Please check motor connection for conflicts.

A72 BA Dimensions

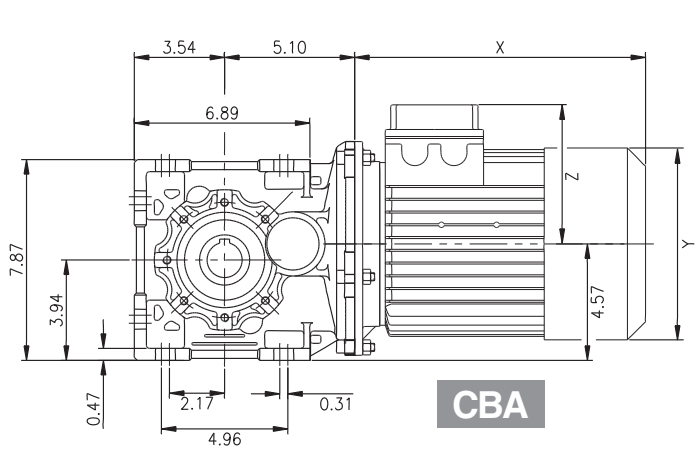

CBA

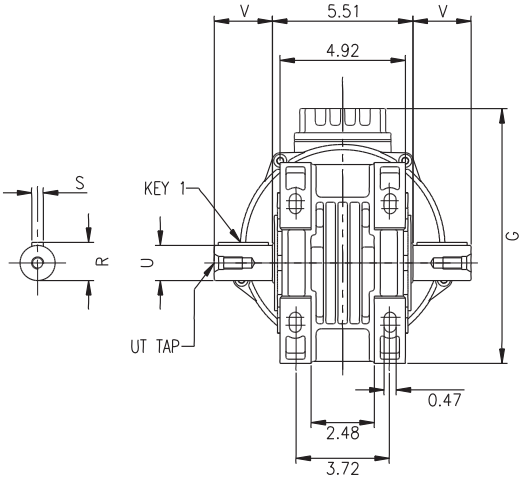

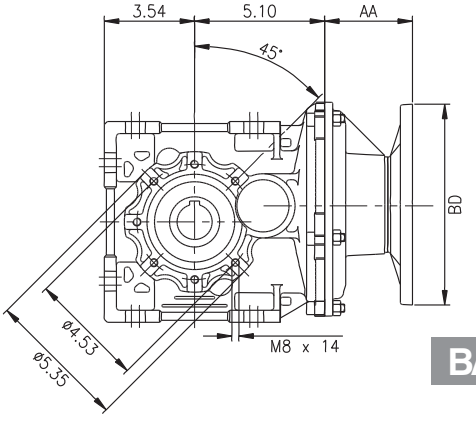

BA

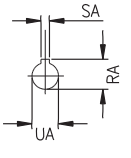

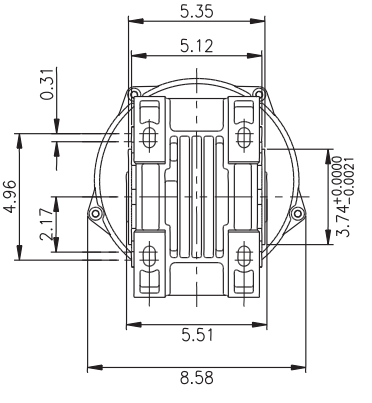

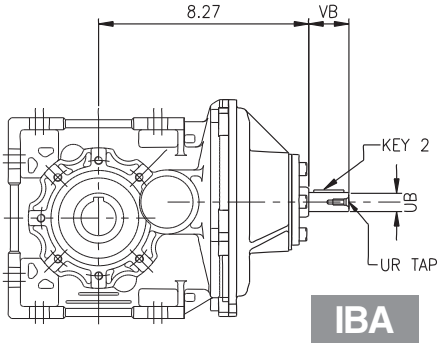

IBA

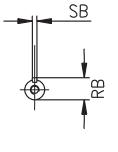

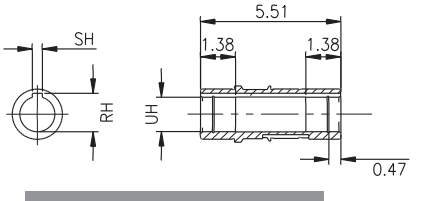

OUTPUT BORE

U	R	S	V	UT TAP	KEY 1	UH	RH	SH
1.250 +0.0000 -0.0006	1.36	0.250	2.36	1/2-13	1/4x1/4x1-7/8	1.375 +0.0010 -0.0000	1.52	0.3125
35mm +0.011mm -0.005mm	38mm	10mm	58mm	M12	10 x 8 x 50mm	35mm +0.025mm -0.000mm	38.3mm	10mm
						30mm +0.021mm -0.000mm	33.3mm	8mm

UB	RB	SB	VB	UR TAP	KEY 2
0.875 +0.0000 -0.0005	0.96	0.1875	1.97	1/4-20	3/16x3/16x1-1/2
19mm +0.009mm -0.004mm	21.5mm	6mm	40mm	M6	6 x 6 x 30mm

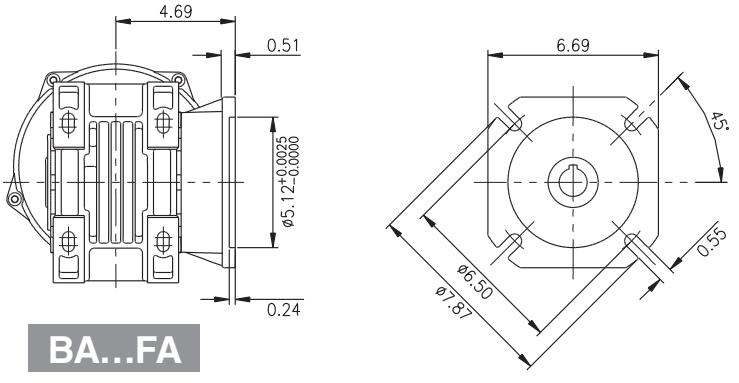

BA...FA

		UA	RA	SA	AA	BD	G
NEMA	56C	0.625 +0.0013 +0.0006	0.71	0.1875	3.98	6.50	-
	140TC	0.875 +0.0016 +0.0008	0.97	0.1875	3.98	6.50	-
	180TC	1.125 +0.0016 +0.0008	1.24	0.2500	3.98	9.00	-
IEC	80B14	19mm +0.041mm +0.020mm	21.8mm	6mm	87.5mm	120mm	238mm
	80B5	19mm +0.041mm +0.020mm	21.8mm	6mm	87.5mm	200mm	238mm
	90B14	24mm +0.041mm +0.020mm	27.3mm	8mm	87.5mm	140mm	246mm
	90B5	24mm +0.041mm +0.020mm	27.3mm	8mm	87.5mm	200mm	246mm
	100B14	28mm +0.041mm +0.020mm	31.3mm	8mm	87.5mm	250mm	255mm
	100B5	28mm +0.041mm +0.020mm	31.3mm	8mm	87.5mm	250mm	255mm
	112B14	28mm +0.041mm +0.020mm	31.3mm	8mm	87.5mm	250mm	270mm
	112B5	28mm +0.041mm +0.020mm	31.3mm	8mm	87.5mm	250mm	270mm

		Standard Motor			Brake Motor		
		X	Y	Z	X	Y	Z
IEC	**80**	8.58	6.22	4.78	11.42	6.22	4.78
	90S	9.13	6.81	5.10	12.17	6.81	5.10
	90L	10.12	6.81	5.10	13.15	6.81	5.10
	100	11.46	7.52	5.45	14.65	7.52	5.45
	112	12.01	8.31	6.04	15.75	8.31	6.04

Torque arm dimensions on page 94.

Shrink disk mounting on page 95.

Dimensions for motor connections on page 96.

Diameter of motor or motor flange may protrude below mounting feet of reducer. Please check motor connection for conflicts.

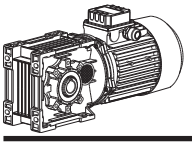

MOTOVARIO™

A73 BA Dimensions

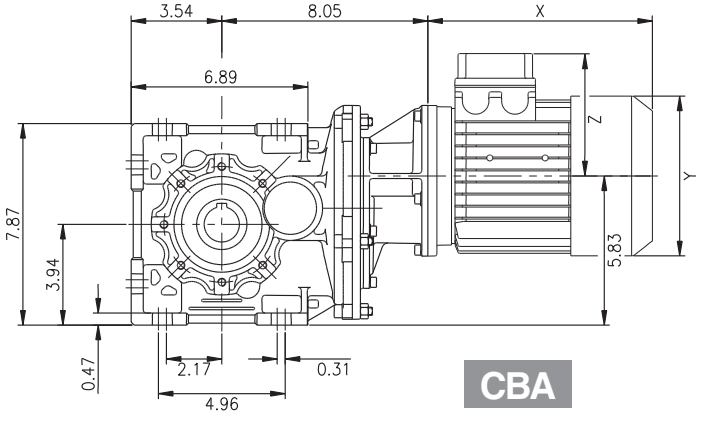

CBA

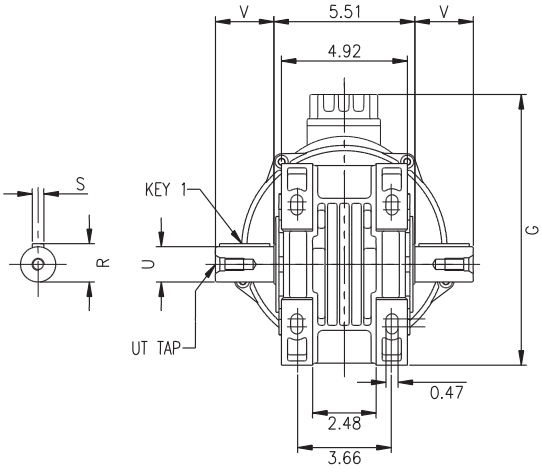

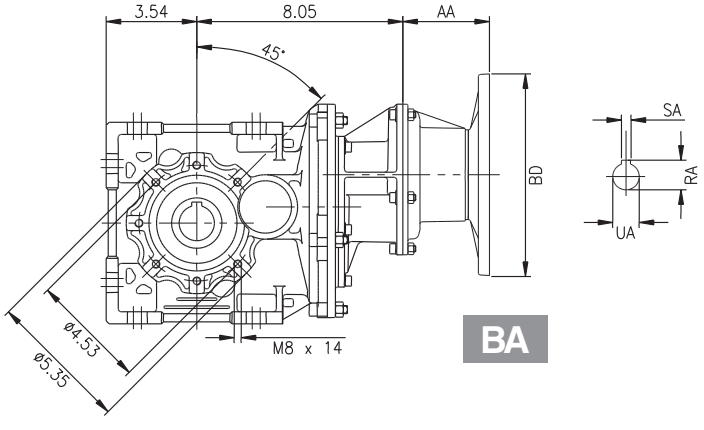

BA

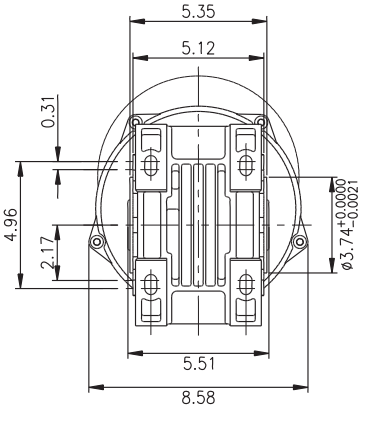

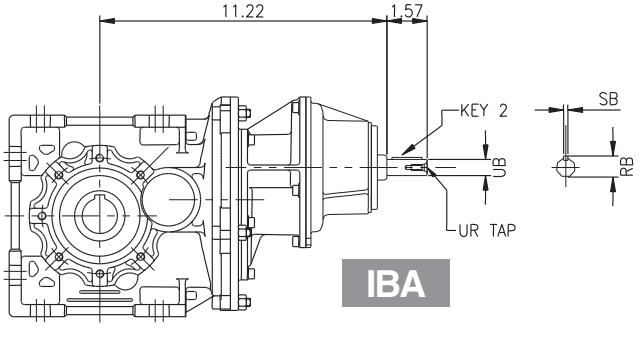

IBA

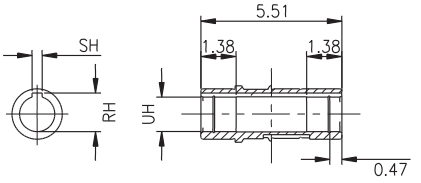

OUTPUT BORE

U	R	S	V	UT TAP	KEY 1	UH	RH	SH
1.250 +0.0000 -0.0006	1.36	0.250	2.36	1/2-13	1/4x1/4x1-7/8	1.375 +0.0010 -0.0000	1.52	0.3125
35mm +0.011mm -0.005mm	38mm	10mm	58mm	M12	10 x 8 x 50mm	+0.025mm -0.000mm	38.3mm35mm	10mm
						30mm +0.021mm -0.000mm	33.3mm	8mm

UB	RB	SB	UR TAP	KEY 2
0.750 +0.0000 -0.0005	0.83	0.1875	1/4-20	3/16x3/16x1-18
16mm +0.008mm -0.003mm	18mm	5mm	M6	5 x 5 x 30mm

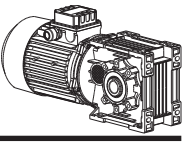

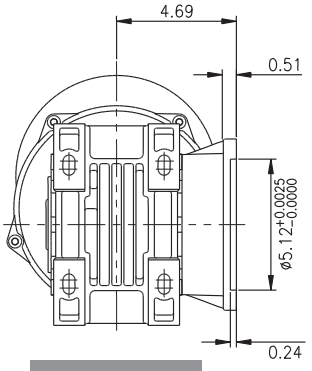

BA...FA

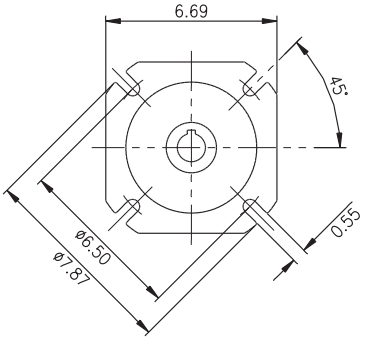

		UA	RA	SA	AA	BD	G
NEMA	56C	0.625 +0.0013 +0.0006	0.71	0.1875	3.78	6.50	-
	140TC	0.875 +0.0016 +0.0008	0.97	0.1875	3.78	6.50	-
IEC	63B5	11mm +0.034mm +0.016mm	12.8mm	4mm	55mm	140mm	252mm
	71B14	14mm +0.034mm +0.016mm	16.3mm	5mm	55mm	105mm	260mm
	71B5	14mm +0.034mm +0.016mm	16.3mm	5mm	55mm	160mm	260mm
	80B14	19mm +0.041mm +0.020mm	21.8mm	6mm	86mm	120mm	270mm
	80B5	19mm +0.041mm +0.020mm	21.8mm	6mm	86mm	200mm	270mm
	90B14	24mm +0.041mm +0.020mm	27.3mm	8mm	86mm	140mm	278mm
	90B5	24mm +0.041mm +0.020mm	27.3mm	8mm	86mm	200mm	278mm

		Standard Motor			Brake Motor		
		X	Y	Z	X	Y	Z
IEC	63	7.09	4.76	4.07	9.37	4.76	4.07
	71	8.07	5.47	4.41	10.59	5.47	4.41
	80	8.78	6.22	4.78	11.57	6.22	4.78
	90S	9.33	6.81	5.10	12.32	6.81	5.10
	90L	10.31	6.81	5.10	13.31	6.81	5.10

Torque arm dimensions on page 94.

Shrink disk mounting on page 95.

Dimensions for motor connections on page 96.

Diameter of motor or motor flange may protrude below mounting feet of reducer. Please check motor connection for conflicts.

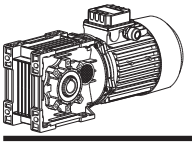

BA Torque Arm

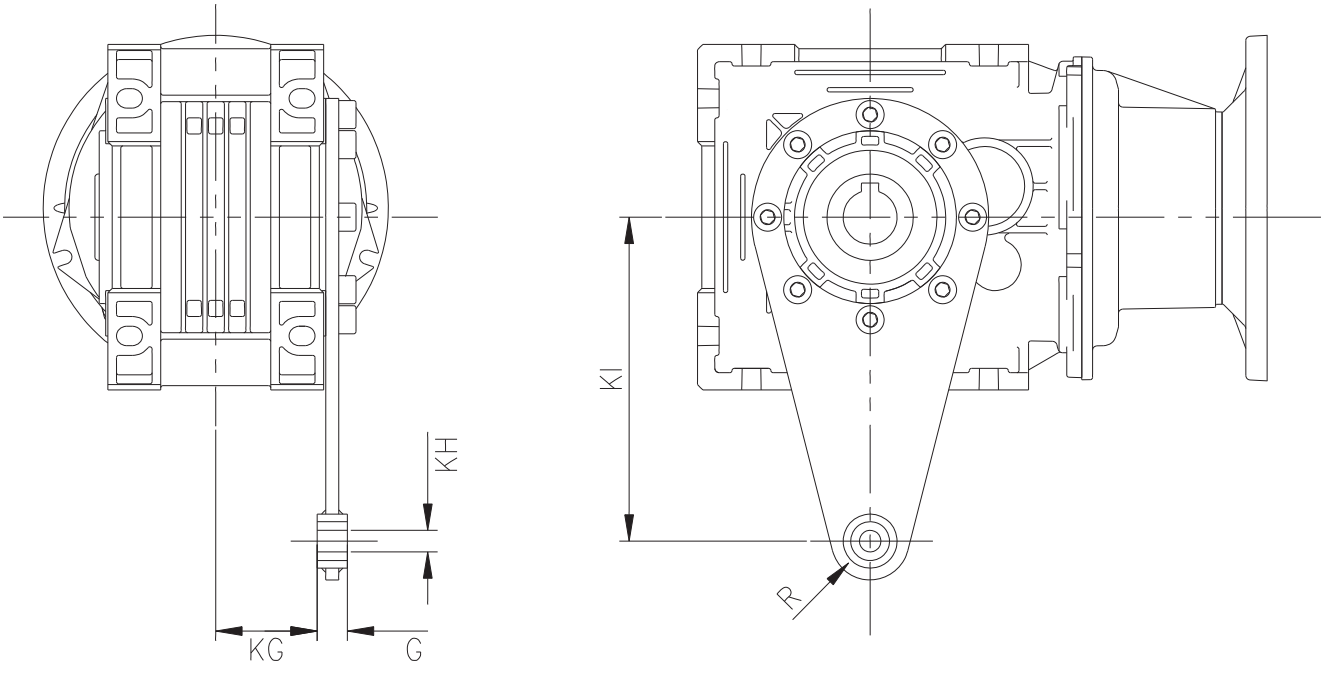

	KI	KG	KH	G	R
A40	3.94	1.61	0.39	0.55	0.71
A50	5.91	1.85	0.39	0.55	0.71
A70	7.87	2.19	0.79	0.98	1.18

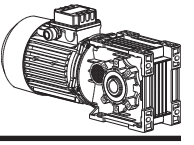

Shrink Disk BA

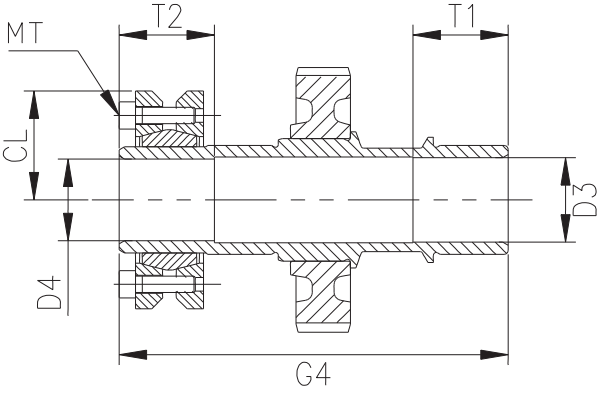

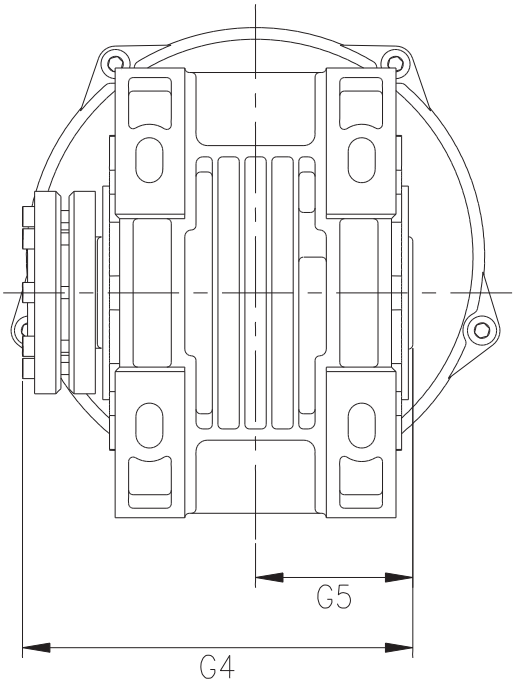

	D3	D4	G4	G5	T1	T2	CL	MT 12.9 (Nm)
A40	$24^{+0.028}_{+0.007}$	$24^{+0.028}_{+0.007}$	130	50	25	35	72	15
A50	$31^{+0.034}_{+0.009}$	$30^{+0.028}_{+0.007}$	143	56	35	35	80	15
A70	$36^{+0.034}_{+0.009}$	$35^{+0.034}_{+0.009}$	173	70	40	35	80	15

Shrink disk dimensions and tolerances are in millimeters.

Shrink disk is only available in metric dimensions.

See page 139 for shaft specifications.

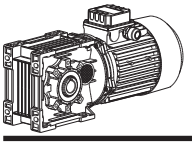

MOTOVARIO™

Motor Connections

Input Flange

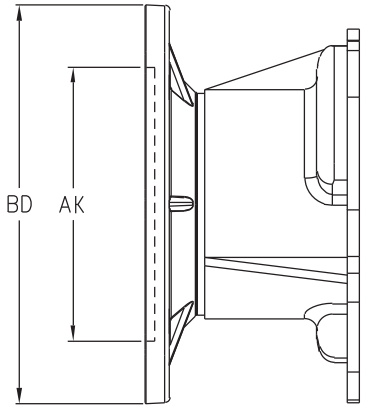

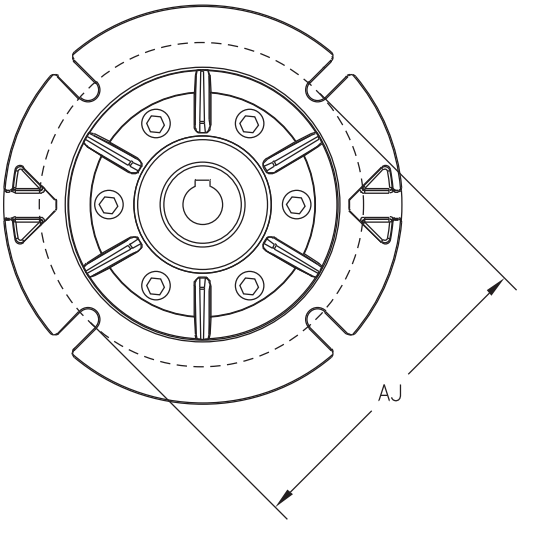

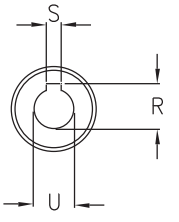

Input Flange Dimensions

		AJ	AK	BD	R	S	U
NEMA	56C	5.875	4.50	6.50	0.71	0.1875	0.625 +0.0013 +0.0006
	140TC	5.875	4.50	6.50	0.97	0.1875	0.875 +0.0016 +0.0008
	180TC	7.250	8.50	9.00	1.24	0.2500	1.125 +0.0016 +0.0008
IEC	63 B5	115mm	95mm	140mm	12.8mm	4mm	11mm +0.034mm +0.016mm
	71B14	85mm	70mm	105mm	16.3mm	5mm	14mm +0.034mm +0.016mm
	71 B5	130mm	110mm	160mm	16.3mm	5mm	14mm +0.034mm +0.016mm
	80B14	100mm	80mm	120mm	21.8mm	6mm	19mm +0.041mm +0.020mm
	80 B5	165mm	130mm	200mm	21.8mm	6mm	19mm +0.041mm +0.020mm
	90B14	115mm	95mm	140mm	27.3mm	8mm	24mm +0.041mm +0.020mm
	90 B5	165mm	130mm	200mm	27.3mm	8mm	24mm +0.041mm +0.020mm
	100B14	130mm	110mm	160mm	31.3mm	8mm	28mm +0.041mm +0.020mm
	100 B5	215mm	180mm	250mm	31.3mm	8mm	28mm +0.041mm +0.020mm
	112B14	130mm	110mm	160mm	31.3mm	8mm	28mm +0.041mm +0.020mm
	112 B5	215mm	180mm	250mm	31.3mm	8mm	28mm +0.041mm +0.020mm

B14

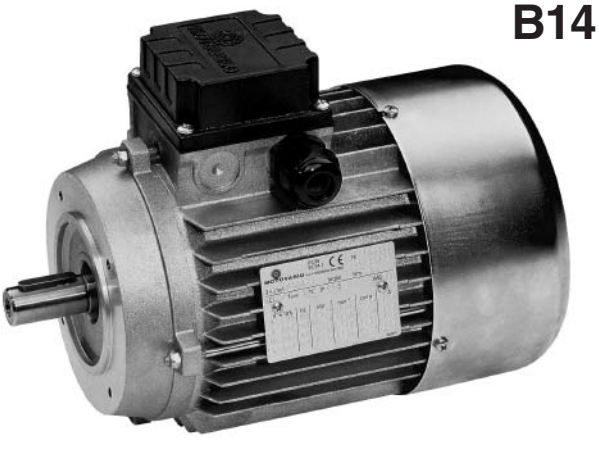

B5

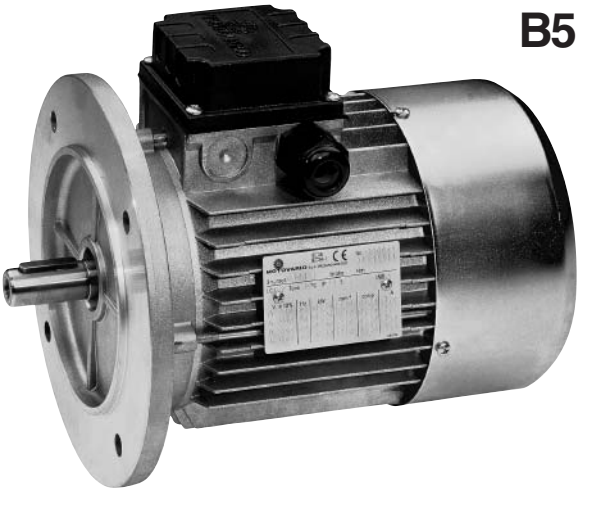

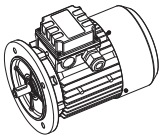

AC Motors General Features

Three-phase asynchronous electric motors, totally enclosed, fan cooled ventilation, cage rotor in die-cast aluminum alloy or aluminum, insulation class F, protection degree IP 55, standardized height to center and dimensions from 63 to 132, standardized powers from 0.09 to 11kW (0.12HP to15HP).

Standard Production	**Series**
Three phase AC motors	T
Three phase AC brake motors	TB

Conformity with Reference Standards

The standard electric motors conform to the following international standards for rotating electrical machines:

IEC 34-1 General requirements for rotating electrical machines
IEC 34-2 Test methods to determine losses and efficiency
IEC 34-5 Classification of protection degree
IEC 34-6 Cooling methods
IEC 34-7 Classification of construction shapes and assembly arrangements
IEC 34-8 Marking of terminals and direction of rotation
IEC 34-9 Noise limit
IEC 34-12 Starting specifications of single-speed three-phase motors for voltages <660V
IEC 72-1 Construction dimensions in relation to the nominal power delivered to the shaft
IEC 38 Standardized supply voltage

For conformity with other standards not mentioned above, contact Motovario for assistance.

Conformity with Community Directives – CE Marking

The standard electric motors are in conformity with the following Directives:

1. Low Voltage Directive 73/23/EEC (19/02/1973) revised by Directive 93/68/EEC (22/07/1993)
2. EMC Directive 89/336/EEC concerning the intrinsic specifications on emissions and levels of immunity
3. Machine Directive 89/392/EEC revised by Directive 91/368/EEC provided the installation has been performed correctly by the machinery manufacturer (in conformity with our installation instructions and with the EN 60204 standard "Electrical Equipment of Industrial Machinery")

Conformity to the Machinery Directive and to EMC Directive of the complete installation is the exclusive responsibility of the machine manufacturer.

Specification UL/CSA

Three-phase electric motors series T can be manufactured in compliance with standards UL1004 "Electric motors" and CSA C22.2 No.100-92 "Motors and Generators" for the American and Canadian market, respectively.

MOTOVARIO – UL File E194243 – PRGY2 – "Motors – Component"
MOTOVARIO – UL File E194243SP – OBJY3 – "Component – Systems, Electrical Insulation"
MOTOVARIO – CSA Certificate 1143609 (LR114895-1) – Class 4211 01 – "Motors and Generators"

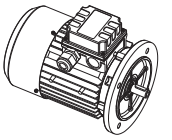

AC Motors Design Features

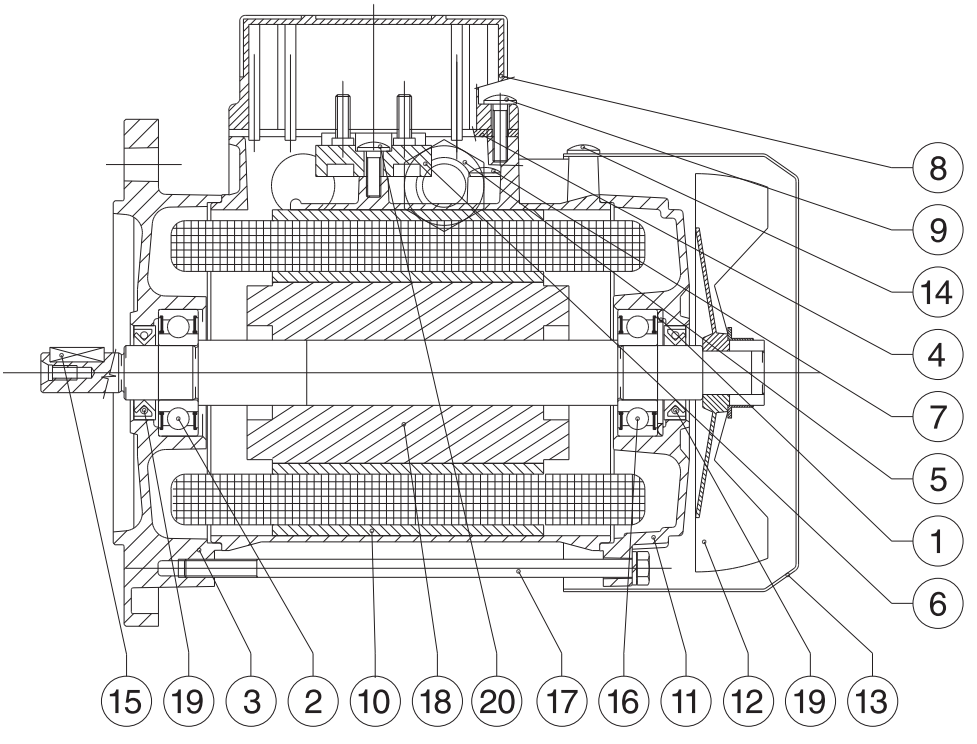

1. PRELOADED SPRING
2. BEARING ON DRIVING SIDE
3. FLANGE/SHIELD DRIVING SIDE
4. TERMINAL BOX COVER GASKET
5. CABLE GLAND
6. TERMINAL BOARD
7. GROUND SCREW
8. TERMINAL BOX COVER
9. TERMINAL BOX FASTENING SCREWS
10. CASING COMPLETE WITH WINDING
11. SHIELD OPPOSITE TO DRIVING SIDE
12. FAN
13. FAN COVER
14. FAN COVER FASTENING SCREWS
15. KEY
16. BEARING OPPOSITE TO DRIVING SIDE
17. STUD
18. ROTOR WITH SHAFT
19. OIL SEAL
20. FASTENING SCREW FOR TERMINAL BOARD

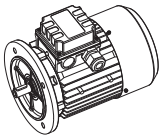

AC Motors Design Features

Casing

- Die-cast aluminum alloy, chosen for its high tensile strength and corrosion resistance
- Finned; casing not painted (painting by request)
- Fitted with lifting rings starting from size 112
- Fitted with or without mounting feet, according to IEC72-1
- Fitted with terminal for grounding inside the terminal box. External grounding connection on the motor casing is available. The grounding terminal is marked with the symbol ⏚.

Flange / Shield

- Die-cast aluminum alloy
- The rear shield is made of cast iron for versions with electromagnetic brake or backstop device
- By request,non-standardized mounting flanges (reduced or oversized)
- Starting from size 100, aluminum shields and flanges have a steel oil seal fitted in the bearing seat; flanges size 160 and larger are made of cast iron.

Terminal Box Cover

- Made of black polycarbonate; die-cast aluminum alloy available by request.
- IPx6 protection degree is available by request on all versions.

Shaft

- In steel C40 or similar
- Standardized output shaft and key dimensions according to IEC72-1
- Threaded hole on driving end of shaft
- Double-extended shaft available by request.

Rotor

The squirrel-cage type rotor is die-cast aluminum or aluminum alloy. The motor is designed so the angle, number of slots and geometric shape of the rotors is relational to the number of stator slots and the polarity of the motor. This design ensures the most regular motor operation even in variable speed applications by decreasing the phenomenon of eddy currents and torque pulses. These phenomena are detrimental to the motor's correct operation and dynamic performance. Rotor balancing, from frame size 80, is performed dynamically with the half-key method in accordance with ISO 2373 standard rating G6.3 for normal vibration. Increased balancing (rating G2.3) is available by request.

Stator and Winding

- Sheet metal with checked magnetic properties
- Appropriate number of slots and geometric shape in relation to the motor's polarity for regular motor operation
- Copper winding with double-layer copper glazing G2 degree, H class, capable of providing considerable mechanical strength and ensuring an adequate thermal reserve to slow the aging of the motor
- Class F insulation system
- 100% testing of all electrical parameters

Bearings

Standard bearings are radial ball bearings, standard clearance, 2RS NRB contact seals (with sheet steel reinforcement on both sides of the bearing), lubricated for life. Rear bearings are pre-loaded with a compression ring that acts on the external ring of the bearings. Pre-loading the bearing decreases operating noise and enables axial movement by thermal action.

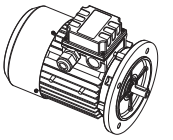

AC Motors Design Features

Fan

Cooling is provided in both directions of rotation by a centrifugal fan with radial blades, keyed externally to the non-drive-end shaft. The standard fan is thermoplastic material strengthened with fiberglass and is suitable for normal motor operating temperatures. The fan can be made of aluminum or anti-static, self-extinguishing material on request.

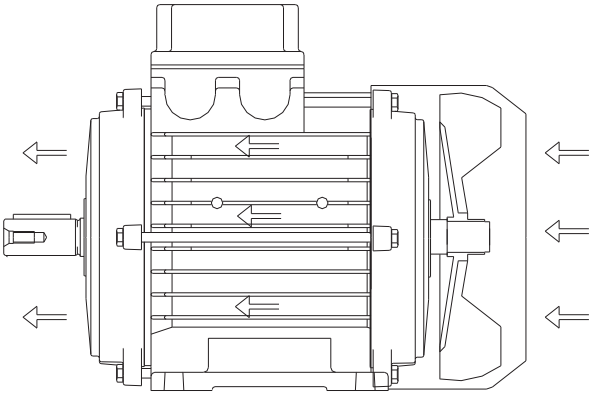

IC411

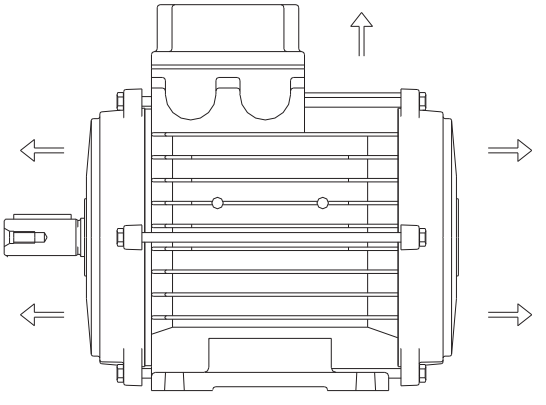

IC410

Fan Cover

The fan cover is galvanized stamped plate, shaped to avoid phenomena of resonance and to improve the airflow developed by the fan. The air feed grille holes are relational to the distance from the accessible rotating parts, in conformity with the safety requirements of the UNI EN 294 standard.

Cable Entry

Cable Entry and nameplate can be oriented 180° from standard.

Motor Size	Strain Relief	Cable Entry min - max (mm)	Feed Clamps	max. Fastening Moment (Nm)
63	M16 x 1.5	5 - 10	M4	2
71	M20 x 1.5	6 - 12	M4	2
80	M20 x 1.5	6 - 12	M4	2
90	M25 x 1.5	9 - 17	M5	3
100	M25 x 1.5	9 - 17	M5	3
112	M25 x 1.5	9 - 17	M5	3
132	M32 x 1.5	11 - 21	M6	4

Standard NPT Adapters

Metric Tap	IEC Frame Motor	NPT Adapter
M16	63	1/2"
M20	71-90	1/2"
M25	90	1/2"
M25	90-132S	3/4"
M32	132M/L	1"
M32	132M/L	1-1/4"

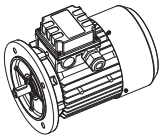

IP Protection Degree (IEC 34-5)

Standard electric motors have protection degree IP55. By request, it is possible to have protection degrees IP56, IP65, or IP66. Protection degrees higher than IP66 cannot be applied.
Protection degree of the motors is guaranteed and certified by tests carried out in a qualified testing room.
Note: Protection degree, by definition, cannot refer to the oil seal. As an option for IP55 motors, an oil seal on the drive side can be specified, if necessary and by request.

Thermal Classification

Standard electric motor windings conform with thermal classification F, in accordance with publication IEC34-1. The temperature rise of standard powers does not exceed class B. This results in less thermal strain on the motor insulation for longer motor life. Motors that conform to thermal classification H are available by request, depending on the ambient temperature of the application.

Operating Conditions

Altitude
Standard ratings are based on an altitude of 1000 meters (3281 feet) above sea level (ASL)

Ambient Temperature at the Place of Installation
Minimum -15°C (5°F), maximum +40°C (104°F).
If the motors are destined to operate between 1000m and 4000m ASL, or if the ambient temperature is between 40°C and 60°C (104°F and 140°F), it is necessary to apply a corrective coefficient to the motor power for the motor to maintain its thermal reserve (maximum temperature reached by the windings in normal operating conditions).
Other conditions of altitude and/or temperature must be discussed with Motovario Technical Support.

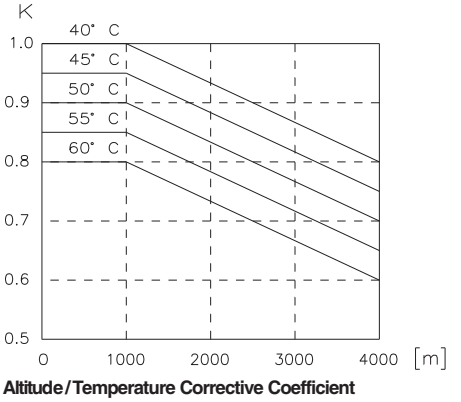

Altitude / Temperature Corrective Coefficient

Humidity
The system of impregnation adopted to insulate the motor windings is suitable for temperate climates where the relative humidity of air does not exceed 90%. This treatment is designated Tropicalization TROP1, and is standard on all Motovario motors.
Climatic conditions of the application with higher values of relative humidity (e.g., tropical climates) need additional protection. It is possible to treat the windings with an additional isolating glaze that has excellent resistance to chemical agents: water, acid (10% sulfuric acid solution), alkalis (1% sodium hydroxide), salt water or mineral oils (ASTM-D-115-55). This treatment is designated Tropicalization TROP2.

Condensation Drainage
Applications that are outdoors, in places with high humidity and/or wide temperature ranges, can be supplied with condensation drainage holes, by request. Plastic caps close the drainage holes to maintain the protection degree stated on the motor nameplate. The drains must be opened periodically to let collected moisture out. The motor operating position must be stated at the time of ordering to position the drainage holes correctly.

Anti-Condensation Heaters
In the case of motors designated for particularly harsh environments, with extremely low temperatures, high humidity levels and/or extremely wide temperature ranges, it is advisable to use anti-condensation heaters.

Low Temperature Applications
In case of applications with ambient operating temperature between -50°C and -15°C (-58°F and 5°F), the electric motor can be equipped with special components:

- Bearings with special lubrication and higher backlash suitable for low running temperatures
- Silicone oil seal
- Aluminum fan and terminal box cover
- Metal plugs and cable glands

Such applications could cause condensation and may require TROP2 winding protection, drain holes and anti-condensation heaters.

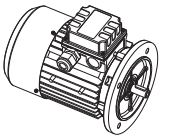

Electrical Conditions

Supply Voltage and Frequency
According to IEC38 the supply voltage for standard three-phase motors is 230/400V with tolerance ±10%; the supply frequency is 50Hz. In agreement with Publication IEC38, operation of standard three-phase motors is ensured in the following voltage ranges where, at 60Hz, the motor supplies power equal to 1.2 times the nominal power at 460V. The nominal values at both 50Hz and 60Hz are given on the motor nameplate.
Standard voltage: 230/400V/50Hz ±10%, 230/460V/60Hz ±10%

Duty

Duty is defined as the load condition of the application, including starting, electrical braking, operating with no load and rest. The duration and sequence of these factors must also be considered when defining the duty of an application.
Duty can be described according to IEC 34-1 standards or by user defined graphs of load condition variables. If the load conditions are not defined, estimate the duration and sequence of the load variables. Do not underestimate the load conditions. If the duty is not stated, S1 service is applied.
The motor rating tables (pp. 224-227) refer to TEFC motors under normal operating conditions with S1 service.
Duty type is printed on the motor nameplate.

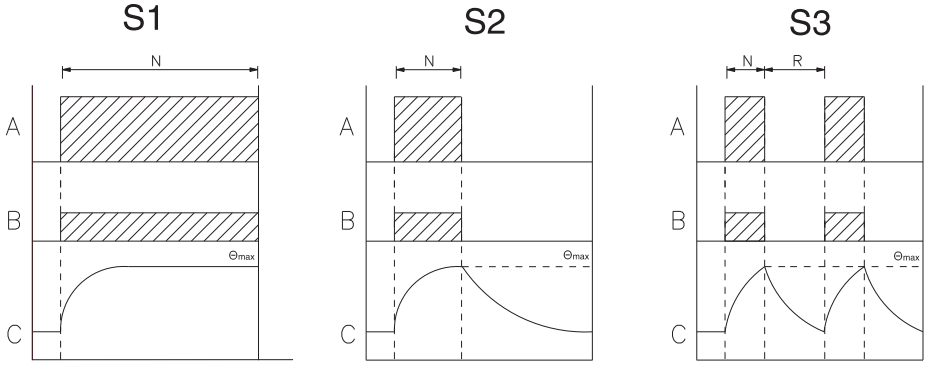

A - Load
B - Energy Loss
C - Temperature
N - Operating Time, Constant Load
R - Rest Period
Θmax - Maximum Temperature Reached

Protection

All electrical equipment must be protected against damage from trouble or abnormal operation. The following possibilities must be taken into consideration:

- Over-current from short-circuiting
- Overload currents
- Break or decrease in supply voltage
- Excessive speeds of the elements of the machine

For safety reasons, protect against direct contact with live parts and indirect contact with parts normally not live but which could become live in the event of the insulation failing.

Bimetallic Thermo-Protector
Application and operation:

- Bimetallic contact N/C (normally closed); N/O (normally open) by request
- The thermo-protector is inserted directly inside the windings of the motor, which are then formed and impregnated. Three-phase motors have two bimetallic thermo-protectors connected in series and in close contact with the three phases of the winding. The protector ensures the circuit opens quickly without the maximum admitted temperature for the windings being exceeded, in accordance with IEC34-1, depending on the motor insulation class. Thermo-protectors are normally used as sensors and control a remote switch that de-energizes the motor.
- In single-phase motors it is possible to connect the thermo-protector directly to the motor supply and to cut off current instantly. To prevent the supply automatically being restored, prohibited according to EN60204-1, it is possible to use a special thermo-protector (type R1) that, in parallel with the bimetallic contact, has a resistor capable of keeping the contact hot even if the motor has cooled, thereby permitting the motor to be restarted only manually with the power switch.

Thermistor – PTC
Thermistors are temperature sensors with high temperature sensitivity. Resistance sharply increases as the temperature approaches the trip level. A release device that protects the equipment can use this signal to de-energize the motor.

PT100
The PT100 is a device that varies its resistance increasingly and continuously as the temperature changes. The PT100 is designed to monitor the temperature (i.e.: of the motor windings) with third party electronic equipment.

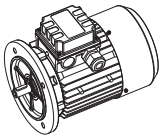

MOTOVARIO™

Variable Speed Applications

Inverter – Operating Areas

Inverter-driven motors can be categorized in three zones:

Zone 1 – Constant Voltage/Frequency Ratio

Standard motors, 230/400V/50Hz, 400V/50Hz connected in Y to a three phase inverter
Standard motors, 230/400V/50Hz, 230V/50Hz connected in Δ to a single phase inverter
Standard motors, 230/460V/60Hz, 460V/60Hz connected in Y to a three phase inverter
Standard motors, 230/460V/60Hz, 230V/60Hz connected in Δ to a single phase inverter

Zone 1 identifies inverter-driven motor operation with constant torque. The lower limit is indicated as f1=25Hz for self-ventilated (TEFC or IC416) motor, f1=18-20Hz for the forced ventilation motor. Applications requiring lower frequencies are possible, but the motor is then considered de-rated and the nominal torque is not guaranteed.
If the current required by the motor will not strain the inverter, the available ratio is 400V/87Hz connected in Y. The magnetic flux in the motor stays virtually constant up to 87Hz. This extends the constant torque zone to 87Hz without saturating the machine and without straining the motor insulation beyond its nominal specifications.

Zone 2 – Constant Voltage

Applications in Zone 2 keep the motor power at a constant value, defluxing the motor as the frequency increases. The upper limit is f2=90-100Hz. Above this frequency range, it is physically impossible to decrease the motor flux. This keeps the motor performance constant.

Zone 3

An area with constant voltage, with decreasing torque and power.

Motor Supply with Inverter

Standard three-phase asynchronous electric motors can be used in variable speed applications, supplied with a PWM inverter, while meeting the general requirements for rotating machines established by IEC34-1. Conformity is possible due to the considerable dimensions of the electromagnet and the accurate, high thermal and dielectric margin insulation. This also allows good performance with overloads and limit frequency applications.
Do not strain the electric motor's insulation. The motor insulation will not sustain damage if used properly and in conformity with IEC34-1. Heavy duty applications with the motor connected at considerable distance from the inverter and/or with several motors connected in parallel to the same inverter require the user to check the wave shape of the output voltage and use filters to attenuate the harmonic content. These situations imply the use of phase separators between windings (by request for motors up to size 90, standard for sizes 100-132). Please consult with Motovario in these applications.
Applications with an extremely high or low speed may require the use of forced ventilation to improve cooling (standard fan cooling is insufficient) and to decrease the noise caused by self-ventilation. Forced ventilation also decreases the load caused by the airflow rate produced by the fan, which is considerable at high speeds. The operating limits of the servo-fan are directly connected to the conditions of load (duration and quantity).
Applications at speeds above 3600 RPM are not specified in this publication and must be discussed with Motovario.

Sizing the motor correctly for inverter applications is crucial. Please provide detailed information about the application, including the operating voltage value, frequency required, torque and power required, application duration and required ventilation. Careful evaluation of the torque/rpm curve related to the frequency variation and/or voltage variation, as well as the operating details of the application, will allow accurate and correct sizing of the motor.

In addition to forced ventilation, motors can be equipped with an incremental encoder to measure position and rpm.
Brake motors can be used with an inverter, but only if the power supply of the brake is independent.

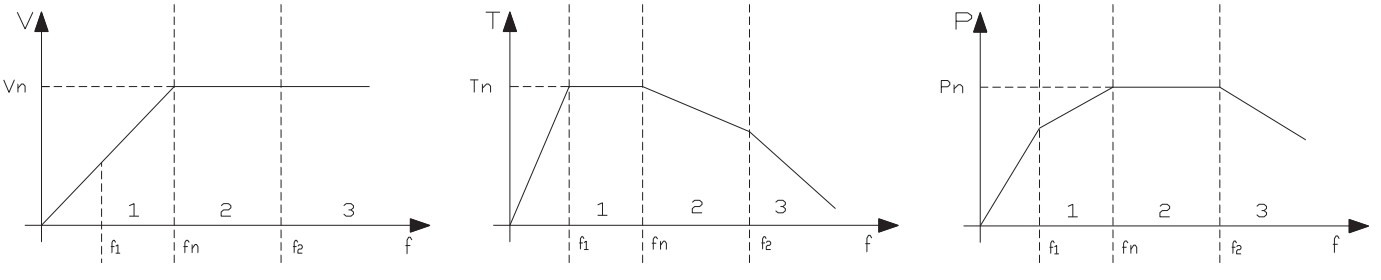

1. Extension of the line with constant torque for operation with vector inverter and forced ventilation (IC416), service S1
2. Extension of the curve V/f = constant for operation with vector PWM inverter and forced ventilation (IC416), service S1
3. Typical curve for operation with vector PWM, self-ventilation (IC411) and service S1
4. Extension of the curve as per point 3 for motor operation 230/400V/50Hz, connection Y and V/f=400/87

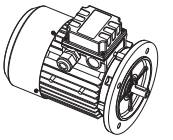

Cooling

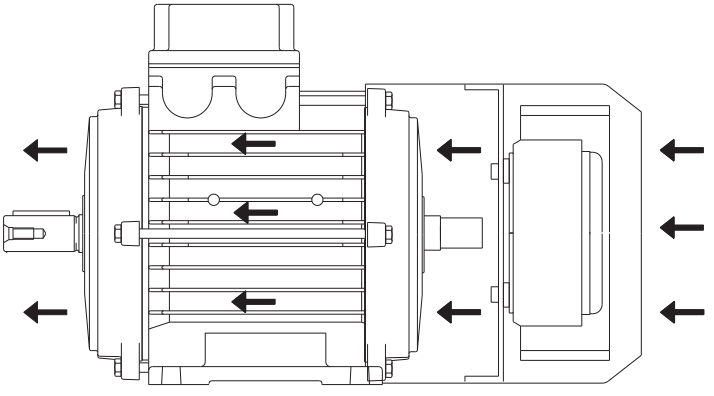

IC416

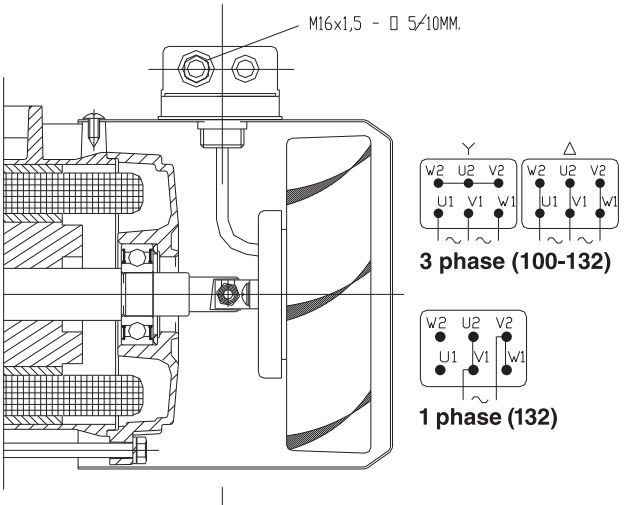

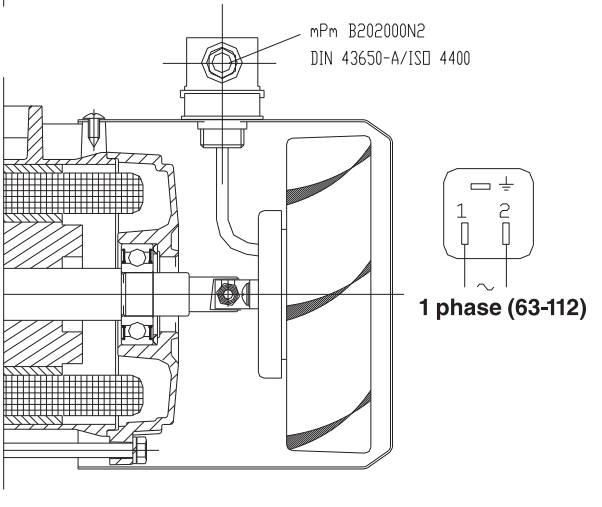

Forced Ventilation

Variable speed motor applications may require forced ventilation (cooling method IC416), using an axial flow servo-fan whose airflow rate is independent of the drive shaft speed. The independent power supply connects directly to the fan cover (single phase version 230V/50-60Hz), or through a separate terminal box cover applied on the fan cover (three phase version 230/400V/50Hz, 230/460V/60Hz). Protection degree of the fan is IP44 and can be supplied in higher protection degrees and/or different voltages.

The servo-fan is recommended for motor speeds slower than the nominal speed, when the air flow rate of the standard fan would be insufficient for correct cooling. It is also recommended for motor speeds faster than the nominal speed, when the losses due to ventilation of the standard fan would no longer be negligible compared to the nominal load. The standard motor fan is also very loud at high speed.
The speed limits that determine the need for forced ventilation depend on the load conditions subjected to the motor in relation to the speed and type of service. Two pole motors, for example, have a higher airflow rate using the standard fan than the forced ventilation fan. Therefore, the correct use of servo-fan depends on the load (duration and quantity).

Forced ventilation fans are supplied as a kit, therefore it is possible to modify a standard self-ventilated electric motor (IC411) into a motor with forced ventilation (IC416) by:

- Disassembling the standard fan cover, unscrewing the fastening screws from the motor casing
- Removing the fastening bushing of the plastic fan and prying off the fan
- Assembling the forced ventilation kit by tightening to the motor casing with the fastening screws of the fan cover

Using the forced ventilation kit determines the motor length (see dimension tables).

	50Hz					60Hz				
	V @ 50Hz	KW	A @ 230V	A @ 400V	m^3/h	V @ 60Hz	KW	A @ 230V	A @ 460V	m^3/h
63	230	0.015	0.12	-	162	230	0.014	0.12	-	162
71	230	0.015	0.12	-	162	230	0.014	0.12	-	162
80	230	0.039	0.25	-	302	230	0.036	0.22	-	326
90	230	0.039	0.25	-	302	230	0.036	0.22	-	326
100	230	0.058	0.26	-	615	230	0.068	0.30	-	745
112	230	0.068	0.30	-	895	230	0.082	0.36	-	970
132	230	0.068	0.30	-	895	230	0.082	0.36	-	970

100	230/400	0.043	0.21	0.12	540	230/460	0.040	0.21	0.12	300
112	230/400	0.053	0.26	0.15	830	230/460	0.070	0.26	0.15	940
132	230/400	0.071	0.28	0.16	1040	230/460	0.093	0.28	0.16	1160

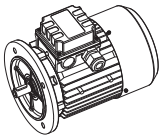

MOTOVARIO™

Accessories

Rain Cover

A rain cover is recommended whenever the motor shaft is positioned vertically down and the application is outdoors. The cover attached to the fan housing prevents rain from entering the motor and damaging the windings.
The rain cover is recommended whenever damage may result from infiltration of water, partial blockage of the air grill, or an obstruction preventing the fan and the shaft from turning correctly.
The cover does not alter the effects of the fan to cool the motor.
The application of the cover determines a height variation of the motor.

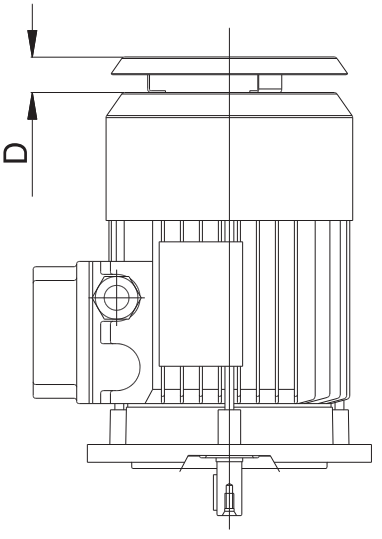

Rain Cover

Motor	D
63	18
71	18
80	20
90	25
100	25
112	30
132	35

Backstop Device

When reverse motor rotation caused by the dragging action of the load must be prevented, a backstop device can be installed on the motor's fan side.
Because of the high rotation speed, backstop devices are not recommended for use with two pole motors.
The direction of rotation of the motor (clockwise or counterclockwise) must be stated when ordering for proper motor operation. A label on the fan cover shows the available direction of rotation.
The backstop device is sized to withstand the maximum torque transmitted by the motor and to work at the nominal motor speed without excessive wear. The backstop device is also lubricated for life with specific grease. The design of the backstop does not add any dimension to the standard motor.

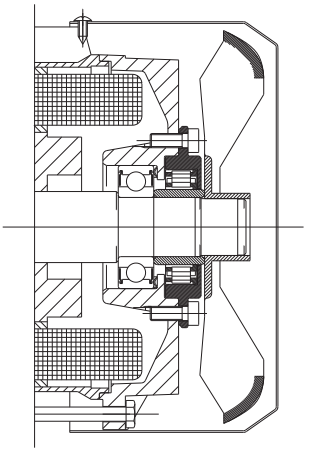

Backstop Device

Connection for Fast Response Times

Motors can be supplied with a quick connecting adapter to attach power cables easily and safely. The connector has a modular structure so voltage values and current capacities can be adapted according to the motor type. The connector has IP65 protection.
The motor is supplied with a fixed part (A) incorporated in the terminal box. The detachable part (B) can be supplied by request.
The connector can be supplied as:

- 10-pin connector for standard three-phase motors (series T). Brake motors (series TB) can also be supplied with a 10-pin connector with or without thermal protector unless the brake has an independent AC power supply. Three-phase motors can be supplied with the detachable part (B) with double connection for Δ-Y.
- 18-pin connector for three-phase brake motor (series TB), with or without thermal protector, internally connected or independently powered AC brake.

	5p		10-18p	
	d (mm)	d1 (mm)	d (mm)	d1 (mm)
63	96	120	122	160
71	108	132	134	172
80	119	143	145	183
90	127	151	157	195
100	136	160	166	204
112	-	-	181	219
132	-	-	122	260

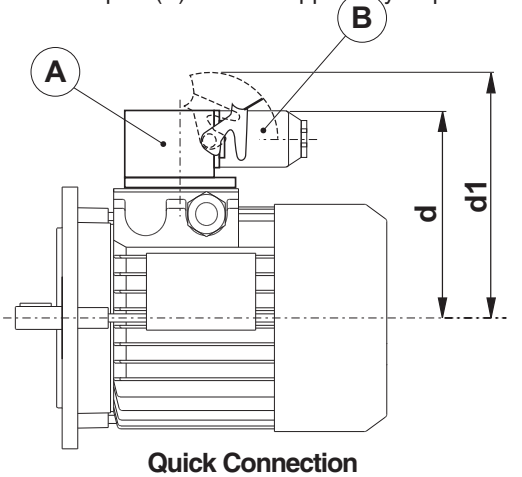

Quick Connection

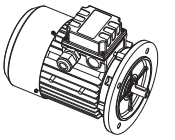

Connections

Terminal Board and Direction of Rotation

The connections on the terminal board and the direction of rotation conform to the requirements of the standard IEC34-8.
The direction of rotation is defined by observing the motor from the driven shaft side, not the fan side. The standard direction of rotation is clockwise. All standard motors are suitable for operation in both directions of rotation.
Connection diagrams are supplied inside the terminal board cover.
Three-phase asynchronous motors can operate counter-clockwise (opposite the standard direction) by switching the position of any two power supply leads. The motor warranty is immediately voided if the internal connections of the motor windings to the terminals on the terminal board are altered or changed in any way by the customer.
If the motor is designed for just one direction of rotation (see Backstop Device), this working direction is shown with an arrow on the fan cover.

Connections – Series T

The technical data tables of this publication refer to standard three-phase asynchronous motors insulated in class F and in continuous service S1, supplied at the nominal voltage of 266/460V and nominal frequency 60Hz. The admitted tolerance for the voltage is ±10% in accordance with the publication IEC38.
Connection diagrams are supplied inside the terminal board cover.
Conventional clockwise rotation is obtained by supplying power to the terminals U1-V1-W1. Counter-clockwise rotation is obtained by switching the position of any two power supply leads.
Special voltages are available by request (ex. motors 400/690V/50Hz for Δ/Y connections) and/or YY/Y with 9 leads (ex. 208-230/460V/60Hz for US market).
When starting the motor through the standard Δ/Y connection, please verify that the amount of torque needed to start the load is less than the starting torque value, typically about 1/3 of the nominal torque. If the starting torque value is less than the value needed to move the load, the motor will stall. In this instance, please use a higher power motor to ensure smooth operation of the application.

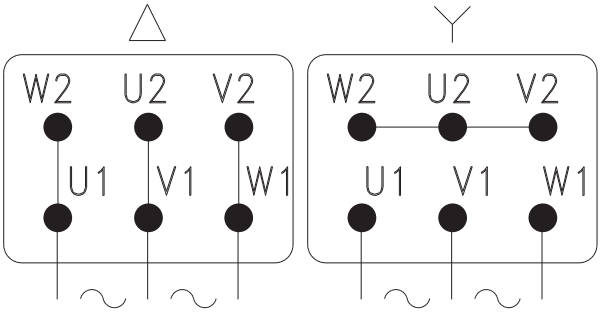

Low Voltage **High Voltage**

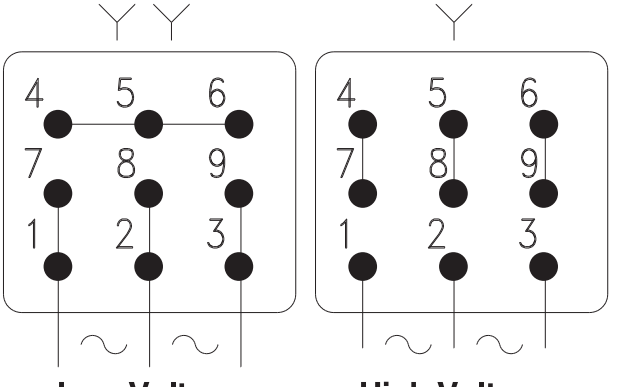

Low Voltage **High Voltage**

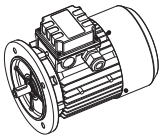

MOTOVARIO™

Brake Motors

Brake type MS

Operation

The MS brake is an AC electromagnetic, spring loaded brake that actuates when the power supply is off. When the brake is energized, the electromagnet releases pressure applied to the brake pads, allowing the motor to turn.

Power Supply

The brake is powered with 230/400V±10% Vac 50Hz, 230/460±10% Vac 60Hz. Special voltages can be supplied by request. Power supply for TB-MS brake motor series can be internally connected to the motor power supply or independently supplied through a separate terminal board. Internally connected power to the brake is supplied as standard. Please specify when ordering if the power supply needs to be independent.
Independent brake power supply for motor sizes 63, 71 and 80 requires an oversize terminal box (please refer to dimension pages).

Specifications:

- Supply voltage 230/400V±10% 50Hz, 230/460±10% Vac 60Hz
- Service S1, insulation class F
- Silent friction pads, with no asbestos, with double braking surface
- Steel brake disk attached with splined driving hub
- Steel driving hub with vibration-damping system
- Fixed braking torque in relation to the nominal motor torque (see M_B in the motor performance)

By Request:

- Manual release lever with automatic return and removable hand lever. Useful for manual operation in case of voltage drop, power failure or during installation. Hand lever is parallel to the terminal box cover. Lever can be supplied in different positions depending on the application and by request. A small block can be supplied to keep the lever in release position during operation.
- Protection kit (cover + O-ring) can be supplied to prevent contamination from the surrounding environment and dust produced by friction pad wear.
- Drive shaft extension manufactured with hexagonal hole set (opposite of driven side) for manual rotation through right hexagonal key (6mm key IEC 63-90, 8mm IEC 100-112, 10mm key IEC 132, 12mm key IEC 160).
- Inox steel ring between motor shield and brake disk with anti-corrosion brake protection and treatments. For harsh environment applications (i.e. outdoor installations).
- Braking torque adjustable from 35% to 100% of M_{Bmax} through adjusting screws set into the brake body.
- Micro-switch to verify brake release and block.

Connections

Alternate current brake

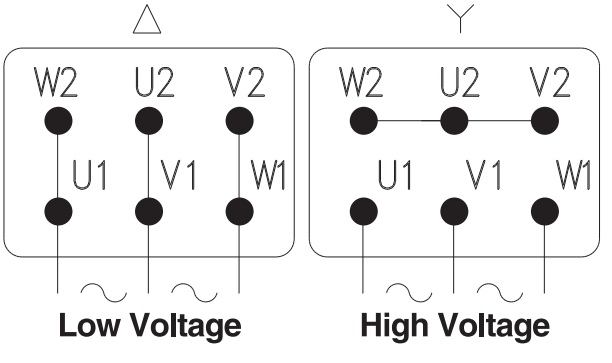

1. When the MS brake is directly connected to the motor power supply, supply cables of the brake are in parallel with those of the motor and set in the same terminal board. The brake coil is automatically energized and the brake is released when power is supplied to the motor.
   When power to the motor is interrupted, the brake coil is automatically de-energized and the brake is set. During this phase, the braking response time t_2 must be added to delay R, generated by the inertia of the load and by the energy accumulated by the motor. R changes in every motor size. The value of R depends on the load characteristics and cannot be calculated prior to determining the application parameters.
2. When the MS brake has an independent power supply, power is supplied through a separate terminal board. Brake release time t_1 and brake response time t_2 depend only on the brake characteristics.
3. Please contact Motovario for standard t_1 and t_2 values.

Brake Motors

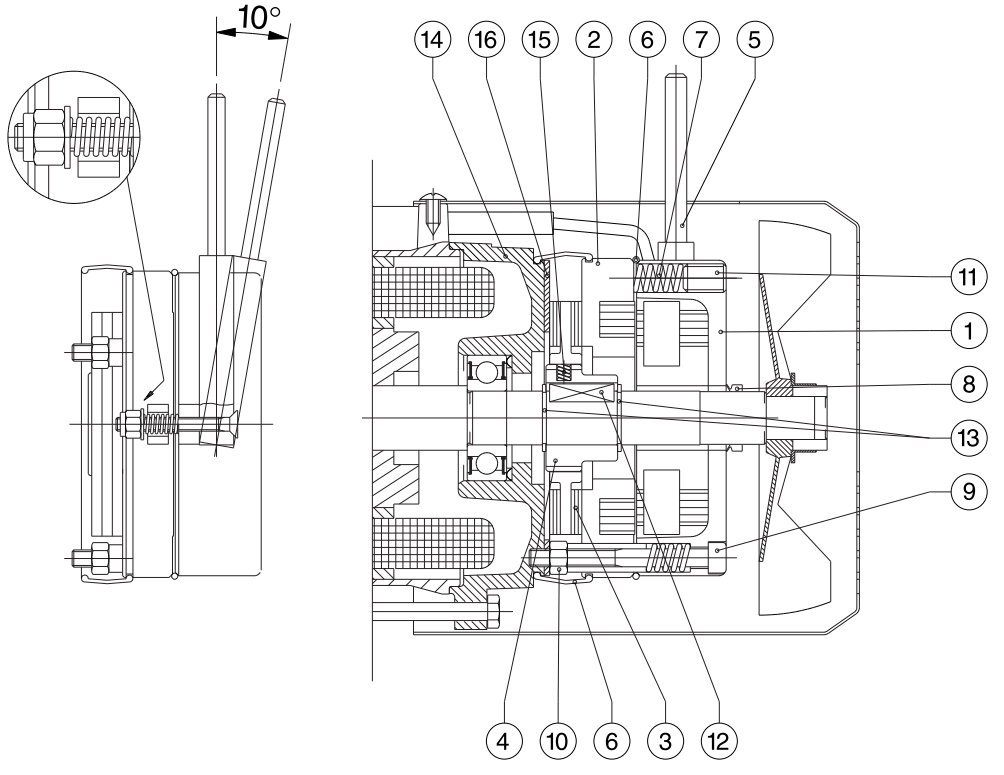

1. MAGNET BODY
2. MOBILE COIL
3. BRAKE PADS
4. DRIVING HUB
5. RELEASE LEVER (BY REQUEST)
6. PROTECTION COVER (BY REQUEST)
7. THRUST SPRINGS
8. V-RING (BY REQUEST– COMBINED WITH PROTECTION COVER)
9. FIXING SCREWS
10. LOCKING NUTS
11. ADJUSTING SCREWS FOR BRAKING TORQUE (BY REQUEST)
12. KEY
13. CIRCLIP
14. CAST IRON END SHIELD
15. VIBRATION DAMPING SPRING
16. STAINLESS STEEL DISK (BY REQUEST)

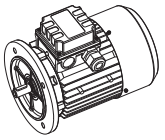

Brake Motors

Brake Type FM

Operation

The FM brake is a DC electromagnetic, spring loaded brake that actuates when the power supply is off. When the brake is energized, the electromagnet releases pressure applied to the brake pads, allowing the motor to turn.

Specifications:

- Power supply 230V±10% 50/60Hz or 400V±10% 50/60Hz
- Service S1, insulation class F
- Silent friction pads, with no asbestos, with double braking surface
- Steel brake disk attached with splined driving hub
- Steel driving hub with vibration-damping system
- Fixed braking torque in relation to the nominal motor torque (see M_B in the motor performance)

By Request:

- Manual release lever with automatic return and removable hand lever. Useful for manual operation in case of voltage drop, power failure or during installation. Hand lever is parallel to the terminal box cover. Lever can be supplied in different positions depending on the application and by request. A small block can be supplied to keep the lever in release position during operation.
- Protection kit (cover + O-ring) can be supplied to prevent contamination from the surrounding environment and dust produced by friction pad wear.
- Drive shaft extension manufactured with hexagonal hole set (opposite of driven side) for manual rotation through right hexagonal key (6mm key IEC 63-90, 8mm IEC 100-112, 10mm key IEC 132, 12mm key IEC 160).
- Inox steel ring between motor shield and brake disk with anti-corrosion brake protection and treatments. For harsh environment applications (i.e. outdoor installations).
- Braking torque adjustable from 35% to 100% of M_{Bmax} through adjusting screws set into the brake body.
- Micro-switch to verify brake release and block.
- Flywheel for starting and progressive braking.

Power Supply

The brake is powered with direct current by rectifying the input alternate current voltage:

- For brake motors TB-FM series, standard input voltage is 230Vac rectified via half-wave rectifier bridge for 103Vdc output voltage. A full-wave rectifier bridge can be supplied for 208Vdc output voltage. The brake power is supplied through an internal connection to the motor terminal block as standard. The brake can have an independent power supply, by request. Please specify the brake voltage when ordering an independent power supply.
- Special voltages available by request, starting from 12Vdc.

Possible rectifiers:

- Half-wave rectifier – standard action RV6 (standard in all Motovario TB-FM brakemotors to size IEC 132)
- Half-wave rectifier – standard action low noise NBR (by request to size IEC 132)
- Half-wave rectifier – quick action SBR (by request to size IEC 132, standard for sizes IEC 160-180-200). Quick release action provided by supplying the brake in the release phase with full-wave voltage instead of half-wave voltage, producing action times between NBR or RV6 rectifier action times and alternate current brake action times. Suitable for applications with high number of cycles where AC brakes are not feasible.
- Full-wave rectifier - standard detachment DBR (by request to size IEC132). DBR can be used on sizes IEC 160-180-200 for short cycles with intermittent service lower than 50%.

To house the rectifier, TB-FM motors size IEC 63, 71 and 80 require a larger-than-standard terminal box. Motors without a rectifier (24Vdc brake) or with RV6 rectifier use standard size terminal boxes.

All rectifiers conform to Low-Voltage Directive 73/23/CEE. Conformity to EMC Directive (electromagnetic compatibility) 89/336/CEE and its subsequent amendments is achieved by using a low noise rectifier (NBR) in the unit rectifier-brake coil. To filter electrical noise when the DC brake is supplied with half-wave quick action rectifier (SBR) or full-wave rectifier (DBR), connect a 440Vac 0.22μF class X2 capacitor in parallel to the AC power supply in accordance with EN132400. RV6 half-wave rectifier does not have a noise filter and is suitable only when the noise filter is built into the application by the customer.

Starting and Progressive Braking

TB-FM brake motors can be equipped with a steel hub between the brake and fan, acting as a flywheel to increase the moment of inertia of the system. The flywheel allows softer, more progressive starting and braking for smoother action by adding mass to the motor rotation. The added mass gives the motor a higher moment of inertia, extending the time of action when braking torque is applied. The overall length of the brake motor does not change from standard when it is supplied with a flywheel.

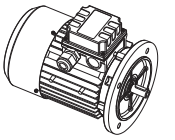

Brake Motors

Connections
Direct Current Brake

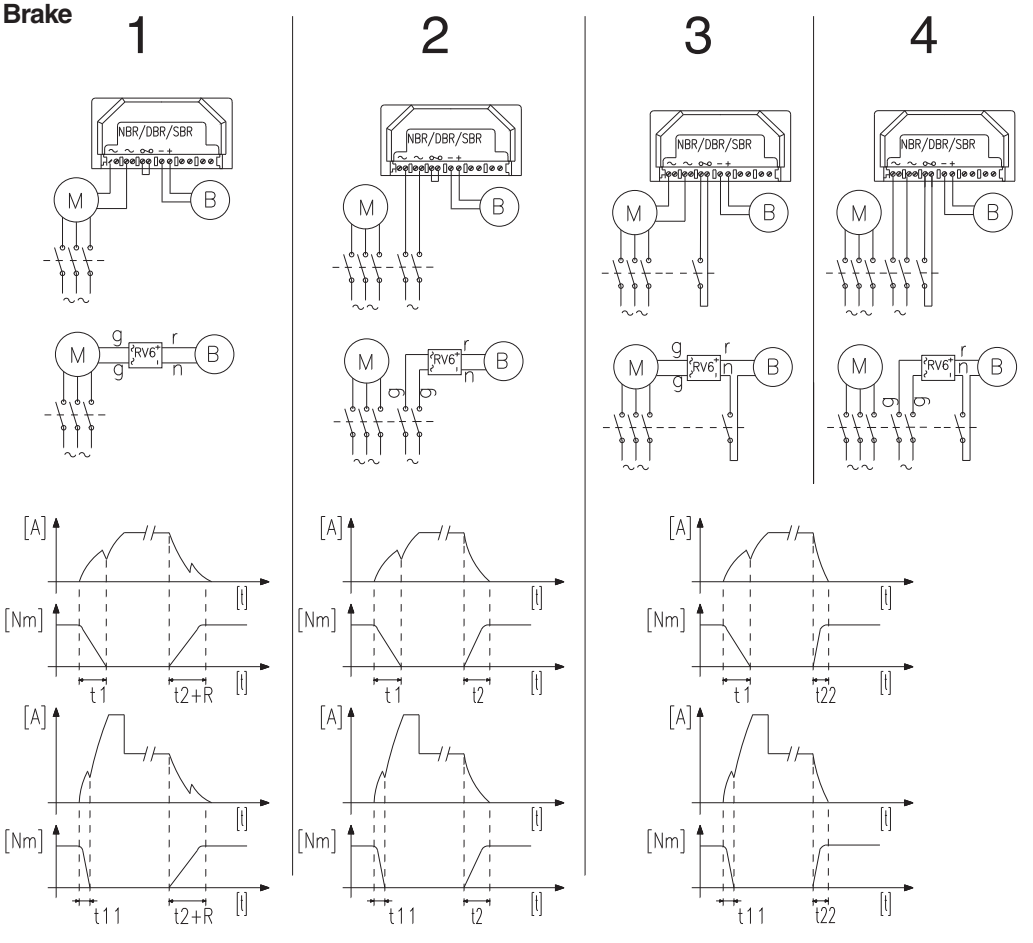

1. When the FM brake is directly connected to the motor power supply, supply cables on the AC side of the rectifier are in parallel with one phase of the motor and set in the same terminal board. The brake coil is automatically energized and the brake is released when power is supplied to the motor.
   When power to the motor is interrupted, the brake coil is automatically de-energized and the brake is set. During this phase, the braking response time t_2 must be added to delay R, generated by the inertia of the load and by the energy accumulated by the motor. R changes in every motor size. The value of R depends on the load characteristics and cannot be calculated prior to determining the application parameters.
2. When the FM brake has an independent AC power supply, power to the brake is supplied through power leads separate from the motor power leads. The AC leads of an RV6 rectifier are connected in a fly terminal board mammuth type. NBR, DBR or SBR rectifiers are equipped with AC power supply leads. Braking response time t_2 does not depend on the characteristics of both the motor and load.
3. Faster braking action can be achieved when the FM brake is directly connected to the motor's AC power supply. A switch connected to the rectifier can interrupt brake power on the continuous current side, between the motor terminals and the rectifier. Therefore, the response time of the brake does not depend on the characteristics of the motor and load, but only on the brake characteristics ($t_{22} < t_2$).
4. Faster braking action can be achieved when the FM brake has an independent AC power supply. A switch connected to the rectifier can interrupt brake power on the continuous current side, between the input power and the rectifier ($t_{22} < t_2$).

When the brake has an independent power supply, as in diagrams two (2) and four (4), rectifier life is extended. AC current from the motor windings cannot pass into the rectifier bridge, thus extending rectifier life.
Direct DC power can be supplied to the brake by request. A direct DC power supply (i.e. 24Vdc) does not require a rectifier, but does require an independent fly terminal board mammuth type. Brake power supply cables are set inside the terminal box and connected to the secondary terminal board. Time of action is the same as in diagram four (4).
If the RV6 rectifier is set with leads for configurations three (3) or four (4) (direct current side), the connection is set by the customer.

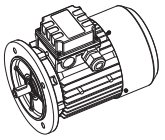

MOTOVARIO™

Brake Motors

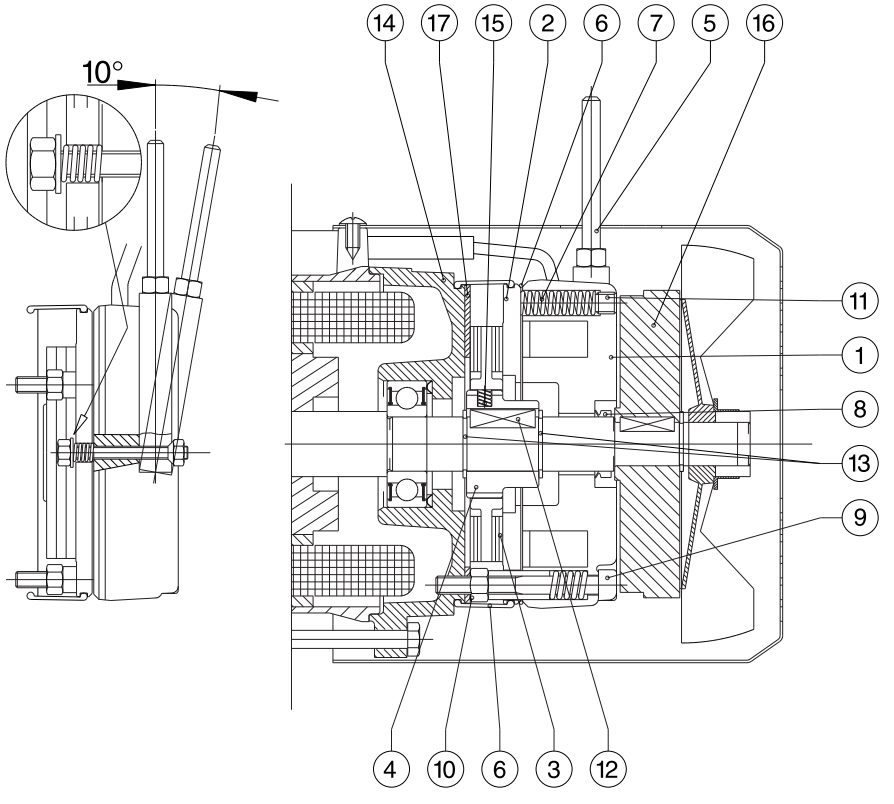

1. MAGNET BODY
2. MOBILE COIL
3. BRAKE PADS
4. DRIVING HUB
5. RELEASE LEVER (BY REQUEST)
6. PROTECTION COVER (BY REQUEST)
7. THRUST SPRINGS
8. V-RING (BY REQUEST– COMBINED WITH PROTECTION COVER)
9. FIXING SCREWS
10. LOCKING NUTS
11. ADJUSTING SCREWS FOR BRAKING TORQUE (BY REQUEST)
12. KEY
13. CIRCLIP
14. CAST IRON END SHIELD
15. VIBRATION DAMPING SPRING
16. FLYWHEEL (BY REQUEST)
17. STAINLESS STEEL DISK (BY REQUEST)

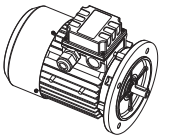

Nameplates

MOTOVARIO S.p.A SPEZZANO (MO) ITALY
IEC38
IEC34-1
Nr. 032752
98 55008
3~mot. TB80B4 Brake 15 Nm 103VDC
I.Cl. F Tmax. 40°C IP55 S3 30% IMB14
TROP1 - IC411

V ±10%	Hz	kW	min⁻¹	cosφ	A
Δ 230	50	0.75	1420	0.78	3.5
Y 400	50	0.75	1420	0.78	2.0
Δ 230	60	0.75	1710	0.80	3.5
Y 460	60	0.90	1710	0.80	2.0

A05970

Standard Nameplate

MOTOVARIO S.p.A ITALY
Nr. 57324
2003 0002
3~mot. T80A4 FRAME IMB 14 DES C
40°C Amb Rating CONT. CLASS F CODE P
TEFC-S-

V	Hz	hp	rpm	P.F.	A
Δ 208	60	3/4	1720	79%	2.60
Δ 230	60	3/4	1730	73%	2.60
Y 460	60	3/4	1750	61%	1.60

www.motovario.it
A05970

UL/CSA Nameplate

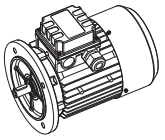

MOTOVARIO™

AC Motor Ratings, 60Hz

2 Poles

IEC Frame	Model	HP	KW	Voltage	RPM 230V	F.L. Amps 230V	% F.L. Eff. 230V	RPM 460V	F.L. Amps 460V	% F.L. Eff. 460V	Braking Torque ft-lbs
63	63A	0.25	0.18	230/460	3320	1.08	50.5	3410	0.60	50.8	1.3
63	63B	0.33	0.25	230/460	3320	1.25	57.1	3410	0.68	58.3	1.3
63	63C	0.50	0.37	230/460	3320	1.7	63.3	3410	0.95	63.9	2.6
71	71A	0.50	0.37	230/460	3440	1.6	72.3	3490	0.95	69.1	3.7
71	71B	0.75	0.55	230/460	3420	2.3	73.4	3470	1.3	72.2	3.7
71	71C	1.00	0.75	230/460	3420	3.0	74.9	3470	1.7	73.6	5.5
80	80A	1.00	0.75	230/460	3400	3.2	68.1	3460	1.7	71.5	7.4
80	80B	1.5	1.1	230/460	3440	4.3	73.1	3490	2.3	73.2	11
80	80C	2.0	1.5	230/460	3440	5.6	76.5	3490	3.0	76.7	11
90S	90S	2.0	1.5	230/460	3390	5.9	72.2	3460	3.1	74.7	11
90L	90L	3.0	2.2	230/460	3440	8.3	75.6	3490	4.3	77.1	19
100	100LA	4.0	3.0	230/460	3480	11.2	76.8	3500	5.7	77.9	30
100	100LB	5.5	4	230/460	3470	14,2	77.4	3490	7,5	78.2	30
112	112M	5.5	4	230/460	3450	14.2	76.5	3500	7.5	76.9	30
112	112MS	7.5	5.5	230/460	3500	19.0	81.6	3520	10.5	81.4	44
132S	132SA	7.5	5.5	230/460	3490	20.1	78.2	3520	10.7	77.8	55
132S	132SB	10	7.5	230/460	3490	27.0	78.5	3520	14.1	78.9	55
132L	132L	12	9.2	230/460	3500	31.2	82.5	3530	17.4	82.0	74
132L	132M	15	11	230/460	3490	38.5	82.8	3510	20.9	82.8	111

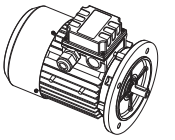

4 Poles

IEC Frame	Model	HP	KW	Voltage	RPM 230V	F.L. Amps 230V	% F.L. Eff. 230V	RPM 460V	F.L. Amps 460V	% F.L. Eff. 460V	Braking Torque ft-lbs
63	63A	0.16	0.12	230/460	1650	0,83	51.4	1690	0,52	49.4	1.3
63	63B	0.25	0.18	230/460	1650	1.10	56.9	1690	0.65	56.5	2.6
63	63C	0.30	0.22	230/460	1660	1.30	66.2	1700	0,81	62.8	2.6
71	71A	0.33	0.25	230/460	1700	1.15	71.2	1730	0.65	69.0	3.7
71	71B	0.50	0.37	230/460	1700	1.70	70.1	1730	0.95	69.6	5.5
71	71C	0.75	0.55	230/460	1680	2.50	68.9	1710	1.35	69.4	5.5
80	80A	0.75	0.55	230/460	1710	2.45	72.6	1740	1.35	72.2	7.4
80	80B	1.00	0.75	230/460	1700	3.1	71.9	1750	1.8	70.8	11
80	80C	1.20	0.92	230/460	1710	4.0	75.1	1750	2.2	73.1	11
90S	90S	1.5	1.1	230/460	1670	4.4	75.5	1720	2.3	76.7	11
90L	90L	2.0	1.5	230/460	1700	5.7	76.5	1720	3.1	77.3	19
90L	90LL	2.5	1.84	230/460	1670	7.5	76.5	1730	4.1	76.7	30
100	100LA	3.0	2.2	230/460	1710	8.9	76.0	1740	4.7	77.9	30
100	100LB	4.0	3.0	230/460	1720	11.1	81.8	1740	6.0	82.1	41
112	112M	5.5	4	230/460	1730	14.7	81.6	1750	8.1	82.5	44
112	112MS	6.4	4.8	230/460	1710	17.5	82.3	1740	9.2	83.3	44
132S	132S	7.5	5.5	230/460	1740	20.5	83.7	1760	11.2	84.0	74
132L	132L	10	7.5	230/460	1740	27.4	84.8	1760	15.0	85.3	111
132L	132M	12	9.2	230/460	1720	32.4	82.6	1750	17.5	85.0	111

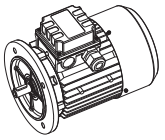

MOTOVARIO™

AC Motor Ratings, 60Hz

6 Poles

IEC Frame	Model	HP	KW	Voltage	RPM 230V	F.L. Amps 230V	% F.L. Eff. 230V	RPM 460V	F.L. Amps 460V	% F.L. Eff. 460V	Braking Torque ft-lbs
63	63A	0.12	0.09	230/460	1120	0.82	46.5	1150	0.57	41.3	2.6
63	63B	0.16	0.12	230/460	1110	0.90	60.6	1140	0.60	51.9	2.6
63	63C	0.20	0.15	230/460	1100	1.15	54.5	1130	0.80	47.0	2.6
71	71A	0.25	0.18	230/460	1110	1.00	66.0	1140	0,60	61.6	3.7
71	71B	0.33	0.25	230/460	1120	1.35	65.0	1150	0,77	64.2	5.5
71	71C	0.50	0.37	230/460	1080	1.9	64.0	1120	1.1	64.0	5.5
80	80A	0.50	0.37	230/460	1120	2.2	70.0	1140	1.2	70.4	7.4
80	80B	0.75	0.55	230/460	1120	2.6	73.2	1140	1.5	73.8	11
80	80C	1.00	0.75	230/460	1070	3.5	67.4	1110	1.9	68.8	11
90S	90S	1.00	0.75	230/460	1100	3.6	70.6	1130	2.0	72.5	11
90L	90L	1.5	1.10	230/460	1100	5.2	76.5	1130	2.9	78.6	19
100	100LA	2.0	1.50	230/460	1100	6.3	74.5	1130	3.3	78.4	30
100	100LB	2.5	1.84	230/460	1130	7.5	75.0	1150	4.2	79.0	30
112	112M	3.0	2.2	230/460	1130	10.0	73.4	1150	5.4	73.9	44
112	112MS	4.0	3.0	230/460	1130	11.9	78.3	1150	6.5	79.2	44
132S	132S	4.0	3.0	230/460	1150	12.3	74.8	1160	6.7	75.7	55
132L	132L	5.5	4	230/460	1160	16.5	79.0	1170	9.2	79.5	74
132L	132M	7.5	5.5	230/460	1150	21.7	78.9	1160	11.8	79.9	111

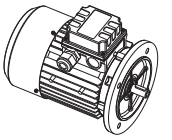

8 Poles

IEC Frame	Model	HP	KW	Voltage	RPM 230V	F.L. Amps 230V	% F.L. Eff. 230V	RPM 460V	F.L. Amps 460V	% F.L. Eff. 460V	Braking Torque ft-lbs
63	63C	0.10	0.075	230/460	780	0.71	43.3	820	0.45	42.5	1.3
71	71A	0.12	0.09	230/460	815	0.74	50.9	840	0.46	47.0	1.8
71	71B	0.16	0.12	230/460	830	0.90	51.2	850	0.55	47.3	3.7
80	80A	0.25	0.18	230/460	840	1.32	54.7	850	0.83	50.9	3.7
80	80B	0.33	0.25	230/460	840	1.70	59.2	860	1.00	56.8	7.4
80	80C	0.50	0.37	230/460	810	2.1	62.2	840	1.25	61.9	7.4
90S	90S	0.50	0.37	230/460	820	2.3	65.8	830	1.35	64.3	7.4
90L	90L	0.75	0.55	230/460	810	3.4	62.5	820	2.0	60.9	10
100	100LA	1.00	0.75	230/460	840	4.2	70.2	850	2.5	66.4	19
100	100LB	1.5	1.1	230/460	830	5.6	71.5	840	3.1	71.5	30
112	112M	2.0	1.5	230/460	850	6.8	78.1	870	3.9	78.6	44
132S	132S	3.0	2.2	230/460	850	9.9	78.8	870	5.4	79.8	55
132L	132L	4.0	3.0	230/460	860	14.5	77.4	870	7.8	78.4	111

063 AC Motor Dimensions

B5

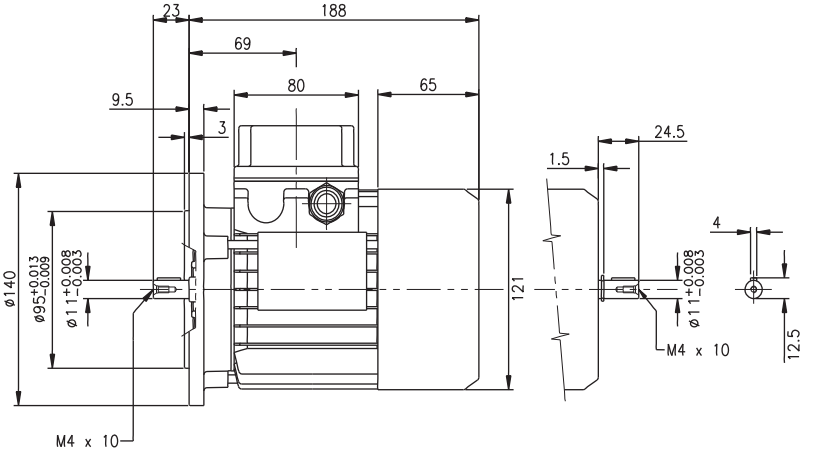

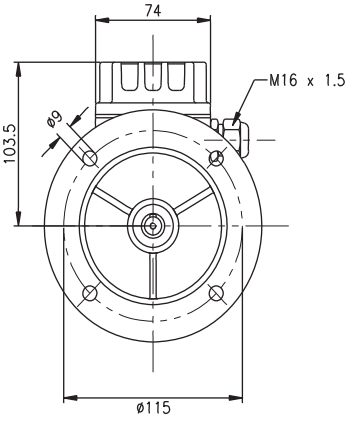

B14

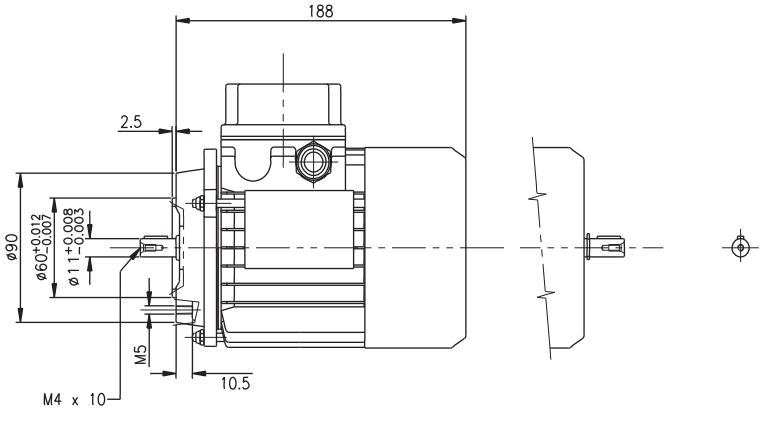

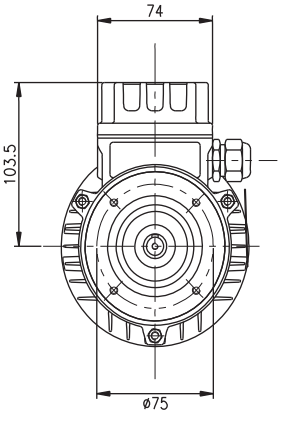

Brake Motor

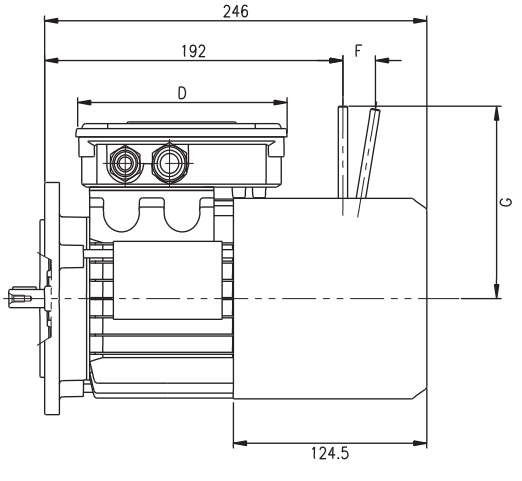

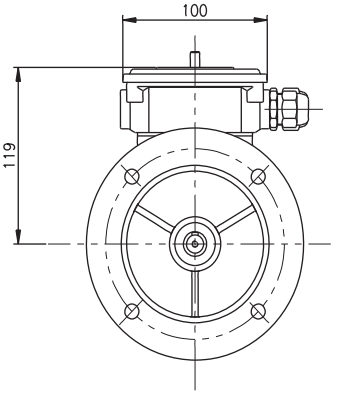

	D	F	G
MS Brake	150mm	21mm	116mm
FM Brake	150mm	17.5mm	96mm

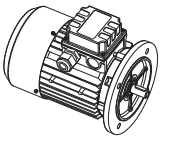

B5

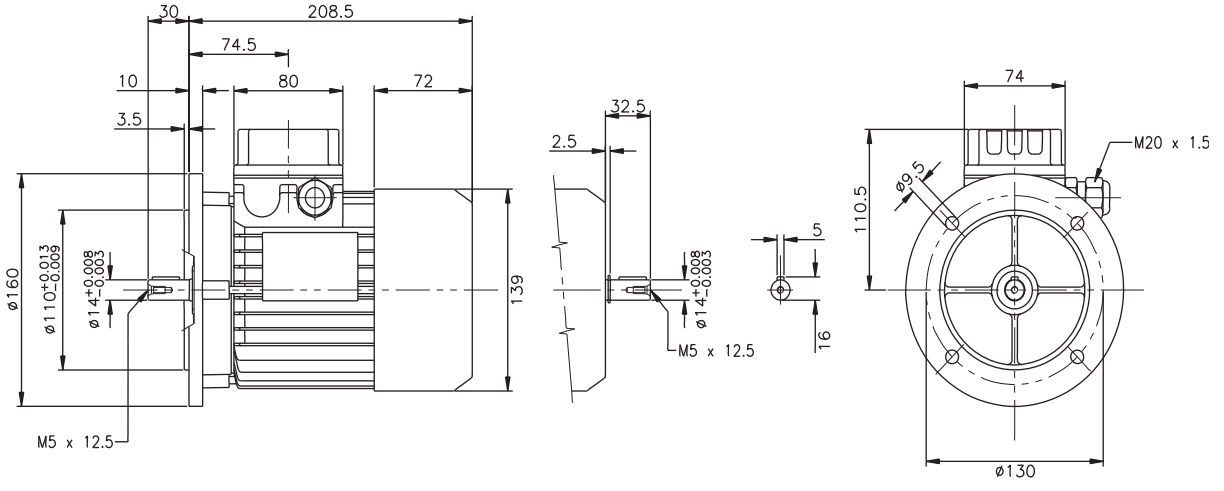

B14

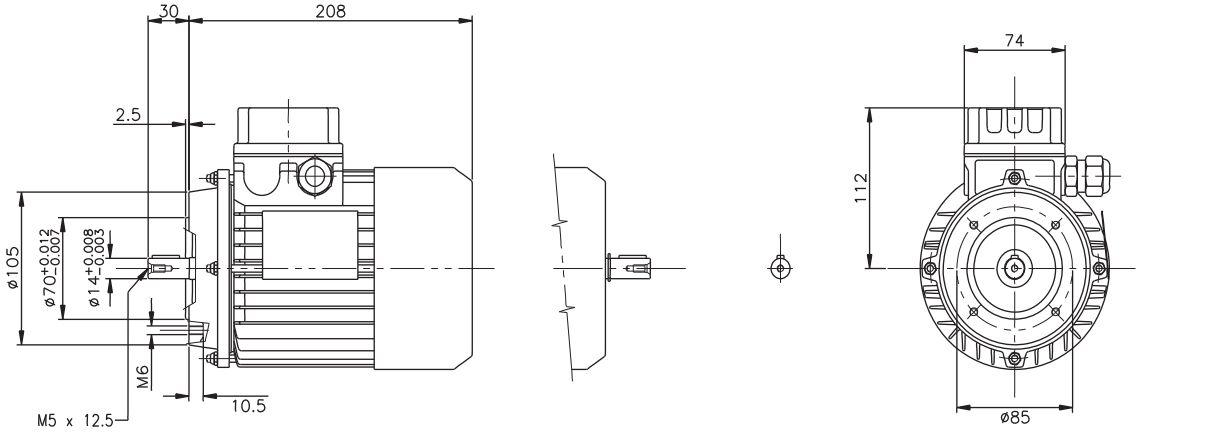

Brake Motor

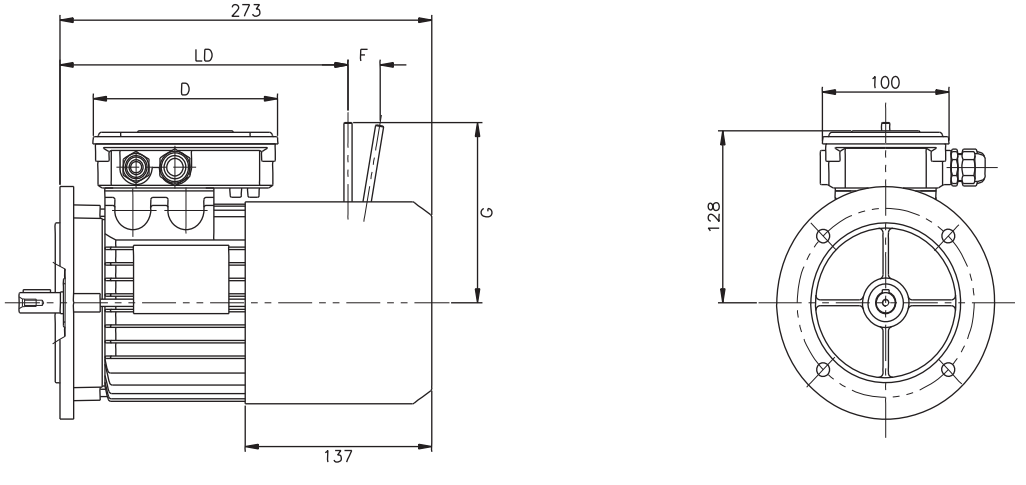

	D	LD	F	G
MS Brake	150mm	211.5mm	23mm	124mm
FM Brake	150mm	214mm	19mm	101.5mm

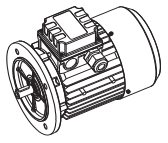

MOTOVARIO™

080 AC Motor Dimensions

B5

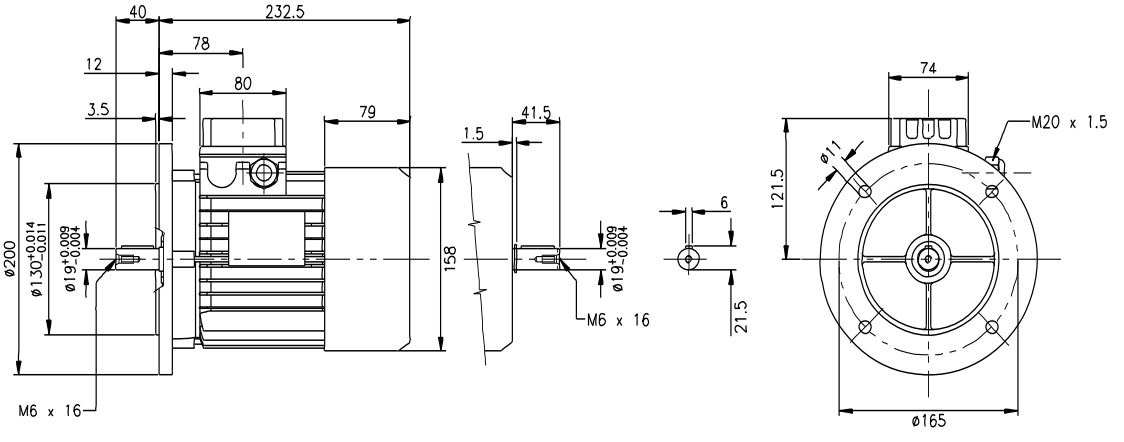

B14

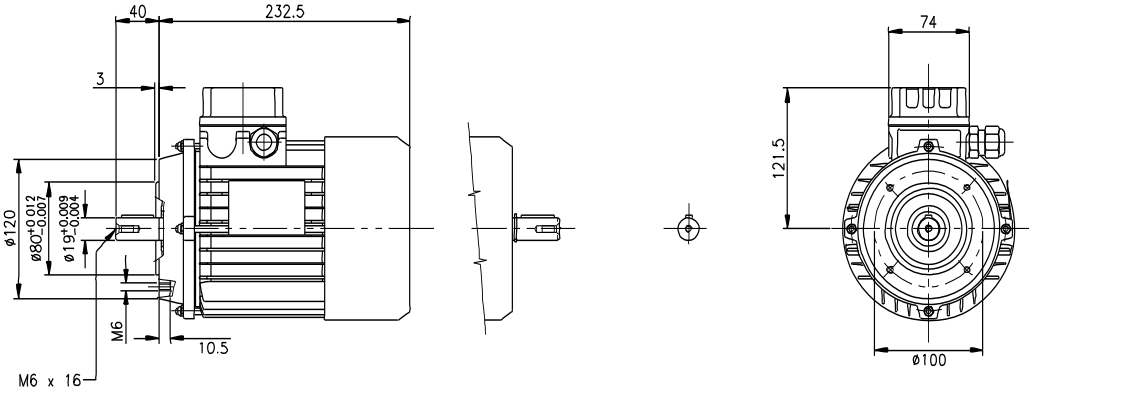

Brake Motor

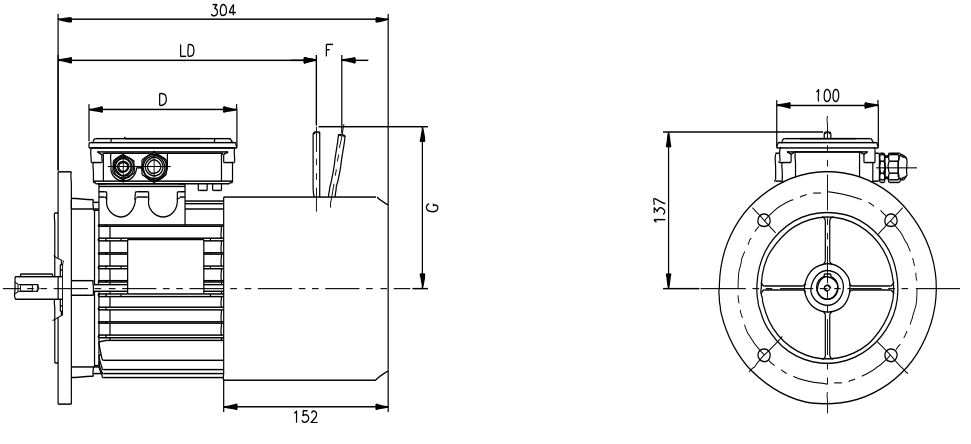

	D	LD	F	G
MS Brake	150mm	238mm	23mm	134mm
FM Brake	150mm	237mm	22.5mm	129mm

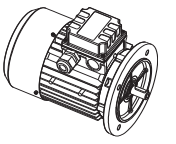

B5

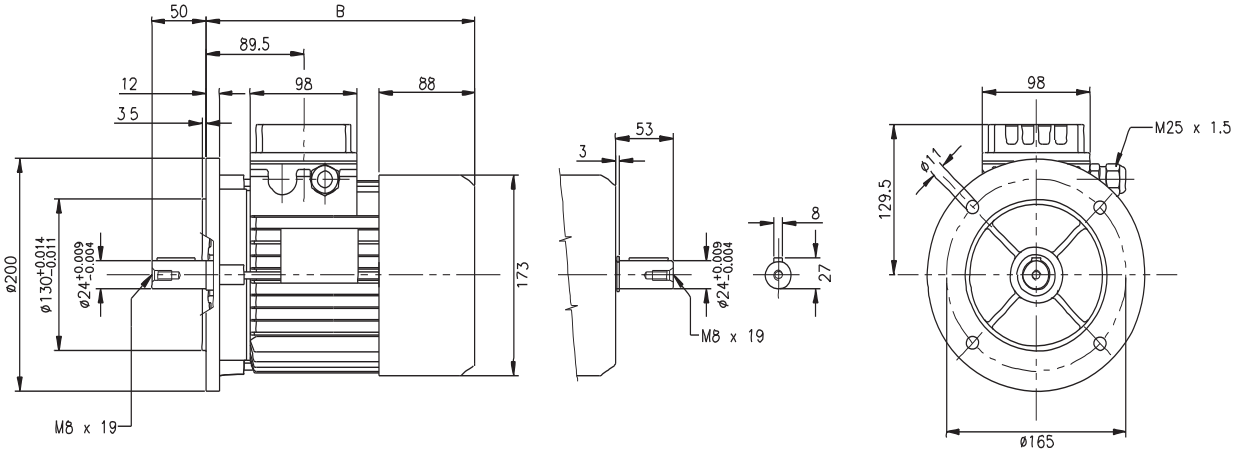

B14

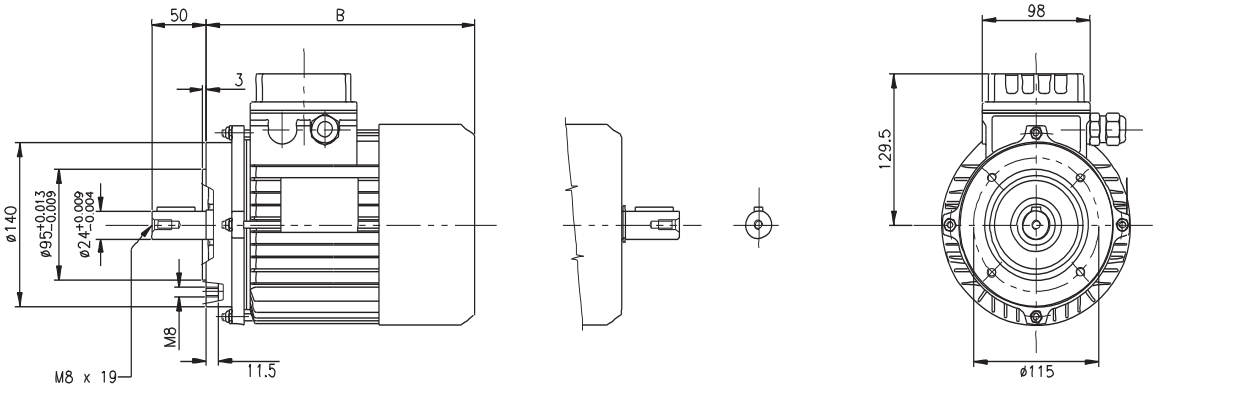

Brake Motor

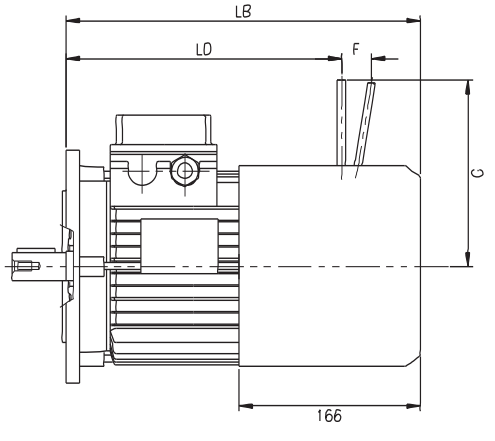

	B		LB	LD	F	G
90S	246.5mm	MS Brake	324.5mm	252.5mm	27.5mm	160mm
	246.5mm	FM Brake	324.5mm	255mm	28mm	159.5mm
90L	271.5mm	MS Brake	349.5mm	279mm	28mm	160mm
	271.5mm	FM Brake	349.5mm	279mm	27.5mm	159.5mm

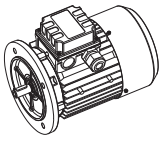

MOTOVARIO™

100 AC Motor Dimensions

B5

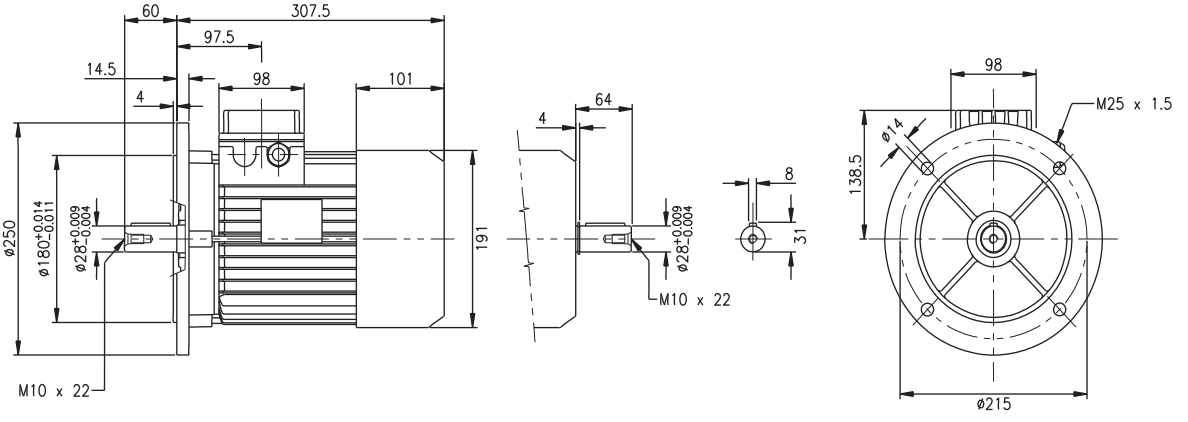

B14

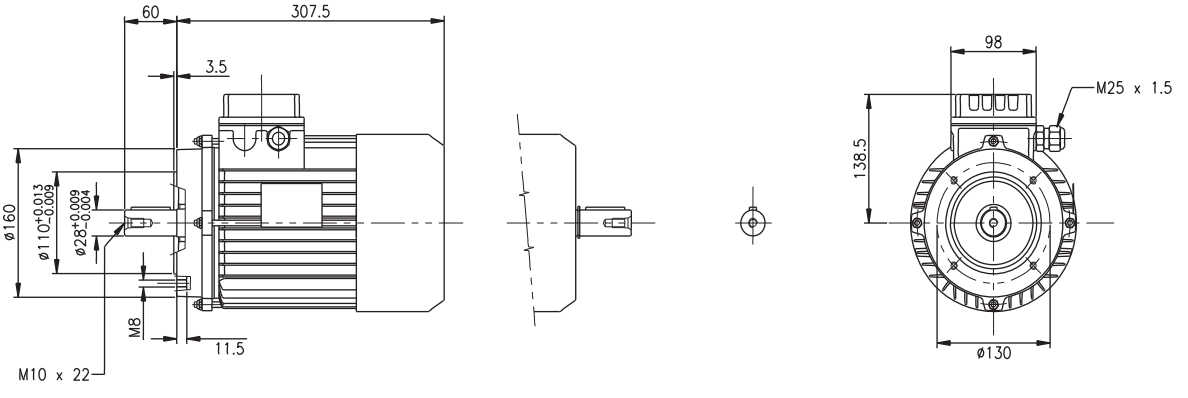

Brake Motor

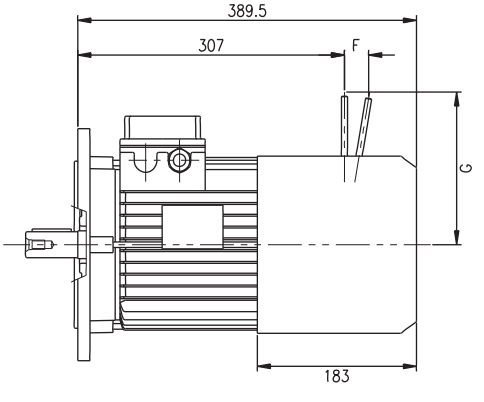

	F	G
MS Brake	28mm	160mm
FM Brake	27.5mm	159.5mm

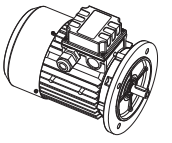

B5

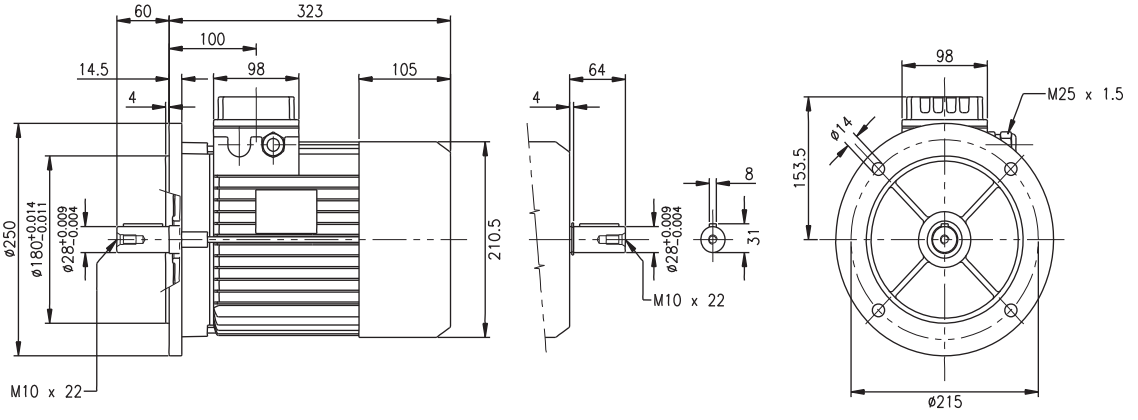

B14

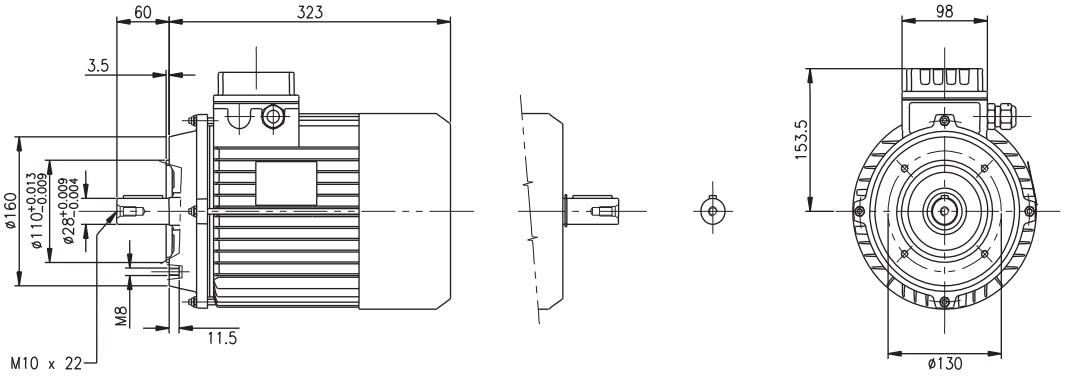

Brake Motor

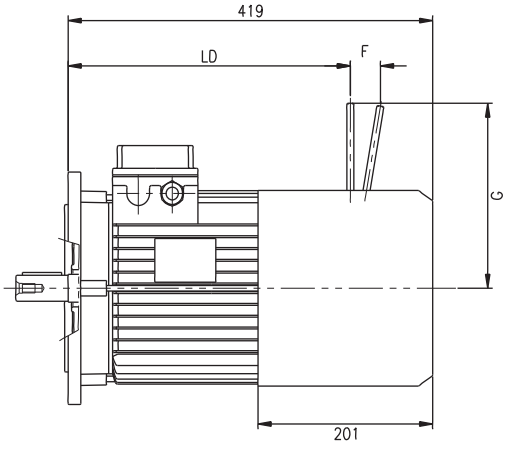

	LD	F	G
MS Brake	330mm	34.5mm	198mm
FM Brake	326mm	35mm	199mm

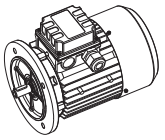

MOTOVARIO™

132 AC Motor Dimensions

B5

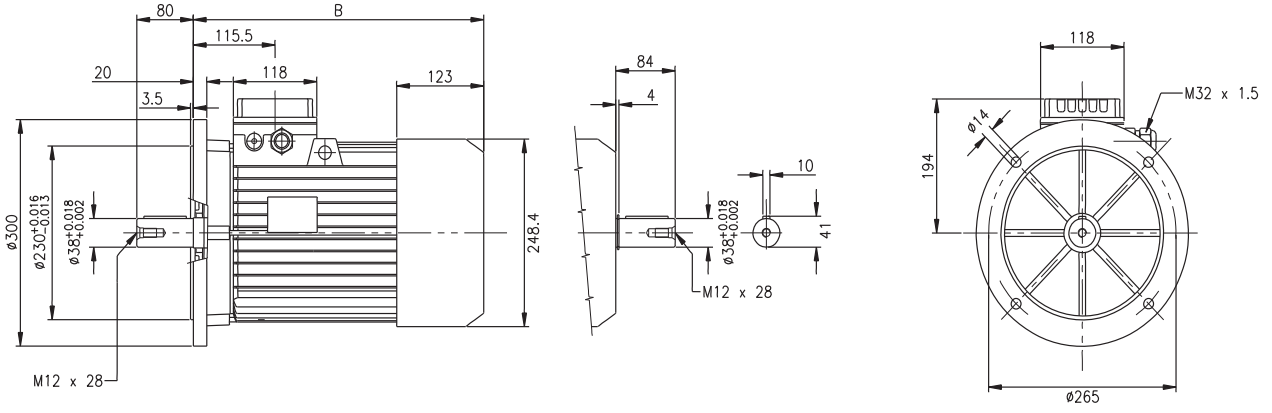

B14

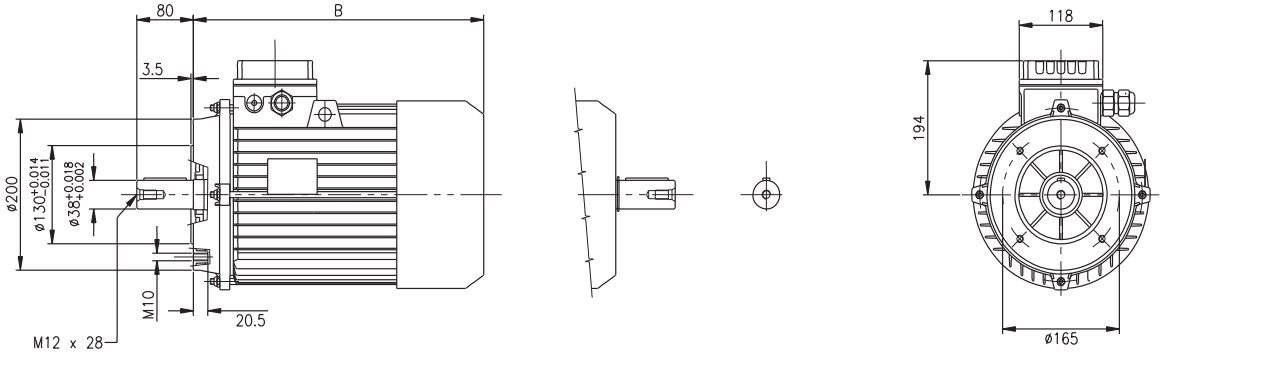

Brake Motor

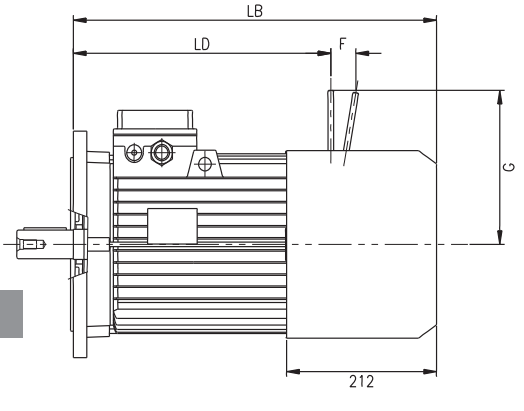

	B		LB	LD	F	G
132S	372.5mm	MS Brake	461.5mm	364mm	34.5mm	200mm
	372.5mm	FM Brake	461.5mm	359mm	35.5mm	204mm
132L/M	410.5mm	MS Brake	513.5mm	404.5mm	37.5mm	217mm
	410.5mm	FM Brake	513.5mm	403.5mm	39mm	226mm

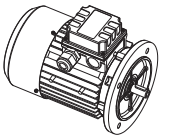

Notes

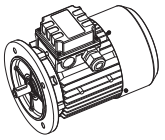

MOTOVARIO™

Notes

Service Factor

The AGMA Classification of service factor depends on the conditions under which the gear reducer operates. Motovario reducers can be rated for operation using the AGMA standards of service, based on AGMA Standard 6019-E89.

Class I
Reducer Service Factor ≥ 1.0
Steady loads not exceeding normal rating and 8-10 hours continuous running time per day.

Class II
Reducer Service Factor ≥ 1.4
Moderate shock loads not exceeding 1.25 x rated load torque and 8-10 hours continuous running time per day.

Class III
Reducer Service Factor ≥ 2.0
Heavy shock loads exceeding 1.25 x rated load torque and 8-10 hours running time per day.

Maximum duration of shock is 15 seconds. If shocks are likely to last longer than 15 seconds, please contact Motovario technical service representatives for additional support.

Consider ambient temperature when choosing a gear reducer. The service factor determined according to AGMA classification must be corrected for temperature:

Ambient Temperature	**Multiply Service Factor by**
86-104°F	1.1 - 1.2
104-122°F	1.3 - 1.4
122-140°F	1.5 - 1.6
above 140°F	contact Motovario for technical assistance

The load classification can also be determined by the following chart:

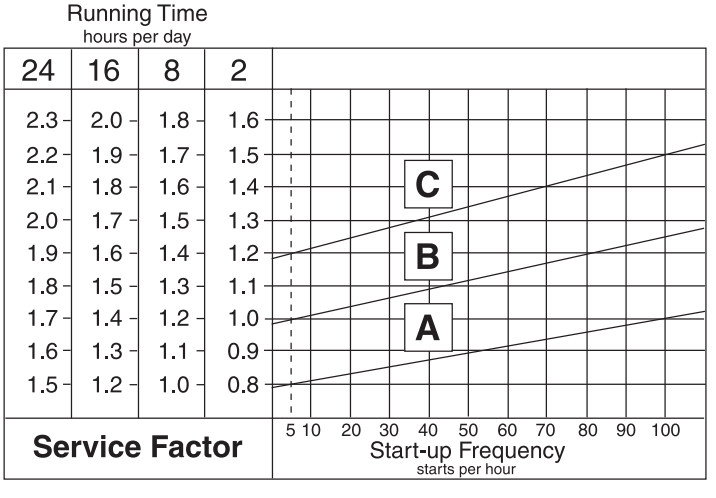

Type of load of the operated machine

A – Uniform Load – fa ≤ 0.3
Screw feeders for light materials, fans, assembly lines, conveyor belts for light materials, small mixers, lifts, cleaning machines, fillers, control machines.

B – Moderate Shocks – fa ≤ 3
Winding devices, woodworking machine feeders, goods lifts, balancers, threading machines, medium mixers, conveyor belts for heavy materials, winches, sliding doors, fertilizer scrapers, packing machines, concrete mixers, crane mechanisms, milling cutters, folding machines, gear pumps.

C – Heavy Shocks – fa ≤ 10
Mixers for heavy materials, shears, presses, centrifuges, rotating supports, winches and lifts for heavy materials, grinding lathes, stone mills, bucket elevators, drilling machines, hammer mills, cam presses, folding machines, turntables, tumbling barrels, vibrators, shredders.

fa is defined as: **fa = Je/Jm**
where Je (lb-in^2) is the moment of low-speed external inertia at the drive-shaft
and Jm (lb-in^2) is the moment of inertia of the motor
If fa > 10, please contact Motovario for technical assistance.

Applications

Critical Applications

Performance ratings correspond to mounting position B3 or similar, i.e. when the first stage is not entirely immersed in oil. For other mounting positions and/or particular input speeds, refer to the tables that highlight different critical situations for each size reducer.

It is also necessary to consider the following applications by contacting MotovarioTechnical Service:

- Use as a speed increaser
- Use that could be hazardous for people if the reducer fails
- Applications with high inertia
- Use as a lifting winch
- Applications with high dynamic strain on the housing of the reducer
- In places with ambient temperatures below 23°F or over 104°F.
- Use in chemically aggressive or caustic environments
- Use in salty environments
- Use in radioactive environments
- Use in environments with pressures other than standard atmospheric pressure
- Mounting positions not described in this catalog

Avoid applications where even partial immersion in water of the reducer is required.

The maximum torque that the gear reducer can support must not exceed two times the nominal torque (when service factor = 1.0) stated in the performance tables. Maximum torque considers momentary overloads at full load start-up, braking, shocks or other causes, particularly dynamic shock.

H	A41	A51	A61	A32 A33	A42 A43	A52 A53	A62 A 63
Mounting Position: V5-V1 Input Speed: 1500-3000 RPM	-	-	-	-	-	-	-
Input Speed: >3000 RPM	M	M	M	M	M	M	M
Mounting Position: V3-V6	M	M	M	M	M	M	M

B	A42	A52 A53	A72 A73
Mounting Position: V5-V1 Input Speed: 1500-3000 RPM	-	-	-
Input Speed: >3000 RPM	M	M	M
Mounting Position: V3-V6	M	M	M
Shrink Disk Mounting Position V5-V6	M	M	M

M = Contact Motovario for Assistance

Overhung Load (OHL)

The overhung load on the shaft is calculated as:

$$Fre = \frac{2 \cdot M \cdot fz}{D} \leq Fr1 \text{ or } Fr2$$

Where:

Fre (lbs) is the resulting overhung load
M (in-lbs) is the torque on the shaft
D (in) is the pitch diameter of the transmission member mounted on the shaft
Fr (lbs) is the value of the maximum permissible overhung load (see relative tables)
fz = 1.1 gear pinion
1.4 chain wheel
1.7 v-pulley
2.5 flat pulley

When the resulting overhung load is not applied on the center line of the shaft, the overhung load on the shaft is calculated as:

$$Fre \leq \frac{Fr \cdot a}{(b + x)} \leq Fr1max \text{ or } Fr2max$$

a, b, x = values given in the tables on pages 130 and 131.

The value of the permissible overhung load (lbs) is given in the tables relating to the performance of the reducer in use. It is related to the load applied on the center line of the shaft and in the most unfavorable conditions of angle of application and direction of rotation.
The maximum admissible thrust loads are 1/5 (20%) of the value of the given overhung load when they are applied in combination with the overhung load.
The tables relating to the output shafts give the maximum permissible value.
This value must never be exceeded since it relates to the strength of the reducer housing.
Particular conditions of overhung load higher than the limits listed in this catalog may occur. In this case, call Motovario Technical Sevice and provide details on the application: (direction of the load, direction of output shaft rotation, type of service).

Overhung Load

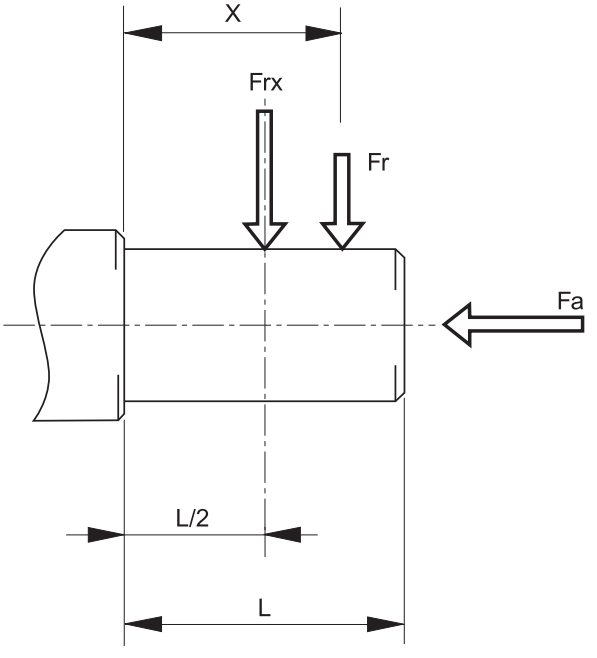

Overhung Load, Output

Maximum Permissible Output OHL

H	A41	A51	A61
a (inch)	3.19	3.27	4.06
b (inch)	2.40	2.28	2.87
Fr2 max (lbs)	247	674	1012

H	A32	A33	A42	A43	A52	A53	A62	A63
a (inch)	4.13	4.13	4.53	4.53	5.31	5.31	6.10	6.10
b (inch)	3.35	3.35	3.54	3.54	4.13	4.13	4.53	4.53
Fr2 max (lbs)	450	450	967	967	1349	1349	1798	1798

B	A42	A52	A53	A72	A73
a (inch)	4.13	4.69	4.69	5.71	5.71
b (inch)	3.35	3.70	3.70	4.53	4.53
Fr2 max Output shaft, lbs	-	-	-	2233	2233
Fr2 max Hollow bore, lbs	585	674	674	899	899

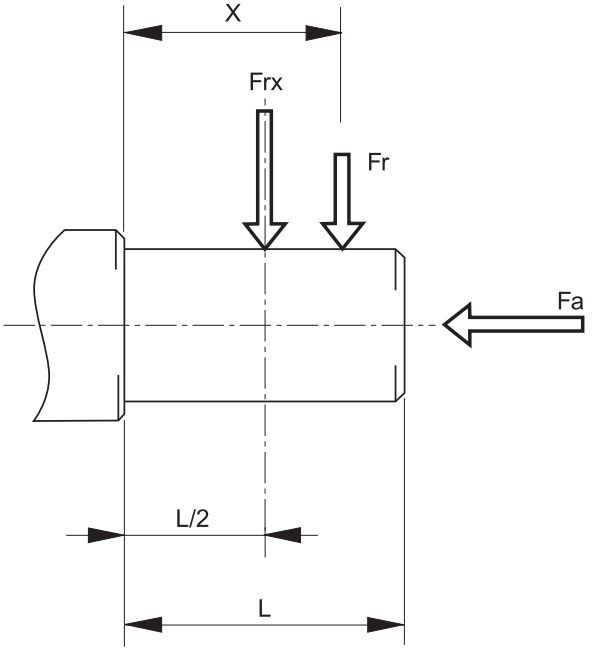

Overhung Load, Input

Maximum Permissible Input OHL

IH	A41	A51	A61
a (inch)	3.31	3.31	3.50
b (inch)	2.52	2.52	2.52
Fr1 max (lbs)	108	108	170

IH	A32	A33	A42	A43	A52	A62	A63
a (inch)	3.31	3.31	3.31	3.31	3.50	3.50	3.31
b (inch)	2.52	2.52	2.52	2.52	2.52	2.52	2.52
Fr1 max (lbs)	108	108	108	108	170	170	108

IB	A42	A52	A53	A72	A73
a (inch)	3.31	3.31	3.31	3.50	3.31
b (inch)	2.52	2.52	2.52	2.52	2.52
Fr1 max (lbs)	112	112	112	177	112

Physical Properties

Paint

Motovario products are supplied with the following surface treatments:

- De-burring by mechanical shearing system
- Accurate shot-peening
- Painting
- Washing and passivation
- Die-cast materials are always painted (except for AC motors).

Paint used on Motovario reducers meets the following specifications:

- Orange-peel blue-colored epoxy-polyester RAL 5010
- Polyester resin based heat-hardening powders, altered with epoxy resins, applied by electrostatic spray
- Heat resistance: 24 hours at 150°C (302°F)
- Corrosion strength: ASTM B 117/97 salt fog from 100 to 500 hours, depending on the surface's preliminary treatment
- Non-toxic and non-irritating according to EEC directives no. 67/548 regarding dangerous substances and no. 88/379 dangerous compounds
- Tests carried out on degreased Unichim white lattens (film thickness: 60 microns) comply with the following specifications:
    - o Adherence (ISO2409)
    - o Erichsen drawing (ISO152)
    - o Inverted shock (DIN53158)
    - o Cone-shaped mandrel (DIN53151)
    - o Hardness (ASTM D3363/74)

Lubrication

All Motovario reducers are supplied with lubricant. The mounting position of the reducers must be specified when ordering.

All HA and BA gear reducers and gear motors are maintenance-free and sealed for life. Both HA and BA series are supplied without oil plugs.

Recommended Lubrication Types	H A30 - A60	B A40 - A70	H A30 - A60 B A40 - A70	
	Mineral oil	Mineral oil	Synthetic	
Temp. (C°) Temp. (F°) ISO VG...	**-5 to +40 23 to 104 ISO VG220**	**-5 to +40 23 to 104 ISO VG340**	**-25 to +60 -13 to 140 ISO VG220**	**-30 to +50 -22 to 122 ISO VG150**
AGIP	BLASIA 220	ROTRA MP	-	-
SHELL	*OMALA OIL 220	*SPIRAX ST	-	-
ESSO	SPARTAN EP220	-	-	-
MOBIL	MOBILGEAR 630	-	SHC 630	SHC 629
CASTROL	ALPHA MAX 220	-	-	-
BP	ENERGOL GR-XP220	-	-	-

NOTE: Contact Motovario for suggested lubrication options for applications operating in ambient temperatures not listed.

*Supplied by Motovario as standard.

Lubrication Quantities (Liters)

H - CH	H A41	CHA41	A51	A61	A32	A42	A52	A62	A33	A43	A53	A63
B3-B5	0.2	0.13	0.25	0.62	0.68	0.7	1.2	1.9	1.1	1.16	1.9	2.4
B8												
B6-B7												
V5-V1							1.6	2.1			2.5	3.1
V6-V3												

B	A42	A52	A53	A72	A73
B3	0.33	0.42	0.63	1	1.21
B8					
B6-B7					
V5					
V6					

CB	A42	A52	A53	A72	A73
B3	0.33	0.42	0.55	1	1.13
B8					
B6-B7					
V5					
V6					

Weights

HA Series Weights (lbs)

Shaft Input Gear Reducer

	A32	A33	A41	A42	A43	A51	A52	A53	A61	A62	A63
IHA	11.47	13.67	8.16	13.45	15.66	10.36	23.37	26.24	15.88	28.67	33.74

NEMA C-Face Input Gear Reducer

	A32	A33	A41	A42	A43	A51	A52	A53	A61	A62	A63
56C	11.47	13.67	8.16	13.45	15.66	10.36	23.37	26.24	15.88	28.67	33.74
140TC	11.47		8.16	13.45		10.36	23.37	26.24	15.88	28.67	33.74
180TC							31.09		16.76	36.38	

IEC PAM Input Gear Reducer

	A32	A33	A41	A42	A43	A51	A52	A53	A61	A62	A63
63	10.58	11.03	7.28	12.79	14.99	9.70		25.58			32.19
71	10.80	11.25	7.50	13.01	15.21	9.92		25.80			32.41
80	11.47	13.67	8.16	13.45	15.66	10.36	23.37	26.24	15.88	28.67	33.74
90				13.45	15.66	10.36	23.37	26.24	15.88	28.67	33.74
100							31.09		16.76	36.38	
112							31.09		16.76	36.38	

Gearmotor

	A32	A33	A41	A42	A43	A51	A52	A53	A61	A62	A63
63	16.54	18.96	13.23	18.52	20.73	14.11		30.21			36.82
71	20.51	23.15	17.42	22.71	24.92	18.30		34.40			41.01
80	29.33	31.97	26.24	31.53	33.74	27.12	40.35	43.22	32.85	46.08	49.83
90S				35.72	37.93	31.31	44.54	47.41	37.04	50.27	54.02
90L				41.23	43.44	36.82	50.05	52.92	42.56	55.79	59.54
100							60.20		52.70	65.93	
112							82.91		75.41	88.64	

Gearmotor with Brake

	A32	A33	A41	A42	A43	A51	A52	A53	A61	A62	A63
63	19.40	21.83	16.10	21.39	23.59	16.98		33.08			39.69
71	24.70	27.34	21.61	26.90	29.11	22.49		38.59			45.20
80	36.16	38.81	33.08	38.37	40.57	33.96	47.19	50.05	39.69	52.92	56.67
90S				46.53	48.73	42.12	55.35	58.21	47.85	61.08	64.83
90L				52.04	54.24	47.63	60.86	63.72	53.36	66.59	70.34
100							71.00		63.50	76.73	
112							101.21		93.71	106.94	

Weights are close approximations, rounded to the nearest pound.
Weights do not include additional accessories.
Weights include lubrication.

BA Series Weights (lbs)

Shaft Input Gear Reducer

	A42	A52	A53	A72	A73
IBA	11.68	13.23	15.44	31.97	36.60

NEMA C-Face Input Gear Reducer

	A42	A52	A53	A72	A73
56C	11.68	13.23	15.44	31.97	36.60
140TC	11.68	13.23	15.44	31.97	36.60
180TC				48.49	

IEC PAM Input Gear Reducer

	A42	A52	A53	A72	A73
63	11.02	12.57	14.77		34.83
71	11.24	12.79	14.99		35.27
80	11.68	13.23	15.44	31.97	36.60
90		13.23	15.44	31.97	36.60
100				48.49	
112				48.49	

Gearmotor

	A42	A52	A53	A72	A73
63	16.76	18.74	22.49		39.46
71	20.94	23.15	26.90		43.87
80	29.76	31.97	35.71	49.38	52.69
90S		36.16	39.90	53.79	57.10
90L		41.67	45.42	59.30	62.61
100				78.04	
112				93.48	

Gearmotor with Brake

	A42	A52	A53	A72	A73
63	19.84	21.83	25.57		42.77
71	25.35	27.34	31.09		48.28
80	36.60	38.80	42.55	58.20	61.51
90S		46.74	50.49	61.51	64.82
90L		52.47	56.22	71.43	74.74
100				93.48	
112				115.52	

Weights are close approximations, rounded to the nearest pound.
Weights do not include additional accessories.
Weights include lubrication.

Installation and Use

Recommendations for installation:

- Avoid vibration by mounting the reducer securely to the application.
- Check the direction of rotation of the reducer output shaft before fitting the unit to the application.
- If the reducer is stored for long periods (4-6 months or more), make sure the oil seals are in contact with the reducer's internal lubricant. If the oil seal cannot contact the reducer's lubricant, change the oil seal before use. The seal's rubber coating may stick to the shaft or may lose the elasticity necessary to function properly.
- Mount hollow output shaft reducers with Motovario torque arms or output flanges. If Motovario mounts are not available, make sure the application allows for movement of the reducer.
- Whenever possible, protect the reducer against solar radiation and bad weather.
- Ensure the motor cools correctly by allowing air to flow freely on the motor's fan side.
- When ambient temperatures are below -5°C (23°F) or above 40°C (104°F), contact Motovario for assistance.
- Pulleys, sprockets, couplings, shafts and other output devices must be securely mounted on the solid or hollow shafts. Use threaded holes or similar locking methods to ensure correct operation without risking damage to the bearings or external reducer parts. Lubricate all surfaces in contact to avoid seizure or oxidation.
- Rubber parts (seals and o-rings) and the holes on the breather plugs (if applicable) must not be painted.
- Do not immediately apply the maximum application load. Start-up slowly whenever possible.
- Take extra precautions when there are parts, objects, materials or people under the reducer that can be damaged by any oil leak.
- Applications operating in ambient temperatures below -30°C (-22°F) or over 60°C (140°F) require special oil seals.
- Applications operating in ambient temperatures under 0°C (32°F) have special needs:
    - o Motors must be suitable for operation at the ambient temperature.
    - o Colder temperatures require more starting torque from the motor. The motor power must be adequate to exceed the required starting torque.
- The viscosity of the reducer lubrication is higher at start-up. Whenever possible, run the reducer under no load for a few minutes to decrease oil viscosity.
- Installations and maintenance guides are available from Motovario or at www.motovario.com.
- Instruction sheets for mounting IEC and NEMA motors are available from Motovario or at www.motovario.com.

Shaft Construction

Motovario customers can mount the BA series directly on to the drive shaft of their application.

- The drive shaft must be manufactured according to the dimensions shown in the following diagrams. Not following these dimensions can lead to shaft deformation, inability to service or remove the reducer from the application or cancellation of the factory warranty.
- The suggested length of the drive shaft from the shoulder to shaft-end is dimension V. The shaft length must be greater than dimension VA on standard shaft units; greater than or equal to dimension V on shrink disk units. The drive shaft must be manufactured with a shoulder in order to mount the reducer securely.
- The reducer must be fixed to the application using a torque arm, output flange, mounting feet or by other means of stabilizing the reducer. If the reducer cannot be fixed, make sure the application allows for movement of the reducer assembly.
- Check the output rotation of the reducer before mounting to the application.
- Lubricate all metal surfaces that come in contact to avoid seizure and oxidation.
- Install the locking kit (retaining bolt, stainless steel washer and optional rubberized washer) to secure the drive shaft and reducer together. Use a rubberized or plastic washer inside the stainless steel washer to seal the hollow output bore from intrusion by water, dust or other contaminants.
- Do not over-tighten the retaining bolt so as to deform the washer.
- The locking kit will rotate with the drive shaft. Keep away loose items that may become tangled in the locking kit.

Do not immediately apply the maximum load of an application. Start slowly whenever possible.

Installation and Use

Shaft Construction

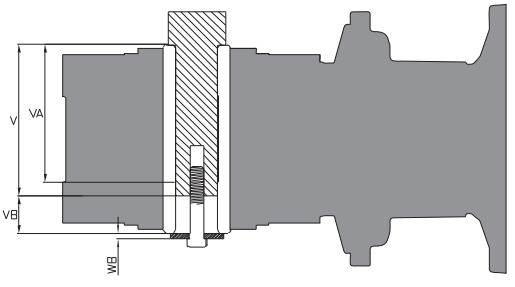

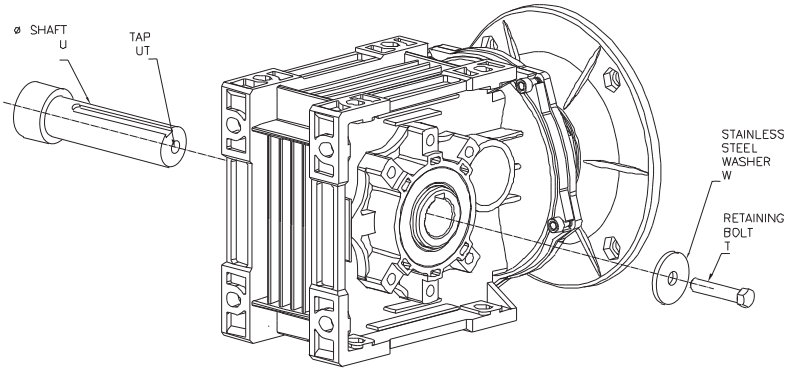

BA Shaft Dimensions

	T	U	UT	V	VA*	VB	W		WB
							Ø OD	Ø ID	
BA40	1/4-20 x 1"	0.750 $^{+0.0000}_{-0.0005}$	1/4-20	3.74	3.01	0.2	1.25	0.281	0.125
BA50	3/8-16 x 1"	1.000 $^{+0.0000}_{-0.0005}$	3/8-16	4.21	3.48	0.2	1.50	0.406	0.125
BA70	1/2-13 x 1"	1.250 $^{+0.0000}_{-0.0005}$	1/2-13	5.31	4.38	0.2	2.00	0.531	0.160

Shrink Disk Shaft Construction

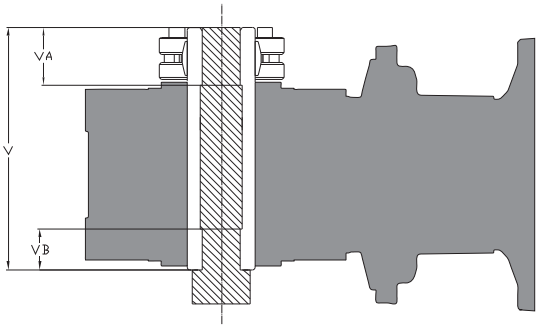

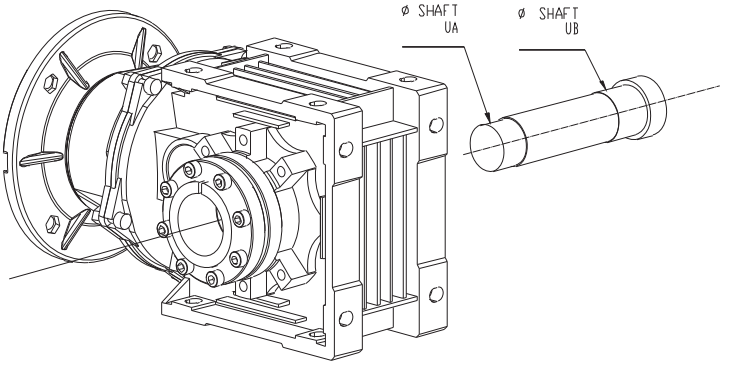

BA Shrink Disk Shaft Dimensions

	UA	UB	V*	VA	VB
BA40	24mm $^{+0.000mm}_{-0.021mm}$	24mm $^{+0.000mm}_{-0.021mm}$	130mm	35mm	25mm
BA50	30mm $^{+0.000mm}_{-0.021mm}$	31mm $^{+0.000mm}_{-0.025mm}$	143mm	35mm	35mm
BA70	35mm $^{+0.000mm}_{-0.025mm}$	36mm $^{+0.000mm}_{-0.036mm}$	173mm	35mm	40mm

*Minimum shaft length

Warranty

Terms and Conditions of Sale

The following will be the standard terms and conditions of sale between Motovario™ Corporation (noted herein as “Motovario”) and its customers.

Solely Motovario™ terms and conditions of sale will determine Motovario’s™ liabilities. It is understood that upon acceptance by Motovario™ of a customer’s purchase order, the terms and conditions noted herein shall govern. No modification of, or addition to, the terms and conditions of sale outlined herein will be recognized by Motovario™ unless specifically agreed to in writing and signed by an officer of Motovario™ Corporation.

All prices are F.O.B. Alpharetta, GA. Method of pre-paid shipment is at the sole discretion of Motovario™. Weights are carefully estimated, but not guaranteed.

Payment Terms

Unless otherwise provided, terms of payment are 30 days net from the date of invoice for customers with approved credit. Motovario™ reserves the right to charge interest up to the maximum rate allowed by law on any balance outstanding after the date payment is due. For those customers without approved credit, Motovario™ may require full or partial payment in advance to continue with the production or shipment of any open and/or pending orders.

Motovario™ will not accept changes in the specification of an order unless such changes are requested in writing and agreed to in writing by an authorized officer of Motovario™.

Delivery

Great care is taken in packaging Motovario’s™ products, and Motovario™ cannot be held liable for breakage after having provided material in good working order to the transportation company. Motovario’s™ responsibility ceases with the delivery to the carrier, at which time title passes to the consignee. At that time, all claims for loss, damage, and delay must be made to the carrier. Purchaser must make claims for shortages or incorrect material in writing within thirty (30) days after receipt of shipment; a failure to give Motovario™ such written notice within said thirty (30) day period shall serve as an unqualified acceptance of the products provided, and a waiver by the purchaser of all such claims. When goods are received in a damaged condition with the container intact, the consignee should obtain a concealed damage report from the carrier on the day of delivery.

Cancellation or Suspension

Orders placed with Motovario™ are not subject to cancellation or suspension except with Motovario’s™ consent and upon payment to Motovario™ of cancellation charges.

Limited Warranty

Motovario warrants all of its products against defects in material and workmanship for a period of one (1) year in service to a maximum of 18 months from the date of shipment. Motovario’s™ obligation under this warranty is to service, repair, or replace any unit returned to Motovario™ for that specific purpose with transportation charges prepaid. Any attempt to repair Motovario™ products by anyone other than Motovario™ voids this warranty. Use of products above rated capacity, misuse, field alterations of products, damage due to lack of maintenance or improper storage, neglect or accident are also excluded from this Limited Warranty.

Any equipment or components of the products supplied that are not of Motovario’s™ own manufacture are sold under such warranty as the maker thereof provides Motovario™ and Motovario™ is able to enforce: Such items are not warranted by Motovario™ in any way.

Returned Goods Policy

Authorization and shipping instructions must be obtained by the purchaser from Motovario™ prior to returning any product. The product must be returned with complete identification in accordance with instructions provided by Motovario™ for the return to be accepted. In no event will Motovario™ be responsible for products returned without prior authorization or identification.

Where the purchaser requests authorization to return to Motovario™ products for reasons other than an incorrect shipment by Motovario™ or damaged goods, a restocking charge of a minimum of 25% of the net invoiced amount for each item will be assessed for placing the returned goods in a salable condition and for outgoing freight paid by Motovario™.

Any product returned for repair that is outside the warranty coverage period noted above will be subject to labor and material costs. All labor and materials costs provided by Motovario™ and its employees are understood to be estimates only.

Liability for Damage

The liability of Motovario™ is strictly limited to the above-stated obligations. Motovario™ takes no responsibility deriving from accidents of any nature that may occur during use of the products sold, whether they be considered defective or otherwise; also in cases of the choice of application being recommended by personnel in the Motovario™ sales organization. The user is obligated, under his own exclusive responsibility, to proceed with the utmost caution and make provisions for safety devices that conform with applicable directives, standards and technical regulations, and to limit adequately damage to personnel and/or property that may result from failure.

Notes

Notes

Notes

Notes