APEX DYNAMICS, INC.

HIGH PRECISION
PLANETARY GEARBOX

AB / ABR Series

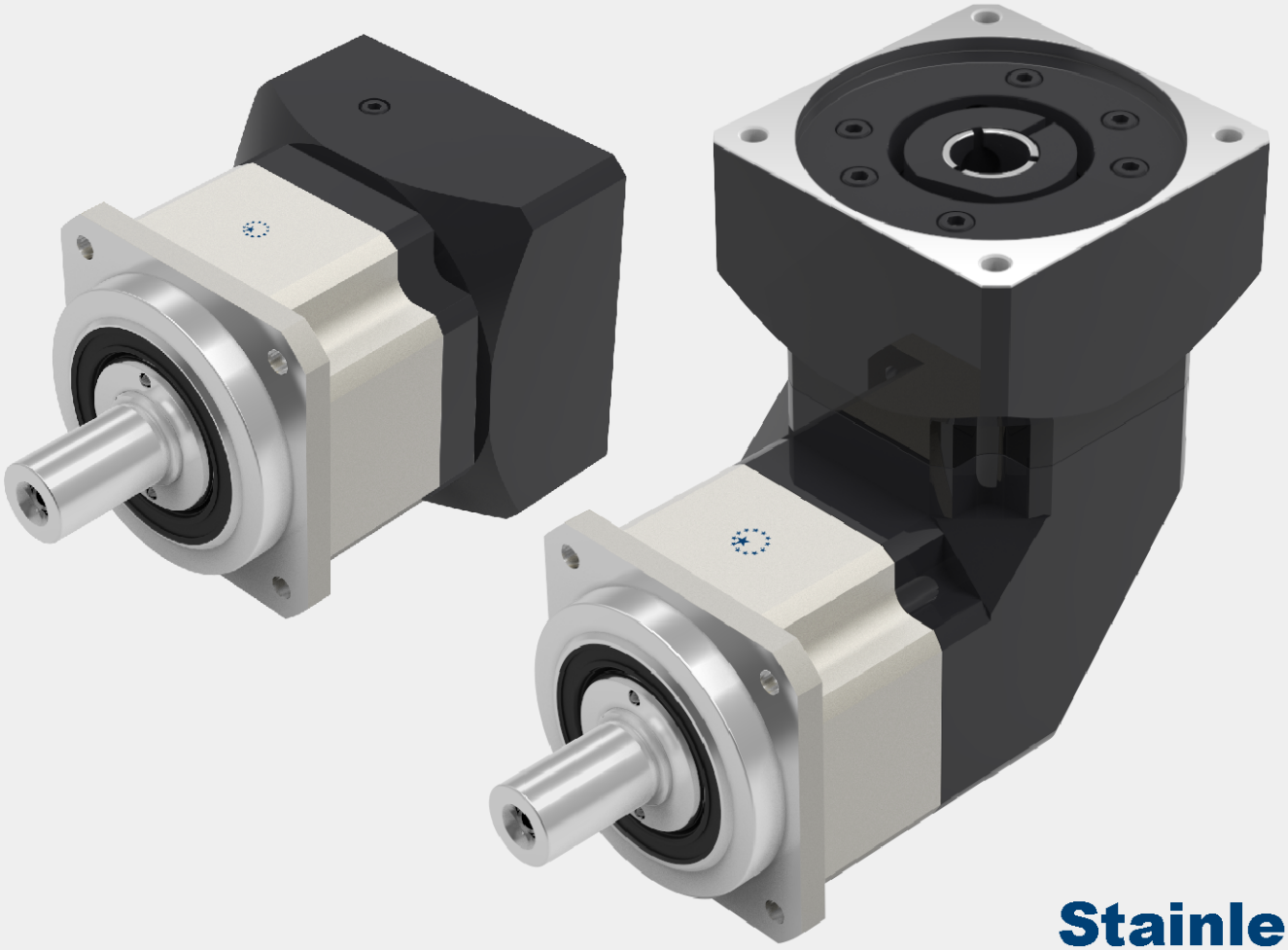

Stainless



Apex Dynamics, Inc. is the world's most productive manufacturer of servomotor drive planetary gearboxes for precision automation machinery. From our 800,000+ square foot ISO 9001:2008 manufacturing facility, based in Taichung, Taiwan, we manufacture to stock using the newest precision machine tools and quality test and inspection equipment. Complete focus on quality and precision allows us to produce our high quality gearheads at precision levels down to less than 1 arc minute (1/60 th of a degree), with consistency and high reliability.

Based on more than twenty years of accumulated manufacturing and marketing experience, plus the highest level of technical production capabilities, Apex Dynamics, Inc. designs and builds technically advanced, high speed, low backlash servo application planetary gearboxes. Our Break through patented technology (over 6 patents), provides the customer with the optimum high precision helical reducer at a reasonable price. We are continuously improving processes, finding proper and effective methods to provide customers new solutions for difficult applications, and developing new products.

The primary focus in daily operation is quality. We pride ourselves on our dedication to quality; our duty - is customer satisfaction.

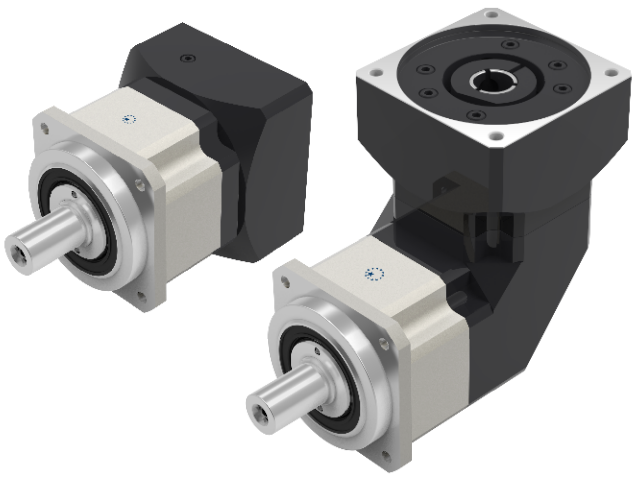

AB Series

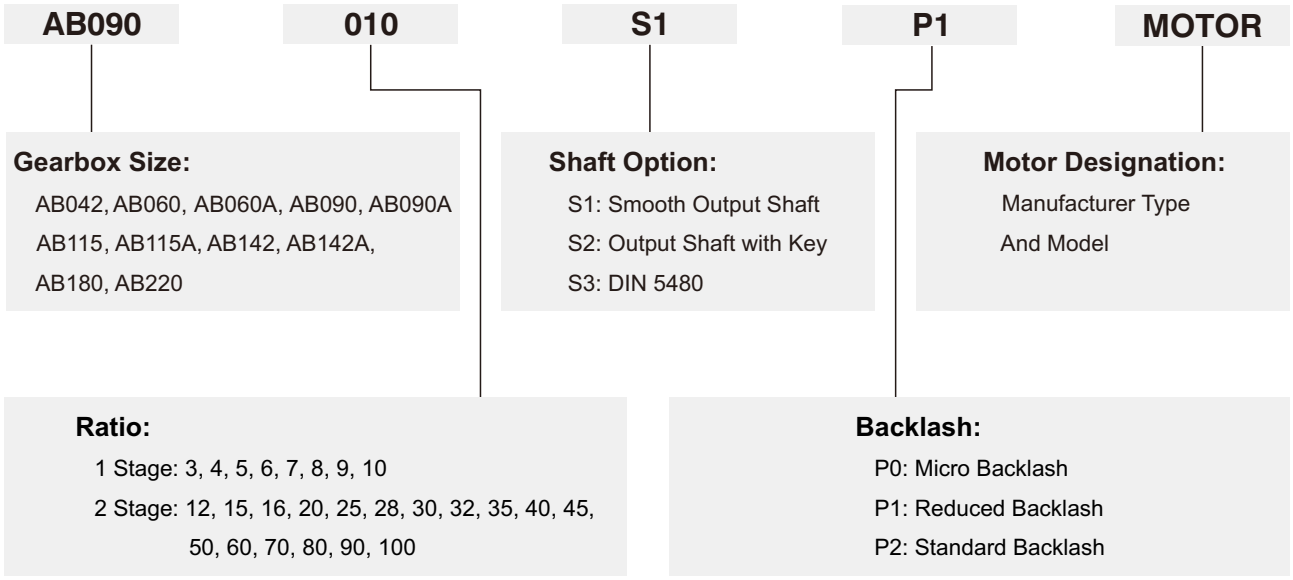

Ordering Example: AB090-010-S1-P1 / SIEMENS 1FT6 041-4AF71

ABR Series

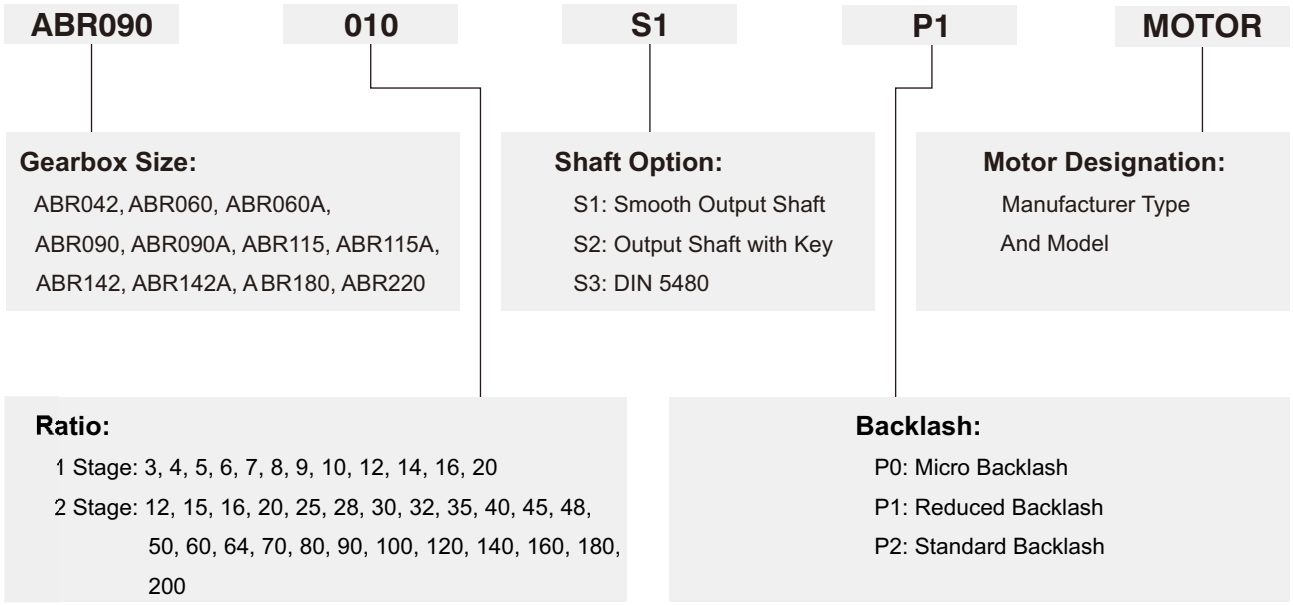

Ordering Example: ABR090-010-S1-P1 / SIEMENS 1FT6 041-4AF71

©2018 by APEX DYNAMICS, INC.
APEX DYNAMICS, INC. reserves modification and copyrights of all technical specifications, illustrations and drawings in this catalog in allowance for continuous products development and advancement.
For the newest data and information, please visit http://www.apexdyna.com/

Specifications / AB Series

Gearbox Performance

Model No.		Stage	Ratio[A]	AB042	AB060	AB060A	AB090	AB090A	AB115	AB115A	AB142	AB142A	AB180	AB220
Nominal Output Torque T_{2N}	Nm	1	3	20	55	–	130	–	208	–	342	–	588	1,140
			4	19	50	–	140	–	290	–	542	–	1,050	1,700
			5	22	60	–	160	–	330	–	650	–	1,200	2,000
			6	20	55	–	150	–	310	–	600	–	1,100	1,900
			7	19	50	–	140	–	300	–	550	–	1,100	1,800
			8	17	45	–	120	–	260	–	500	–	1,000	1,600
			9	14	40	–	100	–	230	–	450	–	900	1,500
			10	14	40	–	100	–	230	–	450	–	900	1,500
		2	12	19	50	50	140	140	290	290	542	542	1,050	1,700
			15	20	55	55	130	130	208	208	342	342	588	1,140
			16	19	50	50	140	140	290	290	542	542	1,050	1,700
			20	19	50	50	140	140	290	290	542	542	1,050	1,700
			25	22	60	60	160	160	330	330	650	650	1,200	2,000
			28	19	50	50	140	140	300	300	550	550	1,100	1,800
			30	20	55	55	150	150	310	310	600	600	1,100	1,900
			32	17	45	45	120	120	260	260	500	500	1,000	1,600
			35	19	50	50	140	140	300	300	550	550	1,100	1,800
			40	17	45	45	120	120	260	260	500	500	1,000	1,600
			45	14	40	40	100	100	230	230	450	450	900	1,500
			50	22	60	60	160	160	330	330	650	650	1,200	2,000
			60	20	55	55	150	150	310	310	600	600	1,100	1,900
			70	19	50	50	140	140	300	300	550	550	1,100	1,800
			80	17	45	45	120	120	260	260	500	500	1,000	1,600
			90	14	40	40	100	100	230	230	450	450	900	1,500
			100	14	40	40	100	100	230	230	450	450	900	1,500
Emergency Stop Torque T_{2NOT}[B]	Nm	1,2	3~100	3 times of Nominal Output Torque										
Nominal Input Speed n_{1N}	rpm	1,2	3~100	5,000	5,000	5,000	4,000	4,000	4,000	4,000	3,000	3,000	3,000	2,000
Max. Input Speed n_{1B}	rpm	1,2	3~100	10,000	10,000	10,000	8,000	8,000	8,000	8,000	6,000	6,000	6,000	4,000
Micro Backlash P0	arcmin	1	3~10	–	–	–	≤1	–	≤1	–	≤1	–	≤1	≤1
		2	12~100	–	–	–	–	–	≤3	≤3	≤3	≤3	≤3	≤3
Reduced Backlash P1	arcmin	1	3~10	≤3	≤3	–	≤3	–	≤3	–	≤3	–	≤3	≤3
		2	12~100	≤5	≤5	≤5	≤5	≤5	≤5	≤5	≤5	≤5	≤5	≤5
Standard Backlash P2	arcmin	1	3~10	≤5	≤5	–	≤5	–	≤5	–	≤5	–	≤5	≤5
		2	12~100	≤7	≤7	≤7	≤7	≤7	≤7	≤7	≤7	≤7	≤7	≤7
Torsional Rigidity	Nm/arcmin	1,2	3~100	3	7	7	14	14	25	25	50	50	145	225
Max. Radial Load F_{2rB}[C]	N	1,2	3~100	780	1,530	1,530	3,250	3,250	6,700	6,700	9,400	9,400	14,500	50,000
Max. Axial Load F_{2aB}[C]	N	1,2	3~100	390	765	765	1,625	1,625	3,350	3,350	4,700	4,700	7,250	25,000
Service Life[D]	hr	1,2	3~100	20,000										
Efficiency η	%	1	3~10	≥97%										
		2	12~100	≥94%										
Weight	kg	1	3~10	0.6	1.3	–	3.7	–	7.8	–	14.5	–	29	48
		2	12~100	0.8	1.5	1.9	4.1	5.3	9	11.4	17.5	20.7	33	60
Operating Temp	°C	1,2	3~100	-10°C~90°C										
Lubrication		1,2	3~100	Synthetic lubrication oils										
Degree of Gearbox Protection		1,2	3~100	IP65										
Mounting Position		1,2	3~100	all directions										
Noise (n_1=3000rpm, i=10, No load)[E]	dB(A)	1,2	3~100	≤56	≤58	≤60	≤60	≤63	≤63	≤65	≤65	≤67	≤67	≤70

A. Ratio ($i=N_{in} / N_{out}$)

B. Max. acceleration torque T_{2B} = 60% of T_{2NOT}

C. Applied to the output shaft center at 100 rpm

D. For continuous operation, the service life time is less than 10,000 hrs

E. These values are measured by gearbox with ratio = 10 (1-stage) or ratio = 100 (2-stage) at 3,000 rpm no loading.
By lower ratio and/or higher RPM, the noise level could be 3 to 5 dB higher

Ordering Code

Gearbox Inertia

Model No.		Stage	Ratio	AB042	AB060	AB060A	AB090	AB090A	AB115	AB115A	AB142	AB142A	AB180	AB220
Mass Moments of Inertia J_1	kg・cm^2	1	3	0.03	0.16	–	0.61	–	3.25	–	9.21	–	28.98	69.61
			4	0.03	0.14	–	0.48	–	2.74	–	7.54	–	23.67	54.37
			5	0.03	0.13	–	0.47	–	2.71	–	7.42	–	23.29	53.27
			6	0.03	0.13	–	0.45	–	2.65	–	7.25	–	22.75	51.72
			7	0.03	0.13	–	0.45	–	2.62	–	7.14	–	22.48	50.97
			8	0.03	0.13	–	0.44	–	2.58	–	7.07	–	22.59	50.84
			9	0.03	0.13	–	0.44	–	2.57	–	7.04	–	22.53	50.63
			10	0.03	0.13	–	0.44	–	2.57	–	7.03	–	22.51	50.56
		2	12	0.03	0.03	0.16	0.16	0.61	0.61	3.25	3.25	9.21	9.21	28.98
			15	0.03	0.03	0.13	0.13	0.47	0.47	2.71	2.71	7.42	7.42	23.29
			16	0.03	0.03	0.14	0.14	0.48	0.48	2.74	2.74	7.54	7.54	23.67
			20	0.03	0.03	0.13	0.13	0.47	0.47	2.71	2.71	7.42	7.42	23.29
			25	0.03	0.03	0.13	0.13	0.47	0.47	2.71	2.71	7.42	7.42	23.29
			28	0.03	0.03	0.14	0.14	0.48	0.48	2.74	2.74	7.54	7.54	23.67
			30	0.03	0.03	0.13	0.13	0.47	0.47	2.71	2.71	7.42	7.42	23.29
			32	0.03	0.03	0.14	0.14	0.48	0.48	2.74	2.74	7.54	7.54	23.67
			35	0.03	0.03	0.13	0.13	0.47	0.47	2.71	2.71	7.42	7.42	23.29
			40	0.03	0.03	0.13	0.13	0.47	0.47	2.71	2.71	7.42	7.42	23.29
			45	0.03	0.03	0.13	0.13	0.47	0.47	2.71	2.71	7.42	7.42	23.29
			50	0.03	0.03	0.13	0.13	0.44	0.44	2.57	2.57	7.03	7.03	22.51
			60	0.03	0.03	0.13	0.13	0.44	0.44	2.57	2.57	7.03	7.03	22.51
			70	0.03	0.03	0.13	0.13	0.44	0.44	2.57	2.57	7.03	7.03	22.51
			80	0.03	0.03	0.13	0.13	0.44	0.44	2.57	2.57	7.03	7.03	22.51
			90	0.03	0.03	0.13	0.13	0.44	0.44	2.57	2.57	7.03	7.03	22.51
			100	0.03	0.03	0.13	0.13	0.44	0.44	2.57	2.57	7.03	7.03	22.51

Dimensions (1-stage, Ratio i=3~10) / AB Series

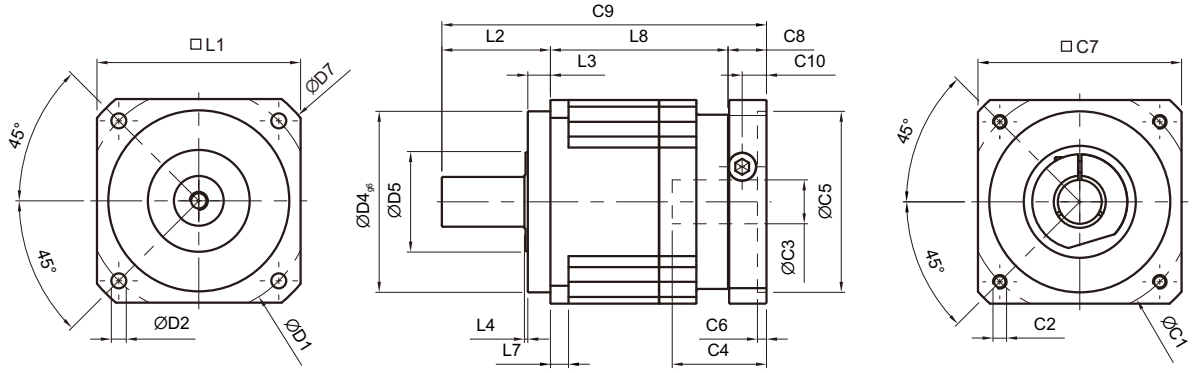

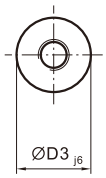

Shaft Option S1

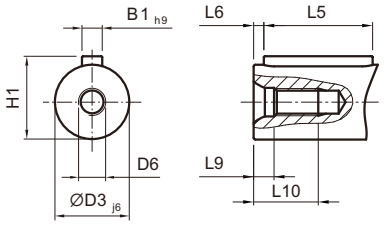

Shaft Option S2

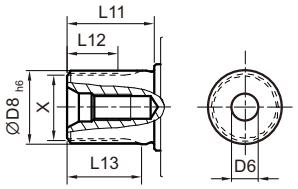

Shaft Option S3

[unit: mm]

Dimension	AB042	AB060	AB090	AB115	AB142	AB180	AB220
D1	50	70	100	130	165	215	250
D2	3.4	5.5	6.6	9	11	13	17
D3 j6	13	16	22	32	40	55	75
D4 g6	35	50	80	110	130	160	180
D5	22	45	65	95	75	95	115
D6	M4 x 0.7P	M5 x 0.8P	M8 x 1.25P	M12 x 1.75P	M16 x 2P	M20 x 2.5P	M20 x 2.5P
D7	56	80	116	152	185	240	292
D8 h6	-	16	22	32	40	55	75
L1	42	60	90	115	142	180	220
L2	26	37	48	65	97	105	138
L3	5.5	7	10	12	15	20	30
L4	1	1.5	1.5	2	3	3	3
L5	16	25	32	40	63	70	90
L6	2	2	3	5	5	6	7
L7	4	6	8	10	12	15	20
L8	31	61	78.5	102	119.5	154	163.5
L9	4.5	4.8	7.2	10	12	15	15
L10	10	12.5	19	28	36	42	42
L11	-	26	26	26	40	41.5	52
L12	-	15	15	15	20	21.5	28
L13	-	21	22.5	23	33.5	33.5	45
C1[1]	46	70	100	130	165	215	235
C2[1]	M4 x 0.7P	M5 x 0.8P	M6 x 1P	M8 x 1.25P	M10 x 1.5P	M12 x 1.75P	M12 x 1.75P
C3[1]	≤11 / ≤12[2]	≤14 / ≤16[2]	≤19 / ≤24	≤32	≤38	≤48	≤55
C4[1]	25	34	40	50	60	85	116
C5[1]	30	50	80	110	130	180	200
C6[1]	3.5	8	4	5	6	6	6
C7[1]	42	60	90	115	142	190	220
C8[1]	29.5	19	17	19.5	22.5	29	63
C9[1]	86.5	117	143.5	186.5	239	288	364.5
C10[1]	8.75	13.5	10.75	13	15	20.75	53
B1 h9	5	5	6	10	12	16	20
H1	15	18	24.5	35	43	59	79.5
X DIN5480	-	W16x0.8x 30x18x6m	W22x1.25x 30x16x6m	W32x1.25x 30x24x6m	W40x2x 30x18x6m	W55x2x 30x26x6m	W70x2x 30x34x6m

1. C1~C10 are motor specific dimensions (metric std shown). Refer to www.apexdyna.com and Design Tool to view your specific motor mounting system.
2. AB042 ratio 5, 10 offers C3 ≤ 12 option; AB060 ratio 5, 10 offers C3 ≤ 16 option.

Dimensions (2-stage, Ratio i=12~100) / AB Series

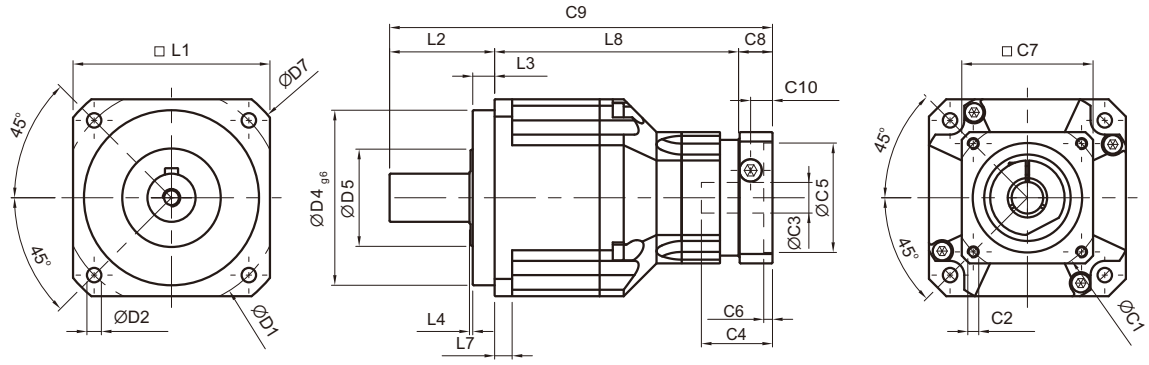

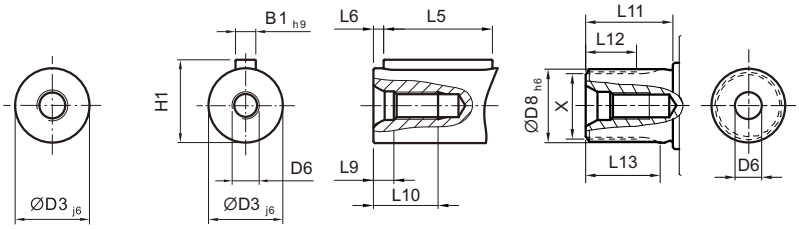

Shaft Option S1 **Shaft Option S2** **Shaft Option S3**

AB060A / AB090A / AB115A / AB142A

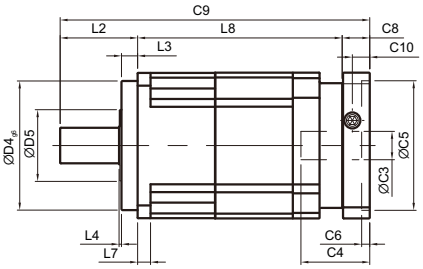

[unit: mm]

Dimension	AB042	AB060	AB060A	AB090	AB090A	AB115	AB115A	AB142	AB142A	AB180	AB220
D1	50	70		100		130		165		215	250
D2	3.4	5.5		6.6		9		11		13	17
D3 j6	13	16		22		32		40		55	75
D4 g6	35	50		80		110		130		160	180
D5	22	45		65		95		75		95	115
D6	M4 x 0.7P	M5 x 0.8P		M8 x 1.25P		M12 x 1.75P		M16 x 2P		M20 x 2.5P	M20 x 2.5P
D7	56	80		116		152		185		240	292
D8 h6	-	16		22		32		40		55	75
L1	42	60		90		115		142		180	220
L2	26	37		48		65		97		105	138
L3	5.5	7		10		12		15		20	30
L4	1	1.5		1.5		2		3		3	3
L5	16	25		32		40		63		70	90
L6	2	2		3		5		5		6	7
L7	4	6		8		10		12		15	20
L8	58.5	72	98	111.5	126.5	143.5	163	176	191	209.5	248
L9	4.5	4.8		7.2		10		12		15	15
L10	10	12.5		19		28		36		42	42
L11	-	26		26		26		40		41.5	52
L12	-	15		15		15		20		21.5	28
L13	-	21		22.5		23		33.5		33.5	45
C1[3]	46	46	70	70	100	100	130	130	165	165	215
C2[3]	M4 x 0.7P	M4 x 0.7P	M5 x 0.8P	M5 x 0.8P	M6 x 1P	M6 x 1P	M8 x 1.25P	M8 x 1.25P	M10 x 1.5P	M10 x 1.5P	M12 x 1.75P
C3[3]	≤11 / ≤12	≤11 / ≤12	≤14 / ≤16	≤14 / ≤15.875 / ≤16	≤19 / ≤24	≤19 / ≤24	≤32	≤32	≤38	≤38	≤48
C4[3]	25	25	34	34	40	40	50	50	60	60	85
C5[3]	30	30	50	50	80	80	110	110	130	130	180
C6[3]	3.5	3.5	8	8	4	4	5	5	6	6	6
C7[3]	42	42	60	60	90	90	115	115	142	142	190
C8[3]	29.5	29.5	19	19	17	17	19.5	19.5	22.5	22.5	29
C9[3]	114	138.5	154	178.5	191.5	225.5	247.5	292.5	310.5	337	415
C10[3]	8.75	8.75	13.5	13.5	10.75	10.75	13	13	15	15	20.75
B1 h9	5	5		6		10		12		16	20
H1	15	18		24.5		35		43		59	79.5
X DIN5480	-	W16x0.8x 30x18x6m		W22x1.25x 30x16x6m		W32x1.25x 30x24x6m		W40x2x 30x18x6m		W55x2x 30x26x6m	W70x2x 30x34x6m

3. C1~C10 are motor specific dimensions (metric std shown). Refer to www.apexdyna.com and Design Tool to view your specific motor mounting system.

Specifications / ABR Series

Gearbox Performance

Model No.		Stage	Ratio[A]	ABR042	ABR060	ABR060A	ABR090	ABR090A	ABR115	ABR115A	ABR142	ABR142A	ABR180	ABR220
Nominal Output Torque T_{2N}	Nm	1	3	9	36	–	90	–	195	–	342	–	588	1,140
			4	12	48	–	120	–	260	–	520	–	1,040	1,680
			5	15	60	–	150	–	325	–	650	–	1,200	2,000
			6	18	55	–	150	–	310	–	600	–	1,100	1,900
			7	19	50	–	140	–	300	–	550	–	1,100	1,800
			8	17	45	–	120	–	260	–	500	–	1,000	1,600
			9	14	40	–	100	–	230	–	450	–	900	1,500
			10	14	60	–	150	–	325	–	650	–	1,200	2,000
			12	–	55	–	150	–	310	–	600	–	1,100	1,900
			14	–	42	–	140	–	300	–	550	–	1,100	1,800
			16	–	45	–	120	–	260	–	500	–	1,000	1,600
			20	–	40	–	100	–	230	–	450	–	900	1,500
		2	12	12	–	–	–	–	–	–	–	–	–	–
			15	14	–	–	–	–	–	–	–	–	–	–
			16	15	–	–	–	–	–	–	–	–	–	–
			20	14	–	–	–	–	–	–	–	–	–	–
			25	15	60	60	150	150	325	325	650	650	1,200	2,000
			28	19	50	50	140	140	300	300	550	550	1,100	1,800
			30	20	55	55	150	150	310	310	600	600	1,100	1,900
			32	17	45	45	120	120	260	260	500	500	1,000	1,600
			35	19	50	50	140	140	300	300	550	550	1,100	1,800
			40	17	45	45	120	120	260	260	500	500	1,000	1,600
			45	14	40	40	100	100	230	230	450	450	900	1,500
			48	–	–	55	150	150	310	310	600	600	1,100	1,900
			50	14	60	60	100	100	230	230	650	650	1,200	2,000
			60	20	55	55	150	150	310	310	600	600	1,100	1,900
			64	–	–	45	120	120	260	260	500	500	1,000	1,600
			70	19	50	50	140	140	300	300	550	550	1,100	1,800
			80	17	45	45	120	120	260	260	500	500	1,000	1,600
			90	14	40	40	100	100	230	230	450	450	900	1,500
			100	14	40	60	150	150	325	325	650	650	1,200	2,000
			120	–	–	55	150	150	310	310	600	600	1,100	1,900
			140	–	–	50	140	140	300	300	550	550	1,100	1,800
			160	–	–	45	120	120	260	260	550	550	1,000	1,600
			180	–	–	40	100	100	230	230	450	450	900	1,500
			200	–	–	40	100	100	230	230	450	450	900	1,500
Emergency Stop Torque T_{2NOT}[B]	Nm	1,2	3~200	3 times of Nominal Output Torque										
Nominal Input Speed n_{1N}	rpm	1,2	3~200	5,000	5,000	5,000	4,000	4,000	4,000	4,000	3,000	3,000	3,000	2,000
Max. Input Speed n_{1B}	rpm	1,2	3~200	10,000	10,000	10,000	8,000	8,000	8,000	8,000	6,000	6,000	6,000	4,000
Micro Backlash P0	arcmin	1	3~20	–	–	–	≤2	–	≤2	–	≤2	–	≤2	≤2
		2	12~200	–	–	–	≤4	≤4	≤4	≤4	≤4	≤4	≤4	≤4
Reduced Backlash P1	arcmin	1	3~20	≤4	≤4	–	≤4	–	≤4	–	≤4	–	≤4	≤4
		2	12~200	≤7	≤7	≤7	≤7	≤7	≤7	≤7	≤7	≤7	≤7	≤7
Standard Backlash P2	arcmin	1	3~20	≤6	≤6	–	≤6	–	≤6	–	≤6	–	≤6	≤6
		2	12~200	≤9	≤9	≤9	≤9	≤9	≤9	≤9	≤9	≤9	≤9	≤9
Torsional Rigidity	Nm/arcmin	1,2	3~200	3	7	7	14	14	25	25	50	50	145	225
Max. Radial Load F_{2rB}[C]	N	1,2	3~200	780	1,530	1,530	3,250	3,250	6,700	6,700	9,400	9,400	14,500	50,000
Max. Axial Load F_{2aB}[C]	N	1,2	3~200	390	765	765	1,625	1,625	3,350	3,350	4,700	4,700	7,250	25,000
Service Life[D]	hr	1,2	3~200	20,000										
Efficiency η	%	1	3~20	≥95%										
		2	12~200	≥92%										
Weight	kg	1	3~20	0.9	2.1	–	6.4	–	13	–	24.5	–	51	83
		2	12~200	1.2	1.5	2.7	7.8	7.9	14.2	15.9	27.5	29.6	54	95
Operating Temp	°C	1,2	3~200	-10°C~+90°C										
Lubrication		1,2	3~200	Synthetic lubrication oils										
Degree of Gearbox Protection		1,2	3~200	IP65										
Mounting Position		1,2	3~200	all directions										
Noise (n_1=3000rpm, i=10, No load)[E]	dB(A)	1,2	3~200	≤61	≤63	≤65	≤65	≤68	≤68	≤70	≤70	≤72	≤72	≤74

A. Ratio ($i=N_{in} / N_{out}$)
B. Max. acceleration torque T_{2B} = 60% of T_{2NOT}
C. Applied to the output shaft center at 100 rpm
D. For continuous operation, the service life time is less than 10,000 hrs
E. These values are measured by gearbox with ratio = 10 (1-stage) or ratio = 100 (2-stage) at 3,000 rpm no loading.
By lower ratio and/or higher RPM, the noise level could be 3 to 5 dB higher

Gearbox Inertia

Model No.		Stage	Ratio	ABR042	ABR060	ABR060A	ABR090	ABR090A	ABR115	ABR115A	ABR142	ABR142A	ABR180	ABR220
Mass Moments of Inertia J_1	kg・cm^2	1	3~10	0.09	0.35	–	2.25	–	6.84	–	23.4	–	68.9	135.4
			12~20	–	0.07	–	1.87	–	6.25	–	21.8	–	65.6	119.8
		2	12~20	0.09	–	–	–	–	–	–	–	–	–	–
			25~90	0.09	0.09	0.35	0.35	2.25	2.25	6.84	6.84	23.4	23.4	68.9
			48, 64	–	–	0.07	0.31	1.87	1.87	6.25	6.25	21.8	21.8	65.6
			100~200	–	–	0.07	0.31	1.87	1.87	6.25	6.25	21.8	21.8	65.6

Dimensions (1-stage, Ratio i=3~20) / ABR Series

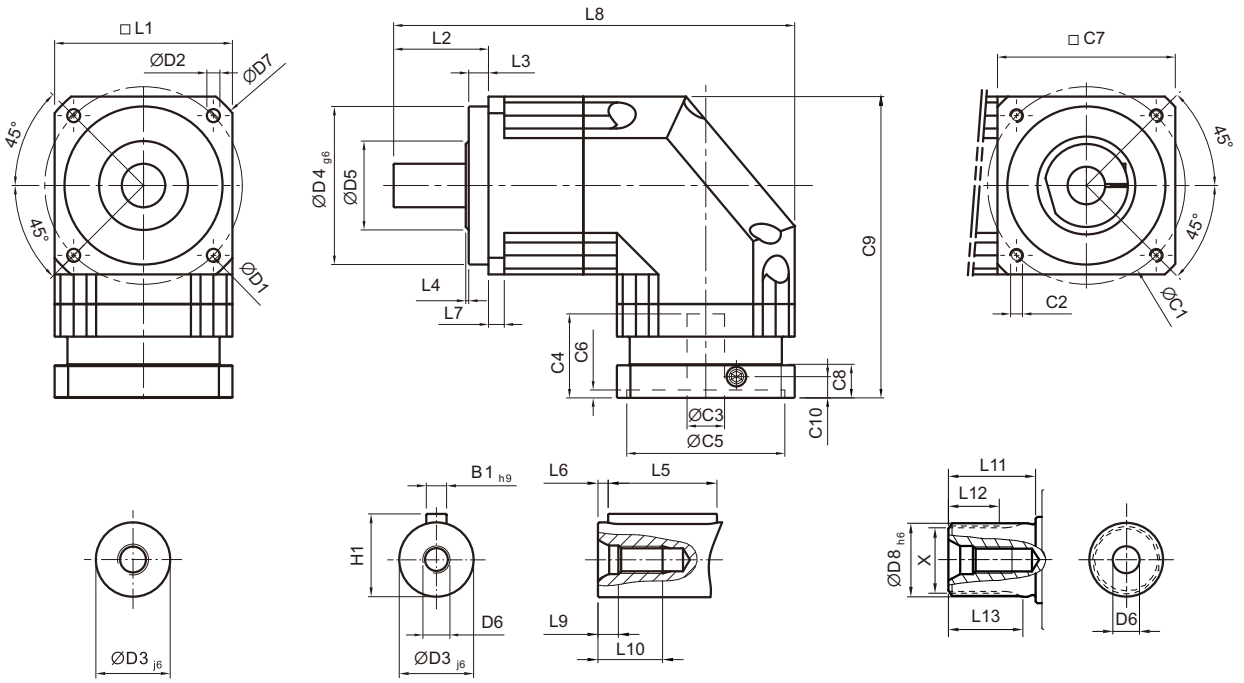

Shaft Option S1 **Shaft Option S2** **Shaft Option S3**

[unit: mm]

Dimension	ABR042	ABR060	ABR090	ABR115	ABR142	ABR180	ABR220
D1	50	70	100	130	165	215	250
D2	3.4	5.5	6.6	9	11	13	17
D3 j6	13	16	22	32	40	55	75
D4 g6	35	50	80	110	130	160	180
D5	22	45	65	95	75	95	115
D6	M4 x 0.7P	M5 x 0.8P	M8 x 1.25P	M12 x 1.75P	M16 x 2P	M20 x 2.5P	M20 x 2.5P
D7	56	80	116	152	185	240	292
D8 h6	-	16	22	32	40	55	75
L1	42	60	90	115	142	180	220
L2	26	37	48	65	97	105	138
L3	5.5	7	10	12	15	20	30
L4	1	1.5	1.5	2	3	3	3
L5	16	25	32	40	63	70	90
L6	2	2	3	5	5	6	7
L7	4	6	8	10	12	15	20
L8	111.5	145	203	259	333	394	484
L9	4.5	4.8	7.2	10	12	15	15
L10	10	12.5	19	28	36	42	42
L11	-	26	26	26	40	41.5	52
L12	-	15	15	15	20	21.5	28
L13	-	21	22.5	23	33.5	33.5	45
C1[1]	46	70	100	130	165	215	235
C2[1]	M4 x 0.7P	M5 x 0.8P	M6 x 1P	M8 x 1.25P	M10 x 1.5P	M12 x 1.75P	M12 x 1.75P
C3[1]	≤11 / ≤12	≤14 / ≤16	≤19 / ≤24	≤32	≤38	≤48	≤55
C4[1]	25	34	40	50	60	85	116
C5[1]	30	50	80	110	130	180	200
C6[1]	3.5	8	4	5	6	6	6
C7[1]	42	60	90	115	142	190	220
C8[1]	29.5	19	17	19.5	22.5	29	63
C9[1]	90.5	111.5	152.5	191.5	235.5	303.5	378.5
C10[1]	8.75	13.5	10.75	13	15	20.75	53
B1 h9	5	5	6	10	12	16	20
H1	15	18	24.5	35	43	59	79.5
X DIN5480	-	W16x0.8x 30x18x6m	W22x1.25x 30x16x6m	W32x1.25x 30x24x6m	W40x2x 30x18x6m	W55x2x 30x26x6m	W70x2x 30x34x6m

1. C1~C10 are motor specific dimensions (metric std shown). Refer to www.apexdyna.com and Design Tool to view your specific motor mounting system.

Dimensions (2-stage, Ratio i=12~200) / ABR Series

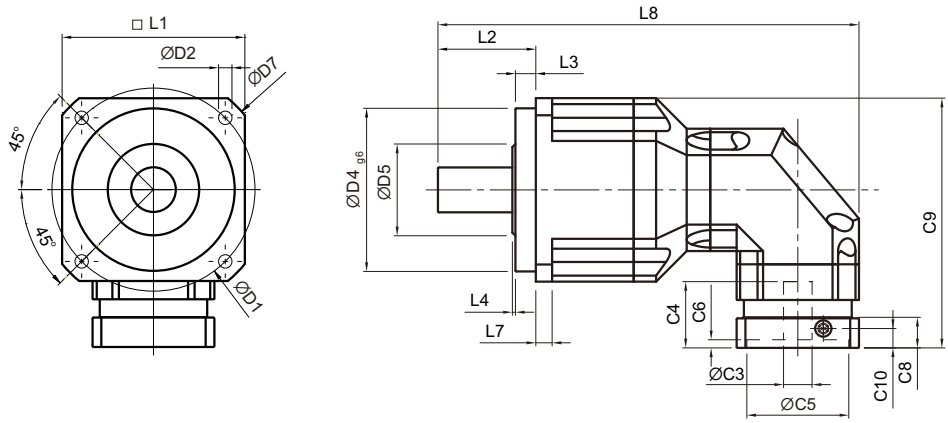

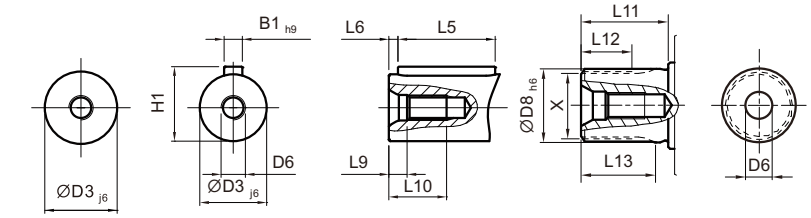

Shaft Option S1 **Shaft Option S2** **Shaft Option S3**

ABR060A / ABR090A / ABR115A / ABR142A

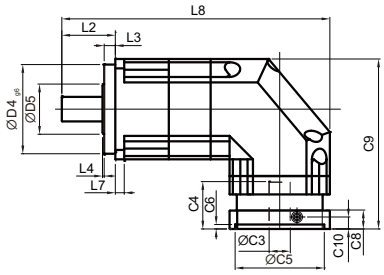

[unit: mm]

Dimension	ABR042	ABR060	ABR060A	ABR090	ABR090A	ABR115	ABR115A	ABR142	ABR142A	ABR180	ABR220
D1	50	70		100		130		165		215	250
D2	3.4	5.5		6.6		9		11		13	17
D3 j6	13	16		22		32		40		55	75
D4 g6	35	50		80		110		130		160	180
D5	22	45		65		95		75		95	115
D6	M4 x 0.7P	M5 x 0.8P		M8 x 1.25P		M12x1.75P		M16x2P		M20x2.5P	M20x2.5P
D7	56	80		116		152		185		240	292
D8 h6	-	16		22		32		40		55	75
L1	42	60		90		115		142		180	220
L2	26	37		48		65		97		105	138
L3	5.5	7		10		12		15		20	30
L4	1	1.5		1.5		2		3		3	3
L5	16	25		32		40		63		70	90
L6	2	2		3		5		5		6	7
L7	4	6		8		10		12		15	20
L8	139	163.5	182	206.5	251	285	320	365	404.5	431	521
L9	4.5	4.8		7.2		10		12		15	15
L10	10	12.5		19		28		36		42	42
L11	-	26		26		26		40		41.5	52
L12	-	15		15		15		20		21.5	28
L13	-	21		22.5		23		33.5		33.5	45
C1[2]	46	46	70	70	100	100	130	130	165	165	215
C2[2]	M4 x 0.7P	M4 x 0.7P	M5 x 0.8P	M5x0.8P	M6x1P	M6x1P	M8x1.25P	M8x1.25P	M10x1.5P	M10x1.5P	M12x1.75P
C3[2]	≤11 / ≤12	≤11 / ≤12	≤14 / ≤16	≤14 / ≤15.875 / ≤16	≤19 / ≤24	≤19 / ≤24	≤32	≤32	≤38	≤38	≤48
C4[2]	25	25	34	34	40	40	50	50	60	60	85
C5[2]	30	30	50	50	80	80	110	110	130	130	180
C6[2]	3.5	3.5	8	8	4	4	5	5	6	6	6
C7[2]	42	42	60	60	90	90	115	115	142	142	190
C8[2]	29.5	29.5	19	19	17	17	19.5	19.5	22.5	22.5	29
C9[2]	90.5	99.5	111.5	126.5	152.5	165	191.5	205	235.5	254.5	323.5
C10[2]	8.75	8.75	13.5	13.5	10.75	10.75	13	13	15	15	20.75
B1 h9	5	5		6		10		12		16	20
H1	15	18		24.5		35		43		59	79.5
X DIN5480	-	W16x0.8x 30x18x6m		W22x1.25x 30x16x6m		W32x1.25x 30x24x6m		W40x2x 30x18x6m		W55x2x 30x26x6m	W70x2x 30x34x6m

2. C1~C10 are motor specific dimensions (metric std shown). Refer to www.apexdyna.com and Design Tool to view your specific motor mounting system.

Selection of the Optimum Gearbox

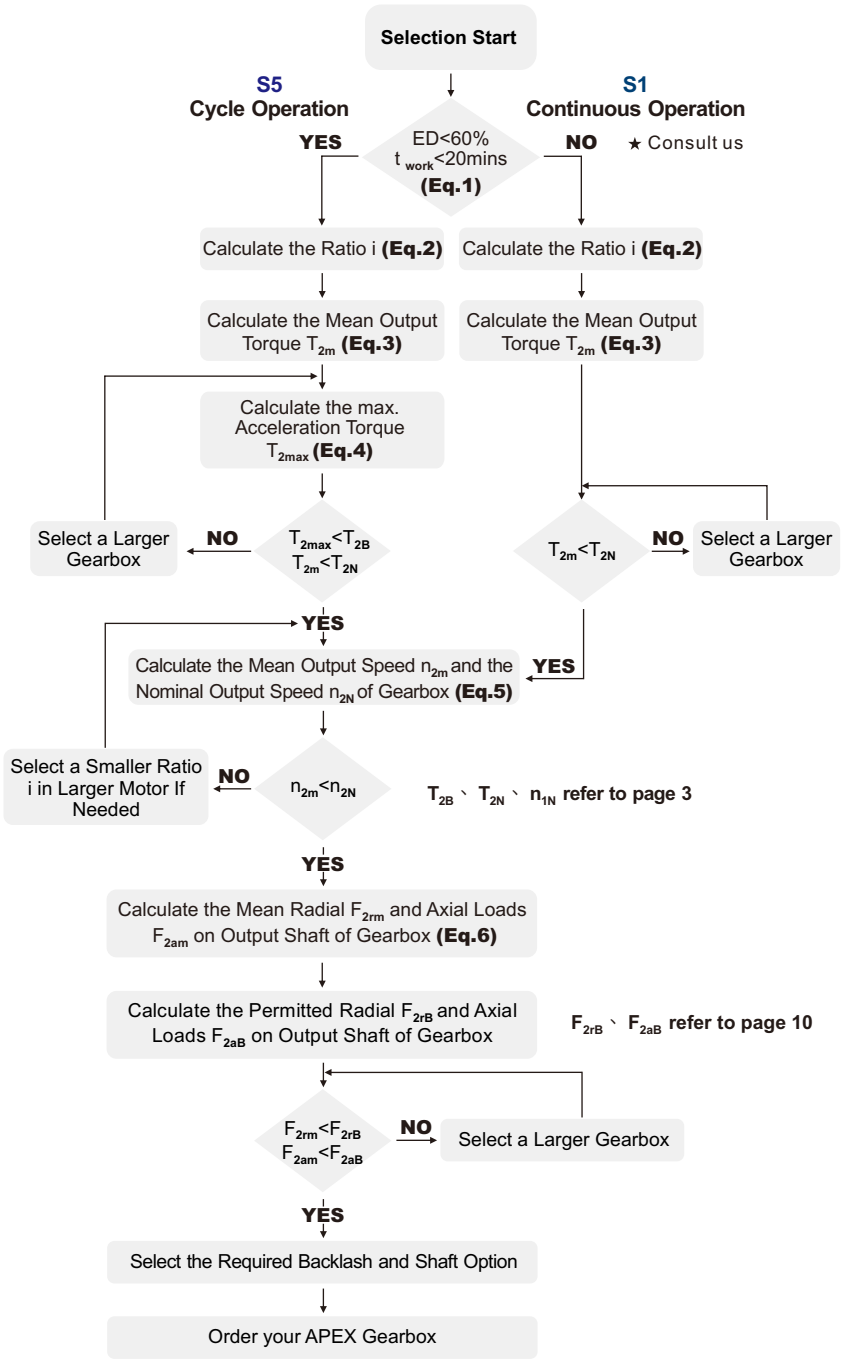

Recommended (for S5 Cycle Operation)

The general design is given for

$\frac{J_L}{i^2} \leq 4 \times J_m$

The optimal design is given for

$\frac{J_L}{i^2} \cong J_m$

J_L Load Inertia

J_m Motor Inertia

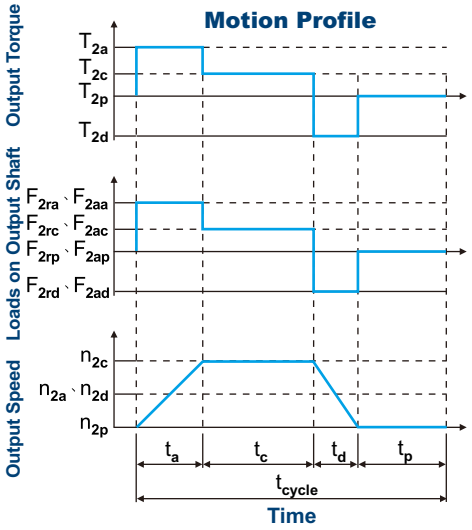

1. $ED = \frac{t_a + t_c + t_d}{t_{cycle}} \times 100\%$, $t_{work} = t_a + t_c + t_d$

Index : a. Acceleration, c. Constant,
d. Deceleration, p. Pause **(Eq.1)**

2. $i \cong \frac{n_m}{n_{work}}$

n_m Output Speed of the Motor

n_{work} Working Speed **(Eq.2)**

3. $T_{2m} = \sqrt[3]{\frac{n_{2a} \times t_a \times T_{2a}^{\ 3} + n_{2c} \times t_c \times T_{2c}^{\ 3} + n_{2d} \times t_d \times T_{2d}^{\ 3}}{n_{2a} \times t_a + n_{2c} \times t_c + n_{2d} \times t_d}}$

(Eq.3)

4. $T_{2max} = T_{mB} \times i \times k_s \times \eta$

where K_s is

K_s	No. of Cycles / hr
1.0	0 ~ 1,000
1.1	1,000 ~ 1,500
1.3	1,500 ~ 2,000
1.6	2,000 ~ 3,000
1.8	3,000 ~ 5,000

T_{mB} Max. Output Torque of the Motor

η Efficiency of the Gearbox **(Eq.4)**

5. $n_{2a} = n_{2d} = \frac{1}{2} \times n_{2c}$

$n_{2m} = \frac{n_{2a} \times t_a + n_{2c} \times t_c + n_{2d} \times t_d}{t_a + t_c + t_d}$

$n_{2N} = \frac{n_{1N}}{i}$ **(Eq.5)**

6. $F_{2rm} = \sqrt[3]{\frac{n_{2a} \times t_a \times F_{2ra}^{\ 3} + n_{2c} \times t_c \times F_{2rc}^{\ 3} + n_{2d} \times t_d \times F_{2rd}^{\ 3}}{n_{2a} \times t_a + n_{2c} \times t_c + n_{2d} \times t_d}}$

$F_{2am} = \sqrt[3]{\frac{n_{2a} \times t_a \times F_{2aa}^{\ 3} + n_{2c} \times t_c \times F_{2ac}^{\ 3} + n_{2d} \times t_d \times F_{2ad}^{\ 3}}{n_{2a} \times t_a + n_{2c} \times t_c + n_{2d} \times t_d}}$ **(Eq.6)**

Permitted Radial and Axial Loads

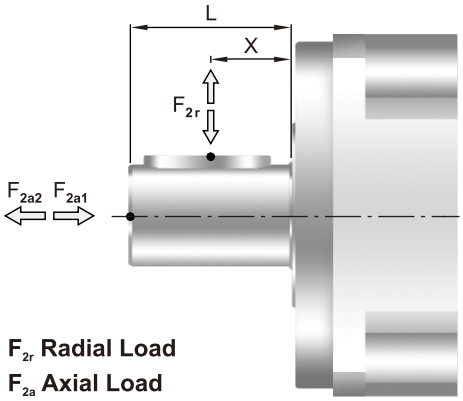

F_{2r} Radial Load
F_{2a} Axial Load

The permitted radial and axial loads on output shaft of the gearbox depend on the design of the gearbox supporting bearings.
APEX use the extension straddle oversized ball bearing design.
It can take heavy load from both axes.

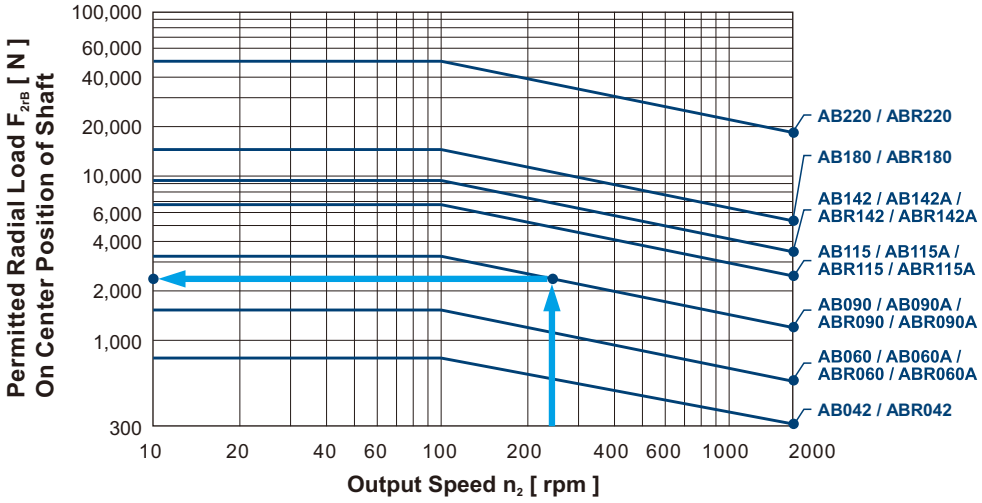

If radial force F_{2r} exert on the center of the output shaft X=1/2 x L.
Under various operating condition the lifetime is over 20,000* hours.
The permitted radial load is given on left diagram.

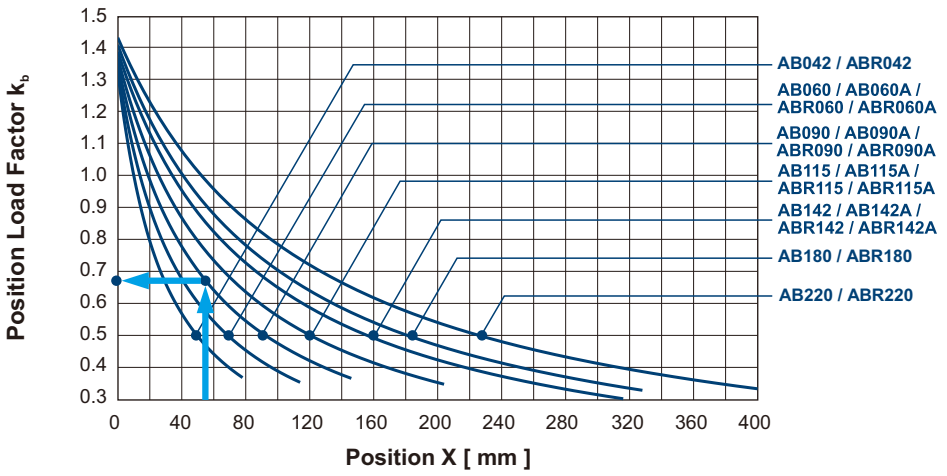

If radial force F_{2r} not exert on the center of the output shaft X<1/2 x L or X>1/2 x L
The permitted radial and axial load can be calculated by the position load factor K_b on the left diagram.

★ S1 service life 10,000 hrs