APEX DYNAMICS, INC.

HIGH PRECISION PLANETARY GEARBOX

AFH / AFHK Series



Gearbox Series - AFH / AFHK

Features:

High Torque
Optimized Output Torque & Inertia Moment
High Precision / Low Backlash
Long Service Life
Low Noise
Limited Temperature Rise



Ordering Code - AFH / AFHK Series

AFH090	—	003	—	S1	/	MOTOR
						Motor Type
						Shaft Type
						Ratio
						Gearbox Size

Gearbox Size

AFH	060 / 075 / 100 / 140 / 180 / 210 / 240
AFHK	060 / 075 / 100 / 140 / 180 / 210 / 240

Ratio[1]

AFH	(1 Stg.)	3 / 4 / 5 / 7 / 10
	(2 Stg.)	16 / 20 / 25 / 28 / 35 / 40 / 50 / 70 / 100
AFHK	(2 Stg.)	12 / 16 / 20 / 25 / 28 / 35 / 40 / 50 / 70 / 100
AFHKA	(3 Stg.)	100 / 125 / 140 / 175 / 200 / 250 / 350 / 400 / 500 / 700 / 1,000
AFHKB	(3 Stg.)	48 / 64 / 84 / 100 / 125 / 140 / 175 / 200 / 250 / 280 / 350 / 400 / 500 700 / 1,000
AFHK	(4 Stg.)	1,225 / 1,400 / 1,750 / 2,000 / 2,800 / 3,500 / 5,000 / 7,000 / 10,000
AFHKC	(2 Stg.)	4 / 5 / 7 / 8 / 10

Shaft Type : S1 = Smooth Output Shaft
S2 = Output Shaft with Key
S3 = DIN5480 Output Shaft
S4 = Hollow Output Shaft

Motor Type : Manufacturer and Model

(1) Ratio ($I = N_{in} / N_{out}$) .

©2018 by APEX DYNAMICS, INC.
APEX DYNAMICS, INC. reserves modification and copyrights of all technical specifications, illustrations and drawings in this catalog in allowance for continuous products development and advancement.
For the newest data and information, please visit http://www.apexdyna.com/

Performance - AFH Gearbox

Model No.		Stage	Ratio[1]	AFH 060	AFH 075	AFH 100	AFH 140	AFH 180	AFH 210	AFH 240
Nominal Output Torque T_{2N}	Nm	1	3	85	150	415	630	1,485	2,255	4,090
			4	95	195	350	600	1,290	1,960	3,715
			5	80	165	305	525	1,145	1,745	3,285
			7	60	130	250	435	980	1,495	2,525
			10	24	55	160	305	700	1,070	1,810
		2	16	95	195	360	615	1,320	2,000	3,785
			20	95	200	360	615	1,320	2,000	3,800
			25	80	165	310	535	1,165	1,770	3,330
			28	60	200	360	615	1,325	2,000	3,800
			35	70	170	310	535	1,165	1,775	3,335
			40	40	96	220	615	1,215	2,000	3,805
			50	50	120	275	535	1,170	1,775	3,340
			70	60	130	250	440	990	1,510	2,550
			100	24	55	160	295	660	1,005	1,700
Emergency Stop Torque T_{2NOT}	Nm	1,2	3~100	3 times T_{2N}						
Max. Acceleration Torque T_{2B}	Nm	1,2	3~100	1.5 times T_{2N}						
No Load Running Torque[2]	Nm	1	3~10	0.3	0.6	1.4	2.5	5	7	11
		2	16~100	0.2	0.3	0.5	1.2	1.7	3	4
Backlash[3]	arcmin	1	3~10	≦ 2	≦ 1	≦ 1	≦ 1	≦ 1	≦ 1	≦ 1
		2	16~100	≦ 3	≦ 2	≦ 2	≦ 2	≦ 2	≦ 2	≦ 2
Torsional Rigidity	Nm/arcmin	1,2	3~100	4.6	10	30	55	175	400	550
Nominal Input Speed n_{1N}	rpm	1	3~10	5,000	3,600	3,600	3,000	2,700	2,400	2,100
		2	16~100	5,000	4,600	4,600	4,000	3,700	3,400	3,100
Max. Input Speed n_1	rpm	1	3~10	7,000	6,000	6,000	5,000	4,500	4,000	3,500
		2	16~100	7,000	7,000	7,000	6,000	5,500	5,000	4,500
Max. Radial Load F_{2r} [4]	N	1,2	3~100	3,000	4,500	6,700	10,000	15,000	22,000	30,000
Max. Axial Load F_{2a} [4]	N	1,2	3~100	1,500	2,250	3,350	5,000	7,500	11,000	15,000
Max. Tilting Moment M_{2k} [4]	Nm	1,2	3~100	160	270	550	1,050	1,740	3,350	5,420
Service Life[5]	hr	1,2	3~100	20,000						
Operating Temp.	° C	1,2	3~100	-10° C~ 90° C						
Degree of Gearbox Protection		1,2	3~100	IP65						
Lubrication		1,2	3~100	Synthetic lubrication grease						
Mounting Position		1,2	3~100	All directions						
Running Noise[6]	dB(A)	1	3~10	≦ 58	≦ 59	≦ 64	≦ 65	≦ 66	≦ 66	≦ 66
		2	16~100	≦ 58	≦ 59	≦ 60	≦ 63	≦ 66	≦ 66	≦ 66
Efficiency η	%	1	3~10	≧ 97%						
		2	16~100	≧ 94%						

(1) Ratio ($i = N_{in} / N_{out}$) .

(2) These values are measured by gearbox with ratio 10 (1-stage) or ratio 100 (2-stage) at 3,000 rpm no loading.

(3) Backlash is measured at 2% of Nominal Output Torque T_{2N}.

(4) Applied to the output shaft center at 100 rpm.

(5) Continuous operation is not recommended.

(6) These values are measured by gearbox with ratio 10 (1-stage) or ratio 100 (2-stage) at 3,000 rpm no loading.
By lower ratio and/or higher RPM, the noise level could be 3 to 5 dB higher.

Inertia - AFH Gearbox

Model No.		AFH 060		AFH 075		AFH 100		AFH 140	
(C3) Ø (A)	Stage	1	2	1	2	1	2	1	2
8	kg.cm²	–	0.1	–	–	–	–	–	–
11		0.21	0.16	–	0.17	–	–	–	–
14		0.24	0.2	0.54	0.21	–	0.42	–	–
19		0.64	–	0.79	0.6	2.51	0.66	–	1.83
24		–	–	4.06	–	4.78	3.94	6.85	4.11
28		–	–	–	–	6.15	–	8.38	5.48
32		–	–	–	–	8.03	–	10.41	7.36
35		–	–	–	–	14.72	–	15.56	14.04
38		–	–	–	–	17.38	–	20.43	16.71
42		–	–	–	–	–	–	25.44	–
48		–	–	–	–	–	–	54.66	–
55		–	–	–	–	–	–	–	–
60		–	–	–	–	–	–	–	–

Model No.		AFH 180		AFH 210		AFH 240	
(C3) Ø (A)	Stage	1	2	1	2	1	2
8	kg.cm²	–	–	–	–	–	–
11		–	–	–	–	–	–
14		–	–	–	–	–	–
19		–	–	–	–	–	–
24		–	4.61	–	–	–	–
28		–	6.14	–	–	–	–
32		19.5	8.17	–	10.55	–	–
35		26.71	15.54	39.6	17.75	86.48	20.8
38		29.11	18.19	42.43	20.17	86.48	23.66
42		34.35	23.20	47.65	25.4	92.61	28.88
48		64.13	52.42	77.41	55.18	122.26	58.64
55		–	–	111.26	–	156.7	92.48
60		–	–	–	–	180.17	–

(A) Ø = Input shaft diameter.

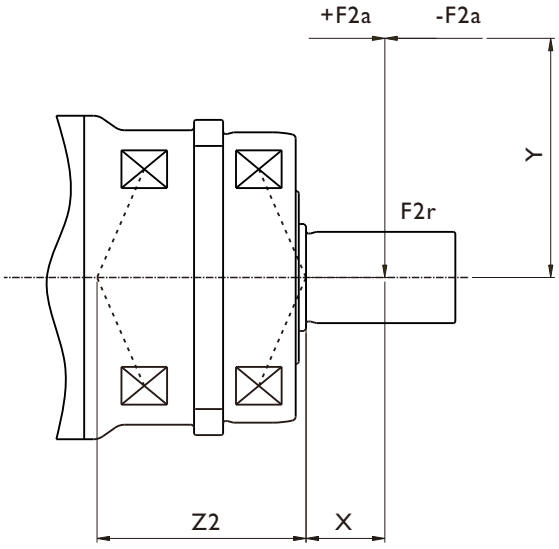

$$\text{Max. Tilting Moment } M_{2K} = \frac{F2a * Y + F2r * (X+Z2)}{1000}$$

M_{2K} : 【Nm】
F2a, F2r : 【N】
X, Y, Z2 : 【mm】

AFH / AFHK	060	075	100	140	180	210	240
Z2 【mm】	41.3	50.1	58.9	72.7	93.7	98.5	112.2

Applied to the output shaft center at 100 rpm.

Dimension - AFH Gearbox

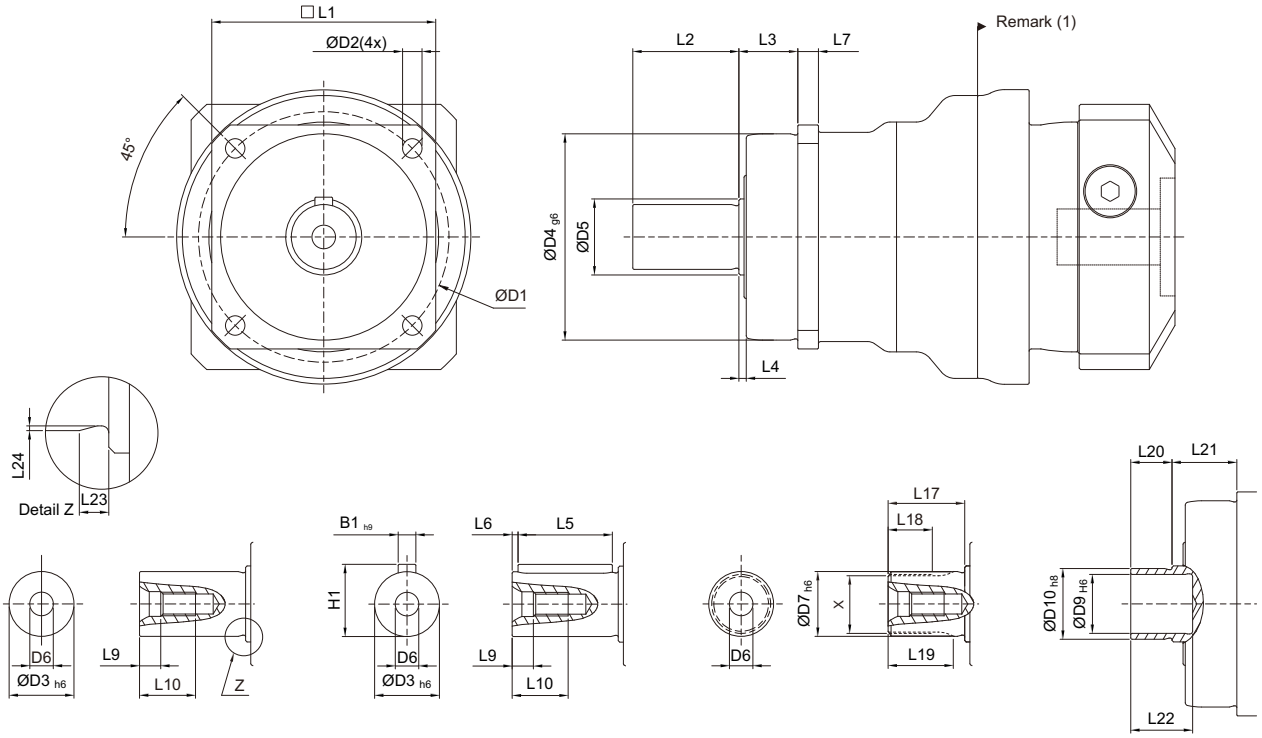

Shaft Option S1 **Shaft Option S2** **Shaft Option S3** **Shaft Option S4**

Dimension	AFH 060	AFH 075	AFH 100	AFH 140	AFH 180	AFH 210	AFH 240
D1	68	85	120	165	215	250	290
D2	5.5	7	9	11	13.5	17	17
D3 h6	16	22	32	40	55	75	85
D4 g6	60	70	90	130	160	180	200
D5	18.5	25.8	36.8	55.2	69.2	82.2	92.2
D6	M5×0.8P	M8×1.25P	M12×1.75P	M16×2P	M20×2.5P	M20×2.5P	M20×2.5P
D7 h6	16	22	32	40	55	75	85
D9 H6	15	20	30	40	55	-	-
D10 h8	18	24	36	50	68	-	-
L1	62	76	101	141	182	215	245
L2	28	36	58	82	82	105	130
L3	20	20	30	30	30	38	40
L4	2	2.5	3	3	3	3	3
L5	25	32	50	63	70	90	125
L6	2	2	4	5	6	7	3
L7	6	7	10	12	15	17	22
L9	4.8	7.2	10	12	15	15	15
L10	12.5	19	28	36	42	42	42
L17	26	26	26	40	41.5	52	60
L18	15	15	15	20	21.5	28	36
L19	21	22.5	23	33.5	33.5	45	53
L20	12	14	18	22	23	-	-
L21	22	22	32	33	32	-	-
L22	19	21	25	30	30	-	-
L23	2	2.5	2.5	2.5	2.5	2.5	4
L24	0.3	0.4	0.4	0.4	0.4	0.4	0.5
B1 h9	5	6	10	12	16	20	22
H1	18	24.5	35	43	59	79.5	90
X DIN5480	W16×0.8×30×18×6m	W22×1.25×30×16×6m	W32×1.25×30×24×6m	W40×2×30×18×6m	W55×2×30×26×6m	W70×2×30×34×6m	W80×2×30×38×6m

(1) Dimensions are related to motor interface. Please contact APEX for details.

Shrink Disc Power Lock

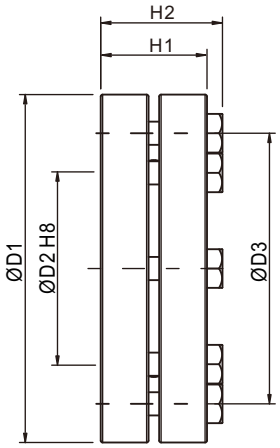

SHRINK DISC POWER LOCK

Diameter	Tolerance
≦ 30	H6 / j6
> 30 ~ 50	H6 / h6
> 50 ~ 80	H6 / g6

* For surface roughness Ra≦3.2 um

Model No. AFH / AFHK	D1	D2	D3	H1	H2	Screw(1) No x type	TA(2) [Nm]	J [Kg.cm²]	Order code
060	44	18	30	15	18.5	5 x M5	4	0.4	SSD-18
075	50	24	36	19.5	23	6 x M5	4	0.8	SSD-24
100	72	36	52	23.5	27.5	5 x M6	12	3.9	SSD-36
140	90	50	70	27.5	31.5	8 x M6	12	11.2	SSD-50
180	115	68	86	30.5	34.5	10 x M6	12	30.9	SSD-68

(1) 10.9 Class, DIN 931 (2) Tightening Torque

AFHK Gearbox Structure

(I)

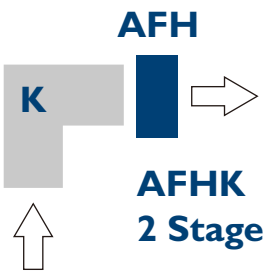

(II)



(III)

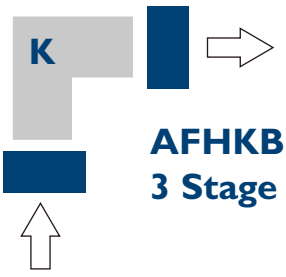

(IV)

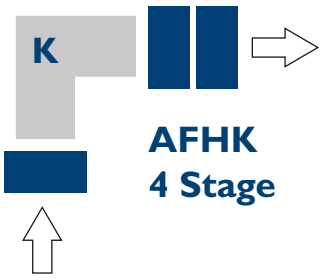

Performance - AFHK (2-Stage) Gearbox

Model No.		Stage	Ratio(1)	AFHK 060	AFHK 075	AFHK 100	AFHK 140	AFHK 180	AFHK 210	AFHK 240
Nominal Output Torque T_{2N}	Nm	2	12	95	195	360	615	1,315	1,680	3,280
			16	95	200	360	615	1,320	1,680	3,280
			20	95	200	360	615	1,320	1,775	3,335
			25	80	170	310	535	1,165	1,775	3,335
			28	92	200	360	615	1,325	1,560	3,000
			35	80	170	310	535	1,170	1,775	3,340
			40	60	160	340	615	1,325	1,440	2,400
			50	50	170	310	535	1,170	1,775	3,000
			70	60	130	250	440	990	1,510	2,550
			100	24	55	160	290	655	1,005	1,685
Emergency Stop Torque T_{2NOT}	Nm	2	12~100	2 times T_{2N}						
Max. Acceleration Torque T_{2B}	Nm	2	12~100	1.5 times T_{2N}						
No Load Running Torque(2)	Nm	2	12~100	1	1.3	2	3.1	6	13	16
Backlash(3)	arcmin	2	12~100	≦ 3	≦ 2	≦ 2	≦ 2	≦ 2	≦ 2	≦ 2
Torsional Rigidity	Nm/arcmin	2	12~100	4.6	10	30	55	175	300	510
Nominal Input Speed n_{1N}	rpm	2	12~100	3,000	3,000	2,800	2,700	2,200	2,100	2,000
Max. Input Speed n_{1B}	rpm	2	12~100	6,000	6,000	6,000	4,500	4,500	4,000	3,000
Max. Radial Load F_{2r}(4)	N	2	12~100	3,000	4,500	6,700	10,000	15,000	22,000	30,000
Max. Axial Load F_{2a}(4)	N	2	12~100	1,500	2,250	3,350	5,000	7,500	11,000	15,000
Max. Tilting Moment M_{2k}(4)	Nm	2	12~100	160	270	550	1,050	1,740	3,350	5,420
Service Life(5)	hr	2	12~100	20,000						
Operating Temp.	° C	2	12~100	-10° C~ 90° C						
Degree of Gearbox Protection		2	12~100	IP65						
Lubrication		2	12~100	Synthetic lubrication grease						
Mounting Position		2	12~100	All directions						
Running Noise(6)	dB(A)	2	12~100	≦ 64	≦ 66	≦ 68	≦ 68	≦ 70	≦ 70	≦ 72
Efficiency η	%	2	12~100	≧ 94%						

(1) Ratio ($i = N_{in} / N_{out}$) .

(2) These values are measured by gearbox with ratio 100 (2-stage) at 3,000 rpm no loading.

(3) Backlash is measured at 2% of Nominal Output Torque T_{2N}.

(4) Applied to the output shaft center at 100 rpm.

(5) Continuous operation is not recommended.

(6) These values are measured by gearbox with ratio 100 (2-stage) at 3,000 rpm no loading.
By lower ratio and/or higher RPM, the noise level could be 3 to 5 dB higher.

Inertia - AFHK (2-Stage) Gearbox

(C3) Ø(A) \ Model No.		AFHK 060	AFHK 075	AFHK 100	AFHK 140	AFHK 180	AFHK 210	AFHK 240
8	kg.cm²	0.1	–	–	–	–	–	–
11		0.16	0.17	–	–	–	–	–
14		0.2	0.37	0.41	–	–	–	–
19		–	0.6	1.61	1.61	–	–	–
24		–	–	3.9	4.01	5.62	–	–
28		–	–	–	5.53	5.62	–	–
32		–	–	–	7.57	8.11	8.11	–
35		–	–	–	14.95	15.32	15.32	15.68
38		–	–	–	17.58	17.72	17.72	18.52
42		–	–	–	–	22.95	22.95	23.74
48		–	–	–	–	52.74	52.74	53.49
55		–	–	–	–	–	–	87.34

(A) Ø = Input shaft diameter.

Dimension - AFHK (2-Stage) Gearbox (Ratio i = 12~100)

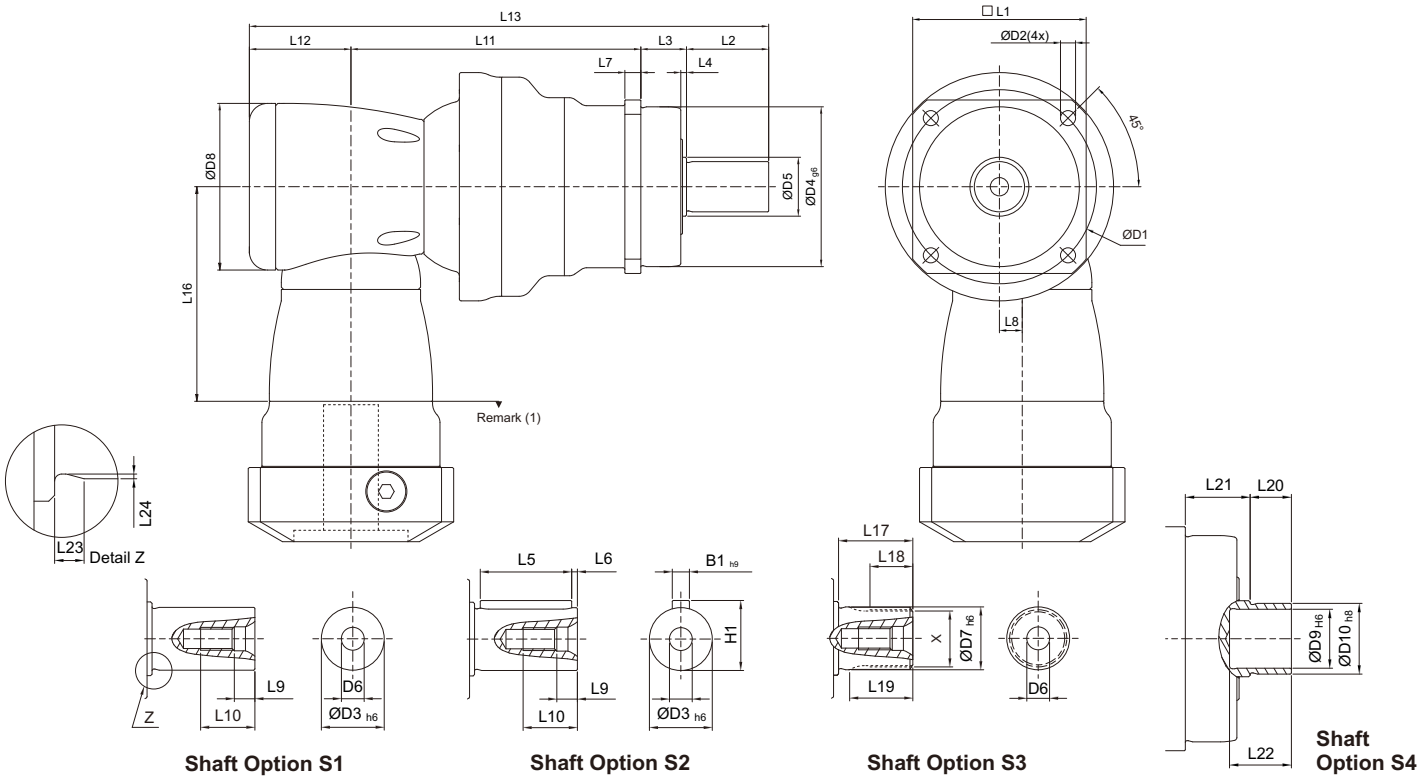

Shaft Option S1 | Shaft Option S2 | Shaft Option S3 | Shaft Option S4

Dimension	AFHK 060	AFHK 075	AFHK 100	AFHK 140	AFHK 180	AFHK 210	AFHK 240
D1	68	85	120	165	215	250	290
D2	5.5	7	9	11	13.5	17	17
D3 h6	16	22	32	40	55	75	85
D4 g6	60	70	90	130	160	180	200
D5	18.5	25.8	36.8	55.2	69.2	82.2	92.2
D6	M5 x 0.8P	M8 x 1.25P	M12 x 1.75P	M16 x 2P	M20 x 2.5P	M20 x 2.5P	M20 x 2.5P
D7 h6	16	22	32	40	55	75	85
D8	73	94	116	163	210	210	255
D9 H6	15	20	30	40	55	-	-
D10 h8	18	24	36	50	68	-	-
L1	62	76	101	141	182	215	245
L2	28	36	58	82	82	105	130
L3	20	20	30	30	30	38	40
L4	2	2.5	3	3	3	3	3
L5	25	32	50	63	70	90	125
L6	2	2	4	5	6	7	3
L7	6	7	10	12	15	17	22
L8	10	13	17	25	31	31	36
L9	4.8	7.2	10	12	15	15	15
L10	12.5	19	28	36	42	42	42
L11	118.5	135.5	152.5	191	248	270	336
L12	44.5	53	68.3	89	115	115	131
L13	211	244.5	308.8	392	475	528	637
L16	94	114.5	129	173.5	228	228	265.5
L17	26	26	26	40	41.5	52	60
L18	15	15	15	20	21.5	28	36
L19	21	22.5	23	33.5	33.5	45	53
L20	12	14	18	22	23	-	-
L21	22	22	32	33	32	-	-
L22	19	21	25	30	30	-	-
L23	2	2.5	2.5	2.5	2.5	2.5	4
L24	0.3	0.4	0.4	0.4	0.4	0.4	0.5
B1 h9	5	6	10	12	16	20	22
H1	18	24.5	35	43	59	79.5	90
X DIN5480	W16 x 0.8 x 30 x 18 x 6m	W22 x 1.25 x 30 x 16 x 6m	W32 x 1.25 x 30 x 24 x 6m	W40 x 2 x 30 x 18 x 6m	W55 x 2 x 30 x 26 x 6m	W70 x 2 x 30 x 34 x 6m	W80 x 2 x 30 x 38 x 6m

(1) Dimensions are related to motor interface. Please contact APEX for details.

Performance - AFHKA (3-Stage) Gearbox

Model No.		Stage	Ratio(1)	AFHKA 240
Nominal Output Torque T_{2N}	Nm	3	100	3,800
			125	3,345
			140	3,800
			175	3,345
			200	3,800
			250	3,345
			350	3,345
			500	3,345
			700	2,555
			1,000	1,650
Emergency Stop Torque T_{2NOT}	Nm	3	100~1,000	2 times T_{2N}
Max. Acceleration Torque T_{2B}	Nm	3	100~1,000	1.5 times T_{2N}
No Load Running Torque(2)	Nm	3	100~1,000	6
Backlash(3)	arcmin	3	100~1,000	≦ 2
Torsional Rigidity	Nm/arcmin	3	100~1,000	510
Nominal Input Speed n_{1N}	rpm	3	100~1,000	2,100
Max. Input Speed n_{1B}	rpm	3	100~1,000	4,000
Max. Radial Load F_{2r}(4)	N	3	100~1,000	30,000
Max. Axial Load F_{2a}(4)	N	3	100~1,000	15,000
Max. Tilting Moment M_{2k}(4)	Nm	3	100~1,000	5,420
Service Life(5)	hr	3	100~1,000	20,000
Operating Temp.	° C	3	100~1,000	-10° C~ 90° C
Degree of Gearbox Protection		3	100~1,000	IP65
Lubrication		3	100~1,000	Synthetic lubrication grease
Mounting Position		3	100~1,000	All directions
Running Noise(6)	dB(A)	3	100~1,000	≦ 72
Efficiency η	%	3	100~1,000	≧ 92%

(1) Ratio ($i = N_{in} / N_{out}$) .

(2) These values are measured by gearbox with ratio 1,000 (3-stage) at 3,000 rpm no loading.

(3) Backlash is measured at 2% of Nominal Output Torque T_{2N}.

(4) Applied to the output shaft center at 100 rpm.

(5) Continuous operation is not recommended.

(6) These values are measured by gearbox with ratio 1,000 (3-stage) at 3,000 rpm no loading.
By lower ratio and/or higher RPM, the noise level could be 3 to 5 dB higher.

Inertia - AFHKA (3-Stage) Gearbox

(C3) Ø(A) \ Model No.		AFHKA 240
32	kg.cm²	8.11
35		15.32
38		17.72
42		22.95
48		52.74

(A) Ø = Input shaft diameter.

Dimension - AFHKA (3-Stage) Gearbox (Ratio i = 100~1,000)

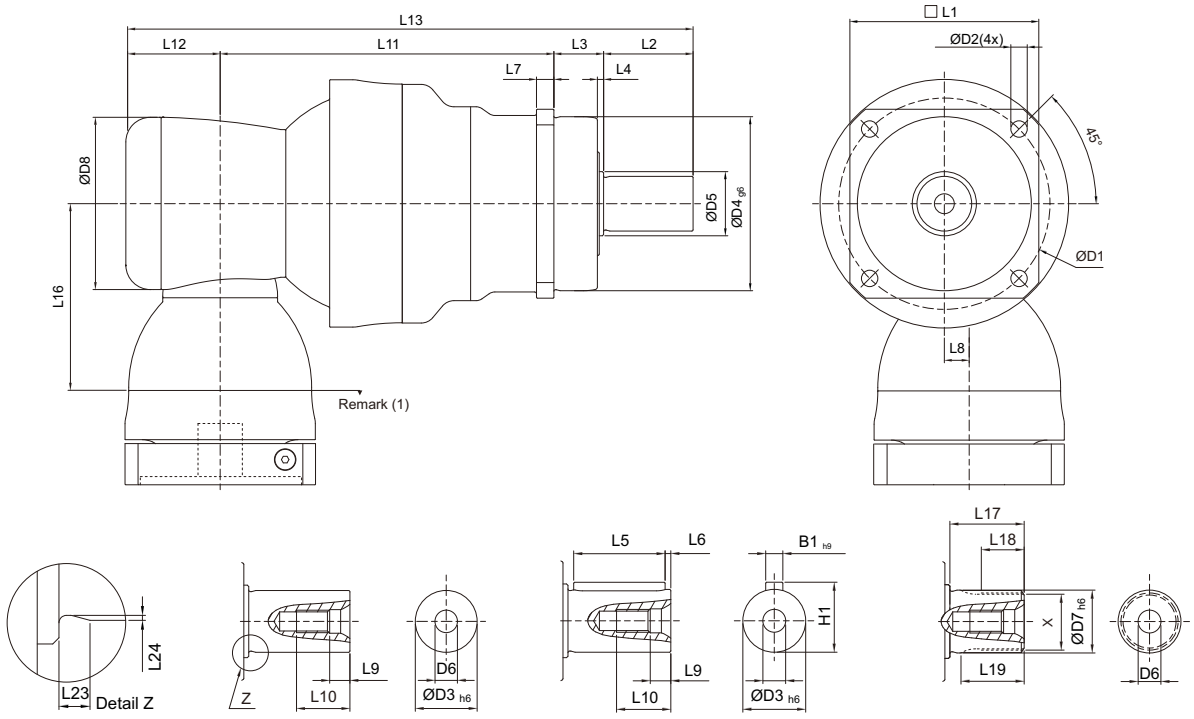

Shaft Option S1 **Shaft Option S2** **Shaft Option S3**

Dimension	AFHKA 240
D1	290
D2	17
D3 h6	85
D4 g6	200
D5	92.2
D6	M20 x 2.5P
D7 h6	85
D8	210
L1	245
L2	130
L3	40
L4	3
L5	125
L6	3
L7	22
L8	31
L9	15
L10	42
L11	378
L12	115
L13	663
L16	228
L17	60
L18	36
L19	53
L23	4
L24	0.5
B1 h9	22
H1	90
X DIN5480	W80 x 2 x 30 x 38 x 6m

(1) Dimensions are related to motor interface. Please contact APEX for details.

Performance - AFHKB (3-Stage) Gearbox

Model No.		Stage	Ratio(1)	AFHKB 075	AFHKB 100	AFHKB 140	AFHKB 180	AFHKB 210	AFHKB 240
Nominal Output Torque T_{2N}	Nm	3	48	–	–	–	–	–	3,280
			64	200	360	615	1,325	1,680	3,280
			84	200	360	620	1,325	1,680	–
			100	200	360	620	1,330	1,780	3,345
			125	170	310	535	1,170	1,780	3,345
			140	200	360	620	1,330	1,780	3,345
			175	170	310	535	1,170	1,780	3,345
			200	200	360	620	1,330	1,780	3,345
			250	170	310	535	1,170	1,780	3,345
			280	200	360	620	1,330	1,510	3,000
			350	170	310	535	1,170	1,775	3,345
			400	160	340	620	1,330	1,440	2,400
			500	170	310	535	1,170	1,780	3,000
			700	130	250	440	990	1,510	2,555
			1,000	55	160	290	640	980	1,655
Emergency Stop Torque T_{2NOT}	Nm	3	48~1,000	2 times T_{2N}					
Max. Acceleration Torque T_{2B}	Nm	3	48~1,000	1.5 times T_{2N}					
No Load Running Torque(2)	Nm	3	48~1,000	0.2	0.2	0.3	0.4	1	1.2
Backlash(3)	arcmin	3	48~1,000	≦ 2	≦ 2	≦ 2	≦ 2	≦ 2	≦ 2
Torsional Rigidity	Nm/arcmin	3	48~1,000	10	30	55	175	300	510
Nominal Input Speed n_{1N}	rpm	3	48~1,000	5,500	4,600	4,600	4,000	3,700	3,400
Max. Input Speed n_{1B}	rpm	3	48~1,000	7,000	7,000	7,000	6,000	5,500	5,000
Max. Radial Load F_{2r}(4)	N	3	48~1,000	4,500	6,700	10,000	15,000	22,000	30,000
Max. Axial Load F_{2a}(4)	N	3	48~1,000	2,250	3,350	5,000	7,500	11,000	15,000
Max. Tilting Moment M_{2k}(4)	Nm	3	48~1,000	270	550	1,050	1,740	3,350	5,420
Service Life(5)	hr	3	48~1,000	20,000					
Operating Temp.	° C	3	48~1,000	-10° C~ 90° C					
Degree of Gearbox Protection		3	48~1,000	IP65					
Lubrication		3	48~1,000	Synthetic lubrication grease					
Mounting Position		3	48~1,000	All directions					
Running Noise(6)	dB(A)	3	48~1,000	≦ 66	≦ 68	≦ 68	≦ 70	≦ 70	≦ 72
Efficiency η	%	3	48~1,000	≧ 92%					

(1) Ratio ($i = N_{in} / N_{out}$) .

(2) These values are measured by gearbox with ratio 1,000 (3-stage) at 3,000 rpm no loading.

(3) Backlash is measured at 2% of Nominal Output Torque T_{2N}.

(4) Applied to the output shaft center at 100 rpm.

(5) Continuous operation is not recommended.

(6) These values are measured by gearbox with ratio 1,000 (3-stage) at 3,000 rpm no loading.
By lower ratio and/or higher RPM, the noise level could be 3 to 5 dB higher.

Inertia - AFHKB (3-Stage) Gearbox

(C3) Ø(A) \ Model No.		AFHKB 075	AFHKB 100	AFHKB 140	AFHKB 180	AFHKB 210	AFHKB 240
8	kg.cm²	0.17	–	–	–	–	–
11		0.17	0.42	–	–	–	–
14		0.21	0.42	1.83	–	–	–
19		–	0.66	1.83	4.61	–	–
24		–	–	4.11	4.61	4.61	–
28		–	–	–	6.14	6.14	–
32		–	–	–	8.17	8.17	10.55
35		–	–	–	15.56	15.56	17.76
38		–	–	–	18.19	18.19	20.17
42		–	–	–	–	23.2	25.4
48		–	–	–	–	52.42	55.18

(A) Ø = Input shaft diameter.

Dimension - AFHKB (3-Stage) Gearbox (Ratio i = 48~1,000)

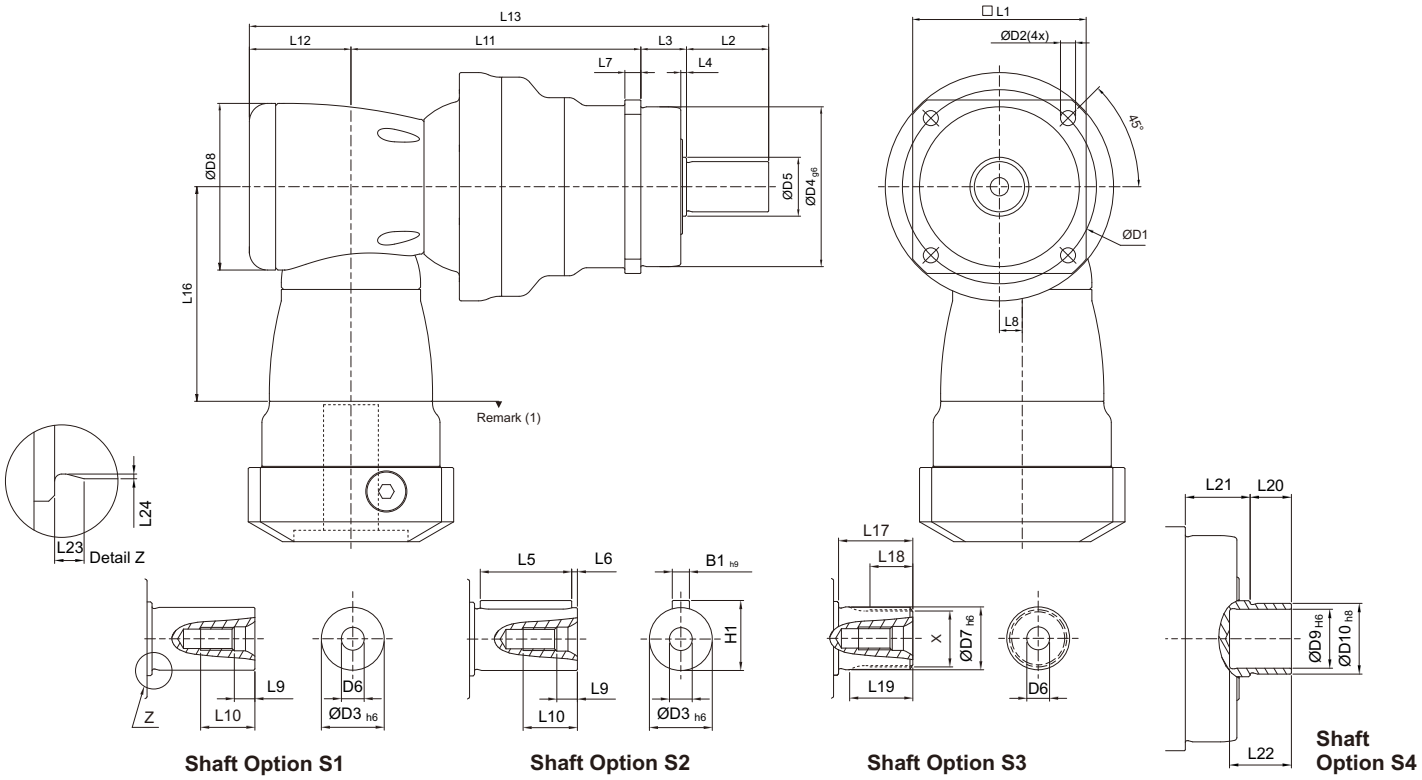

Shaft Option S1 | Shaft Option S2 | Shaft Option S3 | Shaft Option S4

Dimension	AFHKB 075	AFHKB 100	AFHKB 140	AFHKB 180	AFHKB 210	AFHKB 240
D1	85	120	165	215	250	290
D2	7	9	11	13.5	17	17
D3 h6	22	32	40	55	75	85
D4 g6	70	90	130	160	180	200
D5	25.8	36.8	55.2	69.2	82.2	92.2
D6	M8 x 1.25P	M12 x 1.75P	M16 x 2P	M20 x 2.5P	M20 x 2.5P	M20 x 2.5P
D7 h6	22	32	40	55	75	85
D8	94	116	163	210	210	255
D9 H6	20	30	40	55	-	-
D10 h8	24	36	50	68	-	-
L1	76	101	141	182	215	245
L2	36	58	82	82	105	130
L3	20	30	30	30	38	40
L4	2.5	3	3	3	3	3
L5	32	50	63	70	90	125
L6	2	4	5	6	7	3
L7	7	10	12	15	17	22
L8	13	17	25	31	31	36
L9	7.2	10	12	15	15	15
L10	19	28	36	42	42	42
L11	135.5	152.5	191	248	270	336
L12	53	68.3	89	115	115	131
L13	244.5	308.8	392	475	528	637
L16	114.5	129	173.5	228	228	265.5
L17	26	26	40	41.5	52	60
L18	15	15	20	21.5	28	36
L19	22.5	23	33.5	33.5	45	53
L20	14	18	22	23	-	-
L21	22	32	33	32	-	-
L22	21	25	30	30	-	-
L23	2.5	2.5	2.5	2.5	2.5	4
L24	0.4	0.4	0.4	0.4	0.4	0.5
B1 h9	6	10	12	16	20	22
H1	24.5	35	43	59	79.5	90
X DIN5480	W22 x 1.25 x 30 x 16 x 6m	W32 x 1.25 x 30 x 24 x 6m	W40 x 2 x 30 x 18 x 6m	W55 x 2 x 30 x 26 x 6m	W70 x 2 x 30 x 34 x 6m	W80 x 2 x 30 x 38 x 6m

(1) Dimensions are related to motor interface. Please contact APEX for details.

Performance - AFHK (4-Stage) Gearbox

Model No.		Stage	Ratio (1)	AFHK 240
Nominal Output Torque T_{2N}	Nm	4	1,225	3,350
			1,400	3,800
			1,750	3,350
			2,000	3,800
			2,800	2,555
			3,500	3,350
			5,000	3,350
			7,000	2,625
			10,000	1,975
Emergency Stop Torque T_{2NOT}	Nm	4	1,225~10,000	2 times T_{2N}
Max. Acceleration Torque T_{2B}	Nm	4	1,225~10,000	1.5 times T_{2N}
No Load Running Torque(2)	Nm	4	1,225~10,000	0.4
Backlash(3)	arcmin	4	1,225~10,000	≦ 2
Torsional Rigidity	Nm/arcmin	4	1,225~10,000	510
Nominal Input Speed n_{1N}	rpm	4	1,225~10,000	3,700
Max. Input Speed n_{1B}	rpm	4	1,225~10,000	5,500
Max. Radial Load F_{2r} (4)	N	4	1,225~10,000	30,000
Max. Axial Load F_{2a} (4)	N	4	1,225~10,000	15,000
Max. Tilting Moment M_{2k} (4)	Nm	4	1,225~10,000	5,420
Service Life(5)	hr	4	1,225~10,000	20,000
Operating Temp.	° C	4	1,225~10,000	-10° C~ 90° C
Degree of Gearbox Protection		4	1,225~10,000	IP65
Lubrication		4	1,225~10,000	Synthetic lubrication grease
Mounting Position		4	1,225~10,000	All directions
Running Noise(6)	dB(A)	4	1,225~10,000	≦ 72
Efficiency η	%	4	1,225~10,000	≧ 90%

(1) Ratio ($i = N_{in} / N_{out}$) .

(2) These values are measured by gearbox with ratio 10,000 (4-stage) at 3,000 rpm no loading.

(3) Backlash is measured at 2% of Nominal Output Torque T_{2N}.

(4) Applied to the output shaft center at 100 rpm.

(5) Continuous operation is not recommended.

(6) These values are measured by gearbox with ratio 10,000 (4-stage) at 3,000 rpm no loading.
By lower ratio and/or higher RPM, the noise level could be 3 to 5 dB higher.

Inertia - AFHK (4-Stage) Gearbox

(C3) Ø (A) \ Model No.		AFHK 240
24	kg.cm²	4.61
28		6.14
32		8.17
35		15.56
38		18.19

(A) Ø = Input shaft diameter.

Dimension - AFHK (4-Stage) Gearbox (Ratio i = 1,225~10,000)

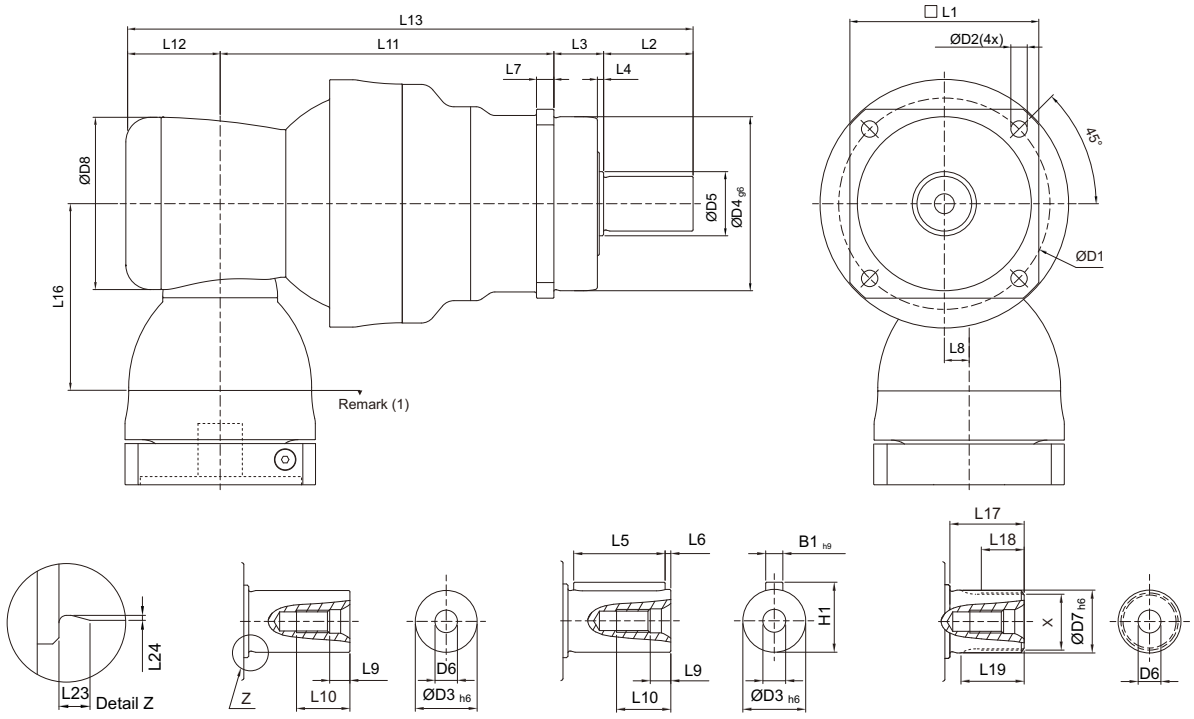

Shaft Option S1 **Shaft Option S2** **Shaft Option S3**

Dimension	AFHK 240
D1	290
D2	17
D3 h6	85
D4 g6	200
D5	92.2
D6	M20 x 2.5P
D7 h6	85
D8	210
L1	245
L2	130
L3	40
L4	3
L5	125
L6	3
L7	22
L8	31
L9	15
L10	42
L11	378
L12	115
L13	663
L16	228
L17	60
L18	36
L19	53
L23	4
L24	0.5
B1 h9	22
H1	90
X DIN5480	W80 x 2 x 30 x 38 x 6m

(1) Dimensions are related to motor interface. Please contact APEX for details.

Performance - AFHKC Gearbox

Model No.		Stage	Ratio(1)	AFHKC 060	AFHKC 075	AFHKC 100	AFHKC 140	AFHKC 180	AFHKC 210	AFHKC 240
Nominal Output Torque T_{2N}	Nm	2	4	95	195	355	605	1,300	1,975	3,750
			5	80	165	305	525	1,150	1,755	3,305
			7	60	130	250	440	985	1,500	2,535
			8	95	195	360	610	1,315	1,995	3,785
			10	80	165	310	530	1,160	1,765	3,325
Emergency Stop Torque T_{2NOT}	Nm	2	4~10	2 times T_{2N}						
Max. Acceleration Torque T_{2B}	Nm	2	4~10	1.5 times T_{2N}						
No Load Running Torque(2)	Nm	2	4~10	2	2.5	5.8	12	25	48	95
Backlash(3)	arcmin	2	4~10	≦ 3	≦ 2	≦ 2	≦ 2	≦ 2	≦ 2	≦ 2
Torsional Rigidity	Nm/arcmin	2	4~10	4.6	10	30	55	175	300	510
Nominal Input Speed n_{1N}	rpm	2	4~10	5,000	3,600	3,000	2,300	1,800	1,500	1,100
Max. Input Speed n_{1B}	rpm	2	4~10	7,000	6,000	5,500	4,500	3,500	3,000	2,200
Max. Radial Load F_{2r}(4)	N	2	4~10	3,000	4,500	6,700	10,000	15,000	22,000	30,000
Max. Axial Load F_{2a}(4)	N	2	4~10	1,500	2,250	3,350	5,000	7,500	11,000	15,000
Max. Tilting Moment M_{2k}(4)	Nm	2	4~10	160	270	550	1,050	1,740	3,350	5,420
Service Life(5)	hr	2	4~10	20,000						
Operating Temp.	° C	2	4~10	-10° C~ 90° C						
Degree of Gearbox Protection		2	4~10	IP65						
Lubrication		2	4~10	Synthetic lubrication grease						
Mounting Position		2	4~10	All directions						
Running Noise(6)	dB(A)	2	4~10	≦ 68	≦ 68	≦ 68	≦ 70	≦ 70	≦ 72	≦ 74
Efficiency η	%	2	4~10	≧ 95%						

(1) Ratio ($i = N_{in} / N_{out}$) .

(2) These values are measured by gearbox with ratio 10 (2-stage) at 3,000 rpm no loading.

(3) Backlash is measured at 2% of Nominal Output Torque T_{2N}.

(4) Applied to the output shaft center at 100 rpm.

(5) Continuous operation is not recommended.

(6) These values are measured by gearbox with ratio 10 (2-stage) at 3,000 rpm no loading.
By lower ratio and/or higher RPM, the noise level could be 3 to 5 dB higher.

Inertia - AFHKC Gearbox

(C3) Ø(A) \ Model No.		AFHKC 060	AFHKC 075	AFHKC 100	AFHKC 140	AFHKC 180	AFHKC 210	AFHKC 240
8	kg.cm²	0.1	–	–	–	–	–	–
11		0.16	0.41	–	–	–	–	–
14		0.20	0.41	–	–	–	–	–
19		0.58	1.61	1.61	–	–	–	–
24		–	3.9	4.01	5.62	–	–	–
28		–	–	5.53	5.62	–	–	–
32		–	–	7.57	8.11	8.11	–	–
35		–	–	14.95	15.32	15.32	15.68	19.37
38		–	–	17.58	17.72	17.72	18.52	19.37
42		–	–	–	22.95	22.95	23.74	25.5
48		–	–	–	52.74	52.74	53.49	55.14
55		–	–	–	–	–	87.34	89.59
60		–	–	–	–	–	–	113.06

(A) Ø = Input shaft diameter.

Dimension - AFHKC Gearbox (Ratio i = 4~10)

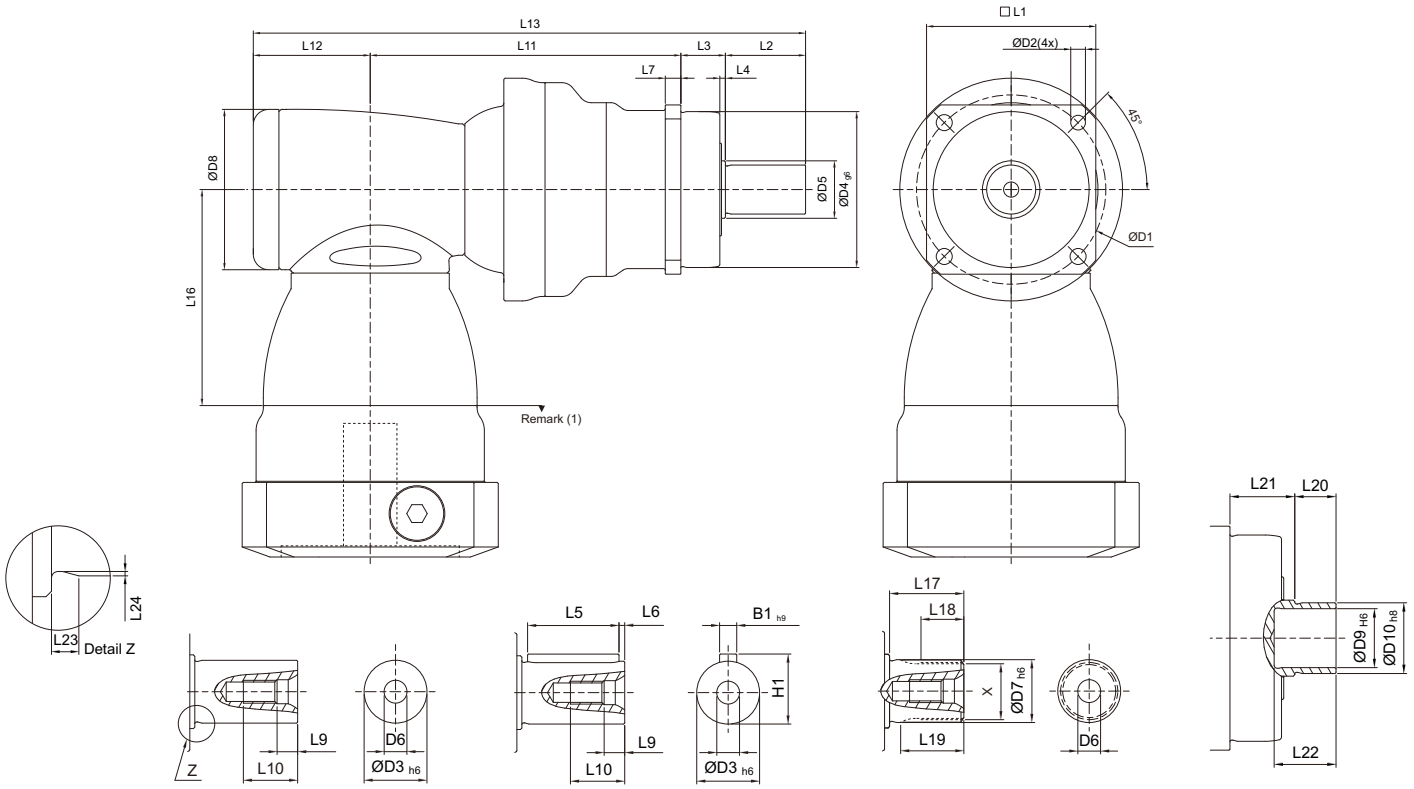

Shaft Option S1 | Shaft Option S2 | Shaft Option S3 | Shaft Option S4

Dimension	AFHKC 060	AFHKC 075	AFHKC 100	AFHKC 140	AFHKC 180	AFHKC 210	AFHKC 240
D1	68	85	120	165	215	250	290
D2	5.5	7	9	11	13.5	17	17
D3 h6	16	22	32	40	55	75	85
D4 g6	60	70	90	130	160	180	200
D5	18.5	25.8	36.8	55.2	69.2	82.2	92.2
D6	M5 x 0.8P	M8 x 1.25P	M12 x 1.75P	M16 x 2P	M20 x 2.5P	M20 x 2.5P	M20 x 2.5P
D7 h6	16	22	32	40	55	75	85
D8	64	92	116	156	156	195	240
D9 H6	15	20	30	40	55	-	-
D10 h8	18	24	36	50	68	-	-
L1	62	76	101	141	182	215	245
L2	28	36	58	82	82	105	130
L3	20	20	30	30	30	38	40
L4	2	2.5	3	3	3	3	3
L5	25	32	50	63	70	90	125
L6	2	2	4	5	6	7	3
L7	6	7	10	12	15	17	22
L9	4.8	7.2	10	12	15	15	15
L10	12.5	19	28	36	42	42	42
L11	121.5	145.5	163	219	258	277.5	352
L12	46.5	61.5	76	97.5	97.5	105.5	141
L13	216	263	327	428.5	467.5	526	663
L16	81.5	113.5	147.5	196.5	196.5	229	260
L17	26	26	26	40	41.5	52	60
L18	15	15	15	20	21.5	28	36
L19	21	22.5	23	33.5	33.5	45	53
L20	12	14	18	22	23	-	-
L21	22	22	32	33	32	-	-
L22	19	21	25	30	30	-	-
L23	2	2.5	2.5	2.5	2.5	2.5	4
L24	0.3	0.4	0.4	0.4	0.4	0.4	0.5
B1 h9	5	6	10	12	16	20	22
H1	18	24.5	35	43	59	79.5	90
X DIN5480	W16 x 0.8 x 30 x 18 x 6m	W22 x 1.25 x 30 x 16 x 6m	W32 x 1.25 x 30 x 24 x 6m	W40 x 2 x 30 x 18 x 6m	W55 x 2 x 30 x 26 x 6m	W70 x 2 x 30 x 34 x 6m	W80 x 2 x 30 x 38 x 6m

(1) Dimensions are related to motor interface. Please contact APEX for details.