APEX DYNAMICS, INC.

HIGH PRECISION PLANETARY GEARBOX

AFX / AFXR Series

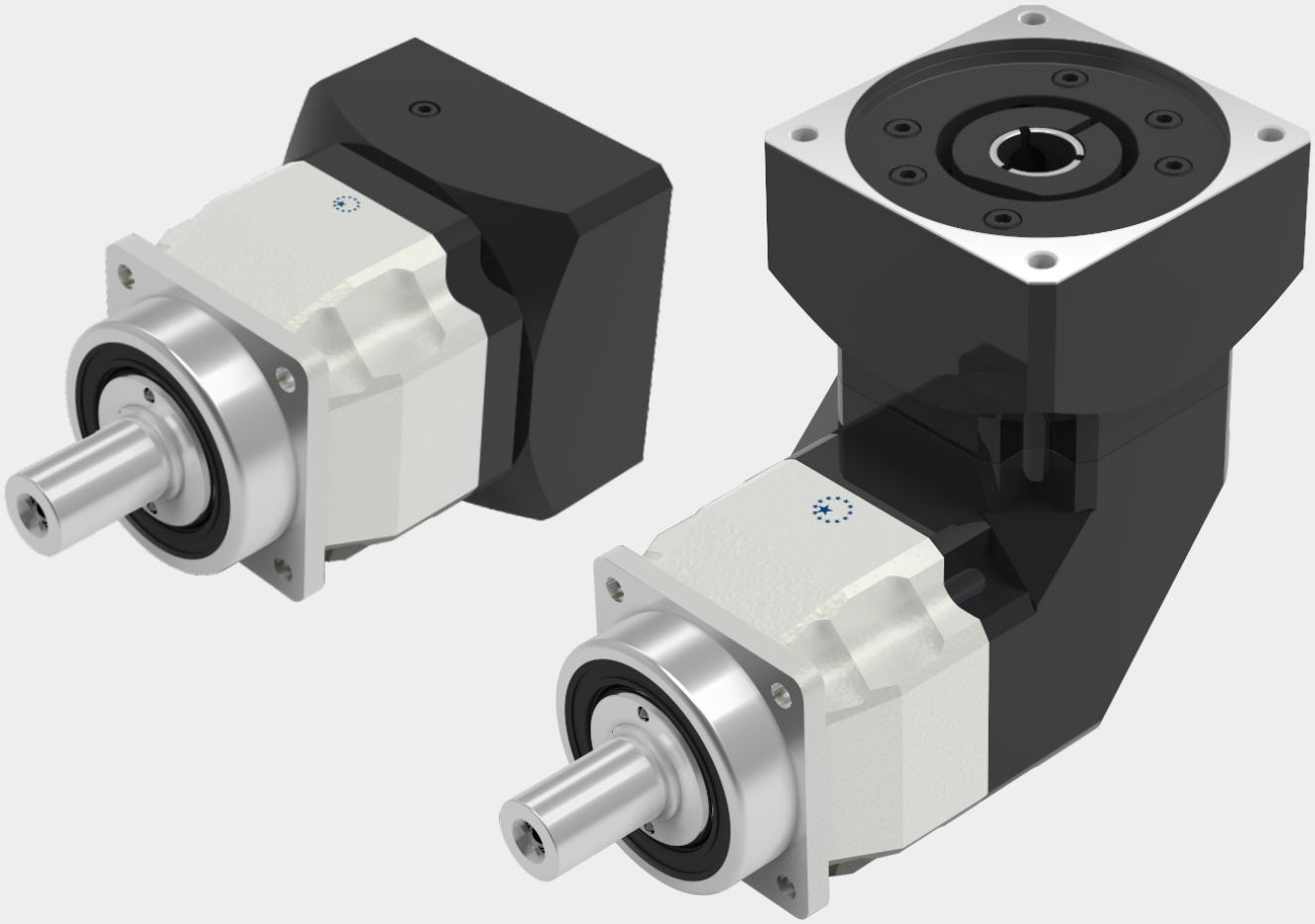

Stainless

AFX / AFXR Series

Features:

High Torque
High Precision
Long Service Life
Low Noise
Limited Temperature Rise
More Suitable for Continuous Running

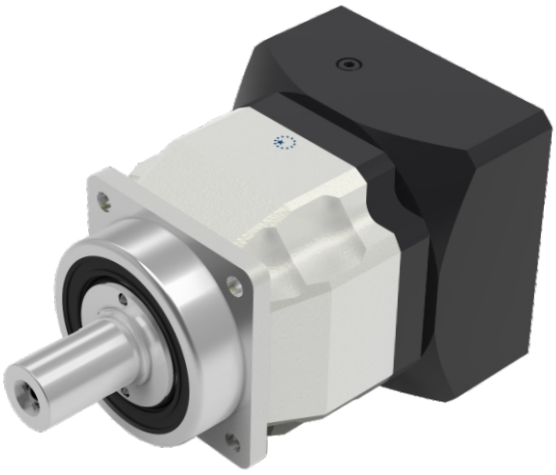

AFX

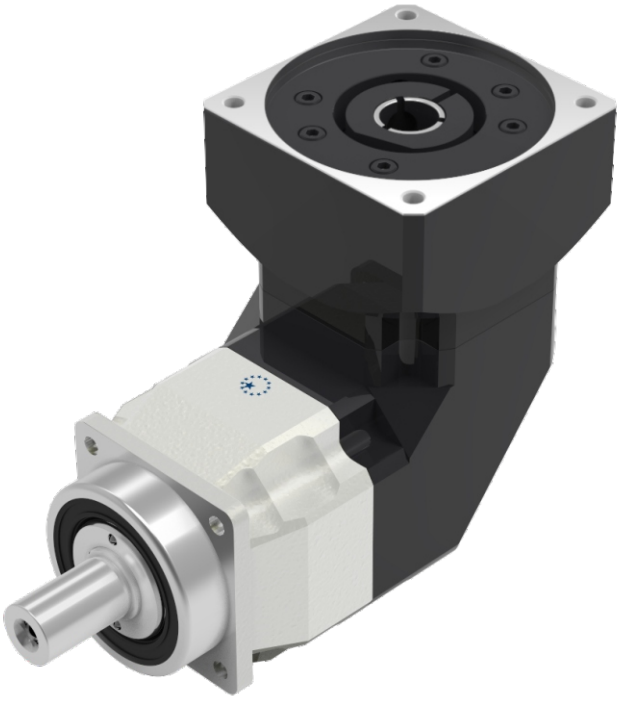

AFXR

AFX Series

AFX075	010	S1	P1	MOTOR

Gearbox Size:
AFX042, AFX060, AFX060A, AFX075, AFX075A, AFX100, AFX100 A, AFX140, AFX140A, AFX180

Shaft Option:
S1: Smooth Output Shaft
S2: Output Shaft with Key
S3: DIN 5480

Motor Designation:
Manufacturer Type
And Model

Ratio:
1 Stage: 3, 4, 5, 6, 7, 8, 9, 10
2 Stage: 12, 15, 16, 20, 25, 28, 30, 32, 35, 40, 45, 50, 60, 70, 80, 90, 100

Backlash:
P0: Micro Backlash
P1: Reduced Backlash
P2: Standard Backlash

Ordering Example: AFX075-010-S1-P1 / SIEMENS 1FT6 041-4AF71

AFXR Series

AFXR075	010	S1	P1	MOTOR

Gearbox Size:
AFXR042, AFXR060, AFXR060A, AFXR075, AFXR075A, AFXR100, AFXR100A, AFXR140, AFXR140 A, AFXR180

Shaft Option:
S1: Smooth Output Shaft
S2: Output Shaft with Key
S3: DIN 5480

Motor Designation:
Manufacturer Type
And Model

Ratio:
1 Stage: 3, 4, 5, 6, 7, 8, 9, 10, 12, 14, 16, 20
2 Stage: 12, 15, 16, 20, 25, 28, 30, 32, 35, 40, 45, 48, 50, 60, 64, 70, 80, 90, 100, 120, 140, 160, 180, 200

Backlash:
P0: Micro Backlash
P1: Reduced Backlash
P2: Standard Backlash

Ordering Example: AFXR075-010-S1-P1 / SIEMENS 1FT6 041-4AF71

©2018 by APEX DYNAMICS, INC.
APEX DYNAMICS, INC. reserves modification and copyrights of all technical specifications, illustrations and drawings in this catalog in allowance for continuous products development and advancement.
For the newest data and information, please visit http://www.apexdyna.com/

Specifications / AFX Series

Gearbox Performance

Model No.		Stages	Ratio[A]	AFX042[F]	AFX060	AFX060A	AFX075	AFX075A	AFX100	AFX100A	AFX140	AFX140A	AFX180
Nominal Output Torque T_{2N}	Nm	1	3	20	55	–	130	–	208	–	342	–	588
			4	19	50	–	140	–	290	–	542	–	1,050
			5	22	60	–	160	–	330	–	650	–	1,200
			6	20	55	–	150	–	310	–	600	–	1,100
			7	19	50	–	140	–	300	–	550	–	1,100
			8	17	45	–	120	–	260	–	500	–	1,000
			9	14	40	–	100	–	230	–	450	–	900
			10	14	40	–	100	–	230	–	450	–	900
		2	12	19	50	50	140	140	290	290	542	542	1,050
			15	20	55	55	130	130	208	208	342	342	588
			16	19	50	50	140	140	290	290	542	542	1,050
			20	19	50	50	140	140	290	290	542	542	1,050
			25	22	60	60	160	160	330	330	650	650	1,200
			28	19	50	50	140	140	300	300	550	550	1,100
			30	20	55	55	150	150	310	310	600	600	1,100
			32	17	45	45	120	120	260	260	500	500	1,000
			35	19	50	50	140	140	300	300	550	550	1,100
			40	17	45	45	120	120	260	260	500	500	1,000
			45	14	40	40	100	100	230	230	450	450	900
			50	22	60	60	160	160	330	330	650	650	1,200
			60	20	55	55	150	150	310	310	600	600	1,100
			70	19	50	50	140	140	300	300	550	550	1,100
			80	17	45	45	120	120	260	260	500	500	1,000
			90	14	40	40	100	100	230	230	450	450	900
			100	14	40	40	100	100	230	230	450	450	900
Emergency Stop Torque T_{2NOT}[B]	Nm	1,2	3~100	3 times of Nominal Output Torque									
Nominal Input Speed n_{1N}	rpm	1,2	3~100	5,000	5,000	5,000	4,000	4,000	4,000	4,000	3,000	3,000	3,000
Max. Input Speed n_{1B}	rpm	1,2	3~100	10,000	10,000	10,000	8,000	8,000	8,000	8,000	6,000	6,000	6,000
Micro Backlash P0	arcmin	1	3~10	–	–	–	≤1	–	≤1	–	≤1	–	≤1
		2	12~100	–	–	–	–	–	≤3	≤3	≤3	≤3	≤3
Reduced Backlash P1	arcmin	1	3~10	≤3	≤3	–	≤3	–	≤3	–	≤3	–	≤3
		2	12~100	≤5	≤5	≤5	≤5	≤5	≤5	≤5	≤5	≤5	≤5
Standard Backlash P2	arcmin	1	3~10	≤5	≤5	–	≤5	–	≤5	–	≤5	–	≤5
		2	12~100	≤7	≤7	≤7	≤7	≤7	≤7	≤7	≤7	≤7	≤7
Torsional Rigidity	Nm/arcmin	1,2	3~100	3	7	7	14	14	25	25	50	50	145
Max. Radial Load F_{2rB}[C]	N	1,2	3~100	610	2,900	2,900	4,500	4,500	7,800	7,800	9,450	9,450	15,600
Max. Axial Load F_{2aB}[C]	N	1,2	3~100	320	1,450	1,450	2,250	2,250	3,900	3,900	4,725	4,725	7,800
Service Life[D]	hr	1,2	3~100	30,000									
Efficiency η	%	1	3~10	≥97%									
		2	12~100	≥94%									
Weight	kg	1	3~10	0.6	1.7	–	3.5	–	7.4	–	15.8	–	32.7
		2	12~100	0.8	2	1.5	4	4.1	9	11.3	19.1	22.5	37.6
Operating Temperature	°C	1,2	3~100	-10°C~+90°C									
Lubrication		1,2	3~100	Synthetic lubrication oils									
Degree of Gearbox Protection		1,2	3~100	IP65									
Mounting Position		1,2	3~100	all directions									
Noise (n_1=3000rpm, i=10, No load)[E]	dB	1,2	3~100	≤56	≤58	≤60	≤60	≤63	≤63	≤65	≤65	≤67	≤67

A. Ratio ($i=N_{in} / N_{out}$)
B. Max. acceleration torque T_{2B} = 60% of T_{2NOT}
C. Applied to the output shaft center at 100 rpm
D. For continuous operation, the service life time is reduced
E. These values are measured by gearbox with ratio = 10 (1-stage) or ratio = 100 (2-stage) at 3,000 rpm no loading.
by lower ratio and / or higher RPM, the noise level could be 3 to 5 dB Higher.
F. Continuous operation is not supported.

Gearbox Inertia

Model No.		Stages	Ratio[1]	AFX042	AFX060	AFX060A	AFX075	AFX075A	AFX100	AFX100A	AFX140	AFX140A	AFX180
Mass Moments of Inertia J_1	kg・cm^2	1	3	0.03	0.16	–	0.61	–	3.25	–	9.21	–	28.98
			4	0.03	0.14	–	0.48	–	2.74	–	7.54	–	23.67
			5	0.03	0.13	–	0.47	–	2.71	–	7.42	–	23.29
			6	0.03	0.13	–	0.45	–	2.65	–	7.25	–	22.75
			7	0.03	0.13	–	0.45	–	2.62	–	7.14	–	22.48
			8	0.03	0.13	–	0.44	–	2.58	–	7.07	–	22.59
			9	0.03	0.13	–	0.44	–	2.57	–	7.04	–	22.53
			10	0.03	0.13	–	0.44	–	2.57	–	7.03	–	22.51
		2	12	0.03	0.03	0.16	0.16	0.61	0.61	3.25	3.25	9.21	9.21
			15	0.03	0.03	0.13	0.13	0.47	0.47	2.71	2.71	7.42	7.42
			16	0.03	0.03	0.14	0.14	0.48	0.48	2.74	2.74	7.54	7.54
			20	0.03	0.03	0.13	0.13	0.47	0.47	2.71	2.71	7.42	7.42
			25	0.03	0.03	0.13	0.13	0.47	0.47	2.71	2.71	7.42	7.42
			28	0.03	0.03	0.14	0.14	0.48	0.48	2.74	2.74	7.54	7.54
			30	0.03	0.03	0.13	0.13	0.47	0.47	2.71	2.71	7.42	7.42
			32	0.03	0.03	0.14	0.14	0.48	0.48	2.74	2.74	7.54	7.54
			35	0.03	0.03	0.13	0.13	0.47	0.47	2.71	2.71	7.42	7.42
			40	0.03	0.03	0.13	0.13	0.47	0.47	2.71	2.71	7.42	7.42
			45	0.03	0.03	0.13	0.13	0.47	0.47	2.71	2.71	7.42	7.42
			50	0.03	0.03	0.13	0.13	0.44	0.44	2.57	2.57	7.03	7.03
			60	0.03	0.03	0.13	0.13	0.44	0.44	2.57	2.57	7.03	7.03
			70	0.03	0.03	0.13	0.13	0.44	0.44	2.57	2.57	7.03	7.03
			80	0.03	0.03	0.13	0.13	0.44	0.44	2.57	2.57	7.03	7.03
			90	0.03	0.03	0.13	0.13	0.44	0.44	2.57	2.57	7.03	7.03
			100	0.03	0.03	0.13	0.13	0.44	0.44	2.57	2.57	7.03	7.03

Dimensions (1-stage, Ratio i=3~10) / AFX Series

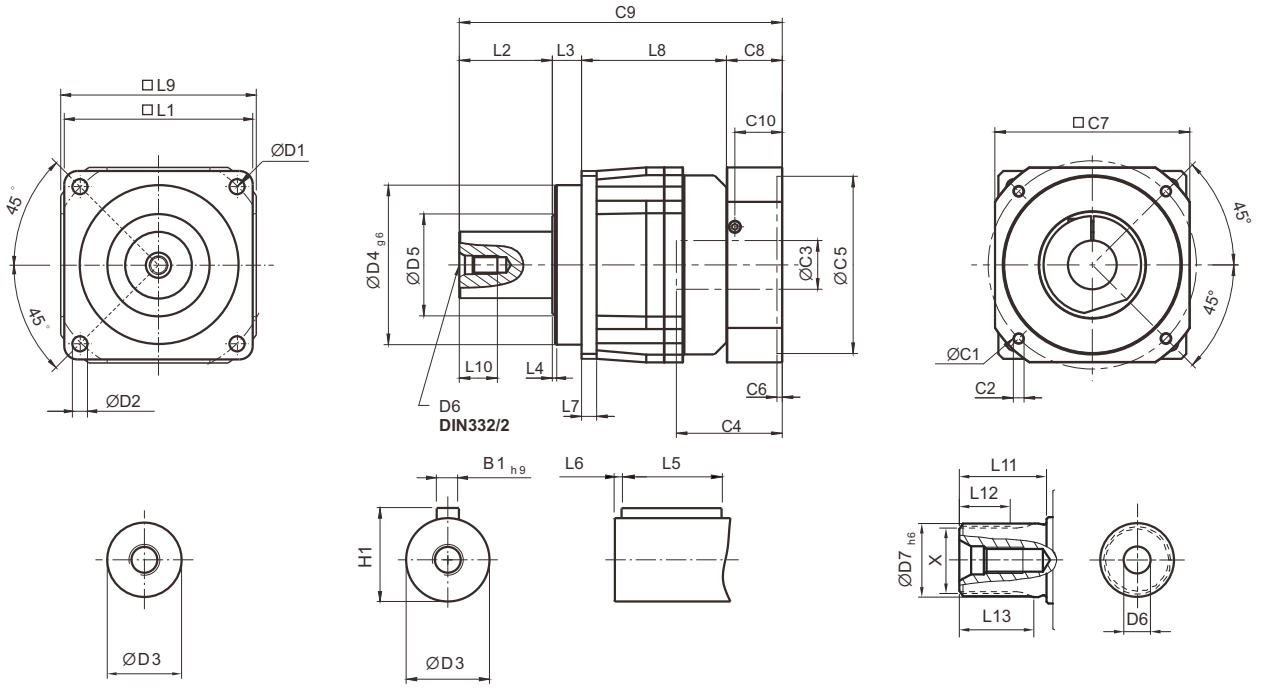

Shaft Option S1 **Shaft Option S2** **Shaft Option S3**

[unit: mm]

Dimension	AFX042	AFX060	AFX075	AFX100	AFX140	AFX180
D1	50	68	85	120	165	215
D2	3.4	5.5	6.8	9	11	13
D3	12 $_{j6}$	16 $_{h6}$	22 $_{h6}$	32 $_{h6}$	40 $_{h6}$	55 $_{h6}$
D4 g6	35	60	70	90	130	160
D5	22	21	30	40	75	95
D6	M4 x 0.7P	M5 x 0.8P	M8 x 1.25P	M12 x 1.75P	M16 x 2P	M20 x 2.5P
D7 h6	-	16	22	32	40	55
L1	42	62	76	105	142	180
L2	19.5	28.5	36.5	58	82	82
L3	6.5	20	19.5	30	30	30
L4	1	1.5	1.5	2	3	3
L5	14	25	32	40	63	70
L6	2	2	3	5	5	6
L7	4	6	7	10	12	15
L8	31	62	84	103.5	132	180.5
L9	42	70	90	115	142	180
L10	10	12.5	19	28	36	42
L11	-	26	26	26	40	41.5
L12	-	15	15	15	20	21.5
L13	-	21	22.5	23	33.5	33.5
C1[1]	46	70	100	130	165	215
C2[1]	M4 x 0.7P	M5 x 0.8P	M6 x 1P	M8 x 1.25P	M10 x 1.5P	M12 x 1.75P
C3[1]	≤11 / ≤12[2]	≤14 / ≤16[2]	≤19 / ≤24	≤32	≤38	≤48
C4[1]	25	34	40	50	60	85
C5[1]	30	50	80	110	130	180
C6[1]	3.5	8	4	5	6	6
C7[1]	42	60	90	115	142	190
C8[1]	29.5	19	17	19.5	22.5	29
C9[1]	86.5	129.5	157	211	266.5	321.5
C10[1]	8.75	13.5	10.75	13	15	20.75
B1 h9	4	5	6	10	12	16
H1	13.5	18	24.5	35	43	59
X DIN5480	-	W16x0.8x 30x18x6m	W22x1.25x 30x16x6m	W32x1.25x 30x24x6m	W40x2x 30x18x6m	W55x2x 30x26x6m

1. C1~C10 are motor specific dimensions (metric std shown). Refer to www.apexdyna.com and Design Tool to view your specific motor mounting system.
2. AFX042 ratio 5, 10 offers C3 ≤ 12 option. AFX060 ratio 5, 10 offers C3 ≤ 16 option

Dimensions (2-stage, Ratio i=12~100) / AFX Series

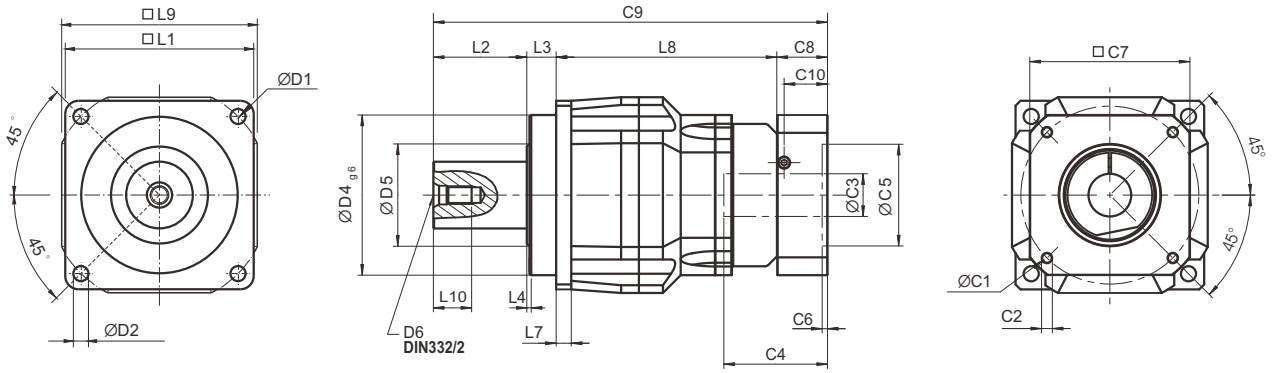

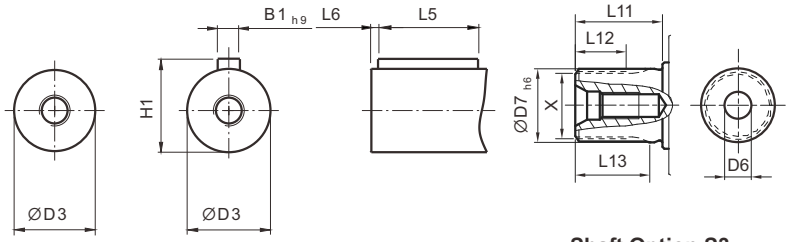

Shaft Option S1 **Shaft Option S2** **Shaft Option S3**

AFX060A / AFX075A / AFX100A / AFX140A

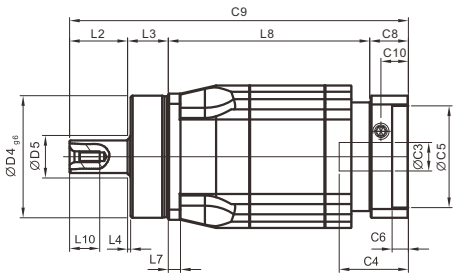

[unit: mm]

Dimension	AFX042	AFX060	AFX060A	AFX075	AFX075A	AFX100	AFX100A	AFX140	AFX140A	AFX180
D1	50	68		85		120		165		215
D2	3.4	5.5		6.8		9		11		13
D3	12 $_{j6}$	16 $_{h6}$		22 $_{h6}$		32 $_{h6}$		40 $_{h6}$		55 $_{h6}$
D4 g6	35	60		70		90		130		160
D5	22	21		30		40		75		95
D6	M4x0.7P	M5x0.8P		M8x1.25P		M12x1.75P		M16x2P		M20x2.5P
D7 h6	-	16		22		32		40		55
L1	42	62		76		105		142		180
L2	19.5	28.5		36.5		58		82		82
L3	6.5	20		19.5		30		30		30
L4	1	1.5		1.5		2		3		3
L5	14	25		32		40		63		70
L6	2	2		3		5		5		6
L7	4	6		7		10		12		15
L8	58.5	73	99	117	132	145	164.5	188.5	203.5	236
L9	42	70		90		115		142		180
L10	10	12.5		19		28		36		42
L11	-	26		26		26		40		41.5
L12	-	15		15		15		20		21.5
L13	-	21		22.5		23		33.5		33.5
C1[3]	46	46	70	70	100	100	130	130	165	165
C2[3]	M4x0.7P	M4x0.7P	M5x0.8P	M5x0.8P	M6x1P	M6x1P	M8x1.25P	M8x1.25P	M10x1.5P	M10x1.5P
C3[3]	≤11/≤12	≤11/≤12	≤14/≤16	≤14/≤15.875/≤16	≤19/≤24	≤19/≤24	≤32	≤32	≤38	≤38
C4[3]	25	25	34	34	40	40	50	50	60	60
C5[3]	30	30	50	50	80	80	110	110	130	130
C6[3]	3.5	3.5	8	8	4	4	5	5	6	6
C7[3]	42	42	60	60	90	90	115	115	142	142
C8[3]	29.5	29.5	19	19	17	17	19.5	19.5	22.5	22.5
C9[3]	114	151	166.5	192	205	250	272	320	338	370.5
C10[3]	8.75	8.75	13.5	13.5	10.75	10.75	13	13	15	15
B1 h9	4	5		6		10		12		16
H1	13.5	18		24.5		35		43		59
X DIN5480	-	W16x0.8x 30x18x6m		W22x1.25x 30x16x6m		W32x1.25x 30x24x6m		W40x2x 30x18x6m		W55x2x 30x26x6m

3. C1~C10 are motor specific dimensions (metric std shown). Refer to www.apexdyna.com and Design Tool to view your specific motor mounting system.

Specifications / AFXR Series

Gearbox Performance

Model No.		Stages	Ratio[A]	AFXR042[F]	AFXR060	AFXR060A	AFXR075	AFXR075A	AFXR100	AFXR100A	AFXR140	AFXR140A	AFXR180
Nominal Output Torque T_{2N}	Nm	1	3	9	36	–	90	–	195	–	342	–	588
			4	12	48	–	120	–	260	–	520	–	1,040
			5	15	60	–	150	–	325	–	650	–	1,200
			6	18	55	–	150	–	310	–	600	–	1,100
			7	19	50	–	140	–	300	–	550	–	1,100
			8	17	45	–	120	–	260	–	500	–	1,000
			9	14	40	–	100	–	230	–	450	–	900
			10	14	40	–	150	–	325	–	650	–	1,200
			12	–	–	–	150	–	310	–	600	–	1,100
			14	–	42	–	140	–	300	–	550	–	1,100
			16	–	–	–	120	–	260	–	500	–	1,000
			20	–	40	–	100	–	230	–	450	–	900
		2	12	12	–	–	–	–	–	–	–	–	–
			15	14	–	–	–	–	–	–	–	–	–
			16	15	–	–	–	–	–	–	–	–	–
			20	14	–	–	–	–	–	–	–	–	–
			25	15	60	60	150	150	325	325	650	650	1,200
			28	19	–	–	140	140	300	300	550	550	1,100
			30	20	55	55	150	150	310	310	600	600	1,100
			32	17	–	–	120	120	260	260	500	500	1,000
			35	19	50	50	140	140	300	300	550	550	1,100
			40	17	45	45	120	120	260	260	500	500	1,100
			45	14	40	40	100	100	230	230	450	450	900
			48	–	–	–	150	150	310	310	600	600	1,100
			50	14	60	60	100	100	230	230	650	650	1,200
			60	20	55	55	150	150	310	310	600	600	1,100
			64	–	–	–	120	120	260	260	500	500	1,000
			70	19	50	50	140	140	300	300	550	550	1,100
			80	17	45	45	120	120	260	260	500	500	1,000
			90	14	40	40	100	100	230	230	450	450	900
			100	14	40	60	150	150	325	325	650	650	1,200
			120	–	–	55	150	150	310	310	600	600	1,100
			140	–	–	50	140	140	300	300	550	550	1,100
			160	–	–	45	120	120	260	260	550	550	1,000
			180	–	–	40	100	100	230	230	450	450	900
			200	–	–	40	100	100	230	230	450	450	900
Emergency Stop Torque T_{2NOT}[B]	Nm	1,2	3~200	3 times of Nominal Output Torque									
Nominal Input Speed n_{1N}	rpm	1,2	3~200	5,000	5,000	5,000	4,000	4,000	4,000	4,000	3,000	3,000	3,000
Max. Input Speed n_{1B}	rpm	1,2	3~200	10,000	10,000	10,000	8,000	8,000	8,000	8,000	6,000	6,000	6,000
Micro Backlash P0	arcmin	1	3~20	–	–	–	≤2	–	≤2	–	≤2	–	≤2
		2	12~200	–	–	–	≤4	≤4	≤4	≤4	≤4	≤4	≤4
Reduced Backlash P1	arcmin	1	3~20	≤4	≤4	–	≤4	–	≤4	–	≤4	–	≤4
		2	12~200	≤7	≤7	≤7	≤7	≤7	≤7	≤7	≤7	≤7	≤7
Standard Backlash P2	arcmin	1	3~20	≤6	≤6	–	≤6	–	≤6	–	≤6	–	≤6
		2	12~200	≤9	≤9	≤9	≤9	≤9	≤9	≤9	≤9	≤9	≤9
Torsional Rigidity	Nm/arcmin	1,2	3~200	3	7	7	14	14	25	25	50	50	145
Max. Radial Load F_{2rB}[C]	N	1,2	3~200	610	2,900	2,900	4,500	4,500	7,800	7,800	9,450	9,450	15,600
Max. Axial Load F_{2aB}[C]	N	1,2	3~200	320	1,450	1,450	2,250	2,250	3,900	3,900	4,725	4,725	7,800
Service Life[D]	hr	1,2	3~200	30,000									
Efficiency η	%	1	3~20	≥95%									
		2	12~200	≥92%									
Weight	kg	1	3~20	0.9	2.7	–	6.1	–	12.2	–	25.3	–	50.2
		2	12~200	1.2	2.4	3.7	4.8	7.9	11.6	16	24	32	47.4
Operating Temperature	°C	1,2	3~200	-10°C~+90°C									
Lubrication		1,2	3~200	Synthetic lubrication oils									
Degree of Gearbox Protection		1,2	3~200	IP65									
Mounting Position		1,2	3~200	all directions									
Noise (n_1=3000rpm, i=10, No load)[E]	dB	1,2	3~200	≤61	≤63	≤65	≤65	≤68	≤68	≤70	≤70	≤72	≤72

A. Ratio ($i=N_{in} / N_{out}$)
B. Max. acceleration torque T_{2B} = 60% of T_{2NOT}
C. Applied to the output shaft center at 100 rpm
D. For continuous operation, the service life time is reduced
E. These values are measured by gearbox with ratio = 10 (1-stage) or ratio = 100 (2-stage) at 3,000 rpm no loading.
by lower ratio and / or higher RPM, the noise level could be 3 to 5 dB Higher.
F. Continuous operation is not supported.

Gearbox Inertia

Model No.		Stages	Ratio[A]	AFXR042	AFXR060	AFXR060A	AFXR075	AFXR075A	AFXR100	AFXR100A	AFXR140	AFXR140A	AFXR180
Mass Moments of Inertia J_1	kg • cm^2	1	3~10	0.09	0.35	–	2.25	–	6.84	–	23.4	–	68.9
			12~20	–	0.07	–	1.87	–	6.25	–	21.8	–	65.6
		2	12~20	0.09	–	–	–	–	–	–	–	–	–
			25~90	0.09	0.09	0.35	0.35	2.25	2.25	6.84	6.84	23.4	23.4
			48, 64	–	–	0.07	0.31	1.87	1.87	6.25	6.25	21.8	21.8
			100	0.09	0.09	0.07	0.31	1.87	1.87	6.25	6.25	21.8	21.8
			120~200	–	–	0.07	0.31	1.87	1.87	6.25	6.25	21.8	21.8

Dimensions (1-stage, Ratio i=3~20) / AFXR Series

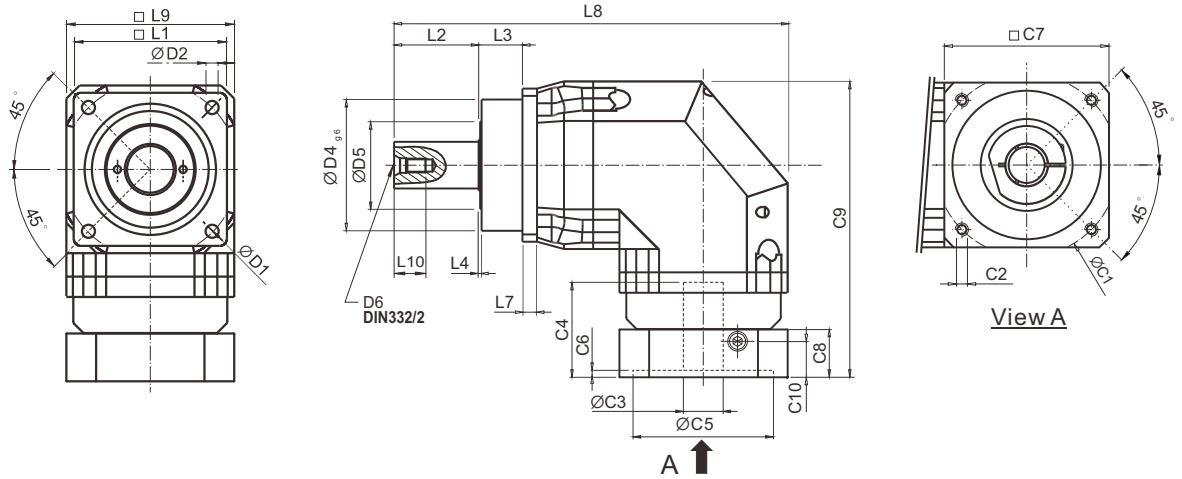

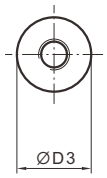

Shaft Option S1

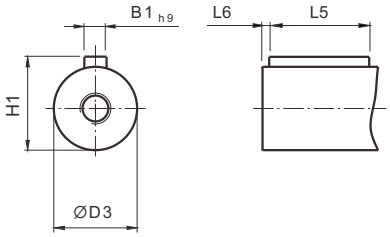

Shaft Option S2

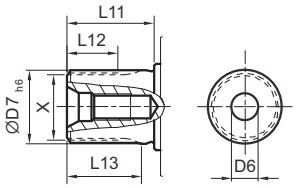

Shaft Option S3

[unit: mm]

Dimension	AFXR042	AFXR060	AFXR075	AFXR100	AFXR140	AFXR180
D1	50	68	85	120	165	215
D2	3.4	5.5	6.8	9	11	13
D3	12 $_{j6}$	16 $_{h6}$	22 $_{h6}$	32 $_{h6}$	40 $_{h6}$	55 $_{h6}$
D4 g6	35	60	70	90	130	160
D5	22	21	30	40	75	95
D6	M4 x 0.7P	M5 x 0.8P	M8 x 1.25P	M12 x 1.75P	M16 x 2P	M20 x 2.5P
D7 h6	-	16	22	32	40	55
L1	42	62	76	105	142	180
L2	19.5	28.5	36.5	58	82	82
L3	6.5	20	19.5	30	30	30
L4	1	1.5	1.5	2	3	3
L5	14	25	32	40	63	70
L6	2	2	3	5	5	6
L7	4	6	7	10	12	15
L8	111.5	171.5	216.5	283.5	360.5	427.5
L9	42	70	90	115	142	180
L10	10	12.5	19	28	36	42
L11	-	26	26	26	40	41.5
L12	-	15	15	15	20	21.5
L13	-	21	22.5	23	33.5	33.5
C1[1]	46	70	100	130	165	215
C2[1]	M4 x 0.7P	M5 x 0.8P	M6 x 1P	M8 x 1.25P	M10 x 1.5P	M12 x 1.75P
C3[1]	≤11 / ≤12	≤14 / ≤16	≤19 / ≤24	≤32	≤38	≤48
C4[1]	25	34	40	50	60	85
C5[1]	30	50	80	110	130	180
C6[1]	3.5	8	4	5	6	6
C7[1]	42	60	90	115	142	190
C8[1]	29.5	19	17	19.5	22.5	29
C9[1]	90.5	116.5	152.5	191.5	235.5	303.5
C10[1]	8.75	13.5	10.75	13	15	20.75
B1 h9	4	5	6	10	12	16
H1	13.5	18	24.5	35	43	59
X DIN5480	-	W16x0.8x 30x18x6m	W22x1.25x 30x16x6m	W32x1.25x 30x24x6m	W40x2x 30x18x6m	W55x2x 30x26x6m

1. C1~C10 are motor specific dimensions (metric std shown). Refer to www.apexdyna.com and Design Tool to view your specific motor mounting system.

Dimensions (2-stage, Ratio i=12~200) / AFXR Series

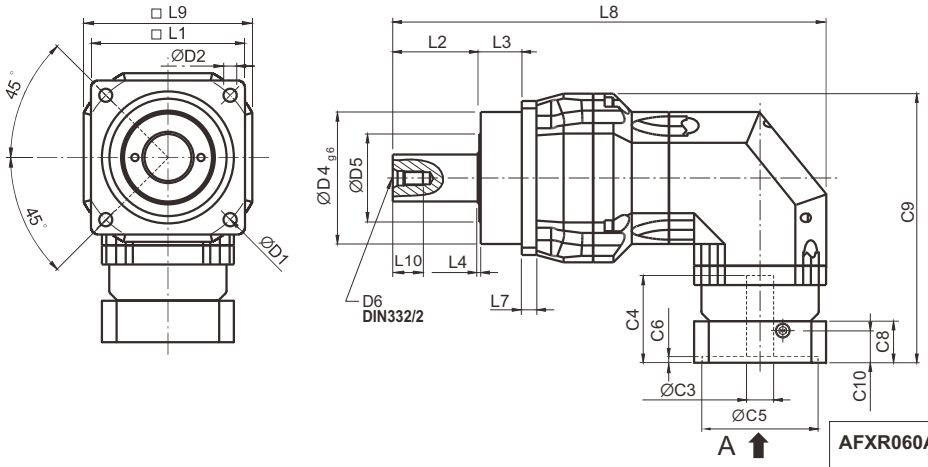

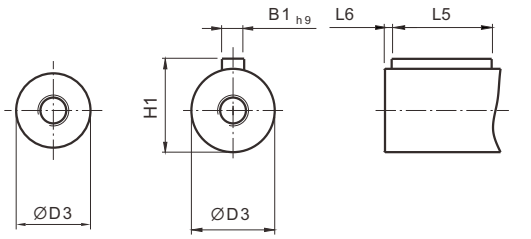

Shaft Option S1 Shaft Option S2

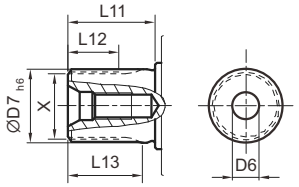

Shaft Option S3

AFXR060A / AFXR075A / AFXR100A / AFXR140A

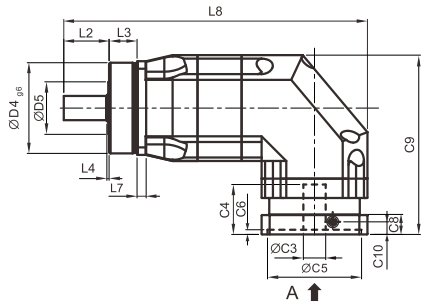

[unit: mm]

Dimension	AFXR042	AFXR060	AFXR060A	AFXR075	AFXR075A	AFXR100	AFXR100A	AFXR140	AFXR140A	AFXR180
D1	50	68		85		120		165		215
D2	3.4	5.5		6.8		9		11		13
D3	12 j6	16 h6		22 h6		32 h6		40 h6		55 h6
D4 g6	35	60		70		90		130		160
D5	22	21		30		40		75		95
D6	M4x0.7P	M5x0.8P		M8x1.25P		M12x1.75P		M16x2P		M20x2.5P
D7 h6	-	16		22		32		40		55
L1	42	62		76		105		142		180
L2	19.5	28.5		36.5		58		82		82
L3	6.5	20		19.5		30		30		30
L4	1	1.5		1.5		2		3		3
L5	14	25		32		40		63		70
L6	2	2		3		5		5		6
L7	4	6		7		10		12		15
L8	139	176	208.5	220	264.5	309.5	344.5	392.5	432	464.5
L9	42	70		90		115		142		180
L10	10	12.5		19		28		36		42
L11	-	26		26		26		40		41.5
L12	-	15		15		15		20		21.5
L13	-	21		22.5		23		33.5		33.5
C1[2]	46	46	70	70	100	100	130	130	165	165
C2[2]	M4x0.7P	M4x0.7P	M5 x 0.8P	M5x0.8P	M6 x 1P	M6x1P	M8x1.25P	M8x1.25P	M10x1.5P	M10x1.5P
C3[2]	≤11 / ≤12	≤11 / ≤12	≤14 / ≤16	≤14 / ≤15.875 / ≤16	≤19 / ≤24	≤19 / ≤24	≤32	≤32	≤38	≤38
C4[2]	25	25	34	34	40	40	50	50	60	60
C5[2]	30	30	50	50	80	80	110	110	130	130
C6[2]	3.5	3.5	8	8	4	4	5	5	6	6
C7[2]	42	42	60	60	90	90	115	115	142	142
C8[2]	29.5	29.5	19	19	17	17	19.5	19.5	22.5	22.5
C9[2]	90.5	104.5	116.5	126.5	152.5	165	191.5	205	235.5	254.5
C10[2]	8.75	8.75	13.5	13.5	10.75	10.75	13	13	15	15
B1 h9	4	5		6		10		12		16
H1	13.5	18		24.5		35		43		59
X DIN5480	-	W16x0.8x 30x18x6m		W22x1.25x 30x16x6m		W32x1.25x 30x24x6m		W40x2x 30x18x6m		W55x2x 30x26x6m

2. C1~C10 are motor specific dimensions (metric std shown). Refer to www.apexdyna.com and Design Tool to view your specific motor mounting system.

Selection of the Optimum Gearbox

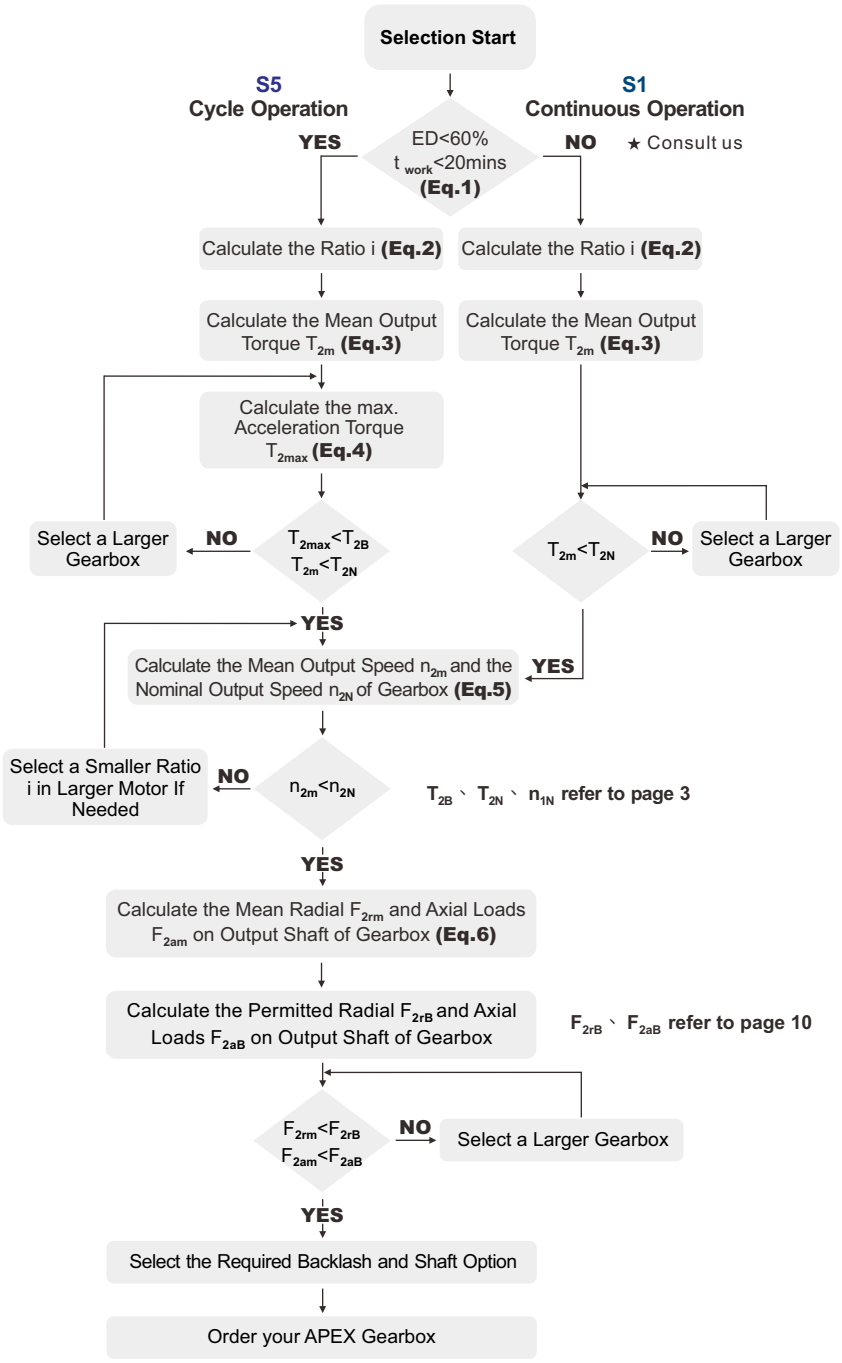

Recommended (for S5 Cycle Operation)

The general design is given for

$\frac{J_L}{i^2} \leq 4 \times J_m$

The optimal design is given for

$\frac{J_L}{i^2} \cong J_m$

J_L Load Inertia

J_m Motor Inertia

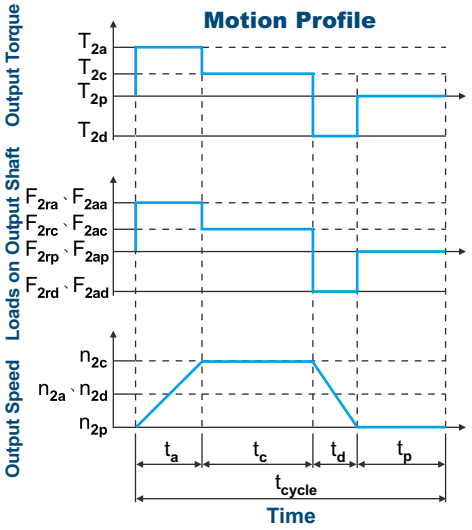

1. $ED = \frac{t_a + t_c + t_d}{t_{cycle}} \times 100\%$, $t_{work} = t_a + t_c + t_d$

Index : a. Acceleration, c. Constant, d. Deceleration, p. Pause **(Eq.1)**

2. $i \cong \frac{n_m}{n_{work}}$

n_m Output Speed of the Motor

n_{work} Working Speed **(Eq.2)**

3. $T_{2m} = \sqrt[3]{\frac{n_{2a} \times t_a \times T_{2a}^{\ 3} + n_{2c} \times t_c \times T_{2c}^{\ 3} + n_{2d} \times t_d \times T_{2d}^{\ 3}}{n_{2a} \times t_a + n_{2c} \times t_c + n_{2d} \times t_d}}$ **(Eq.3)**

4. $T_{2max} = T_{mB} \times i \times k_s \times \eta$

where K_s is

K_s	No. of Cycles / hr
1.0	0~1,000
1.1	1,000 ~ 1,500
1.3	1,500 ~ 2,000
1.6	2,000 ~ 3,000
1.8	3,000 ~ 5,000
2.0	5,000 ~ 9,000
2.05	9,000 ~ 10,000
not recommended	above 10,000

T_{mB} Max. Output Torque of the Motor

η Efficiency of the Gearbox **(Eq.4)**

5. $n_{2a} = n_{2d} = \frac{1}{2} \times n_{2c}$

$n_{2m} = \frac{n_{2a} \times t_a + n_{2c} \times t_c + n_{2d} \times t_d}{t_a + t_c + t_d}$

$n_{2N} = \frac{n_{1N}}{i}$ **(Eq.5)**

6. $F_{2rm} = \sqrt[3]{\frac{n_{2a} \times t_a \times F_{2ra}^{\ 3} + n_{2c} \times t_c \times F_{2rc}^{\ 3} + n_{2d} \times t_d \times F_{2rd}^{\ 3}}{n_{2a} \times t_a + n_{2c} \times t_c + n_{2d} \times t_d}}$

$F_{2am} = \sqrt[3]{\frac{n_{2a} \times t_a \times F_{2aa}^{\ 3} + n_{2c} \times t_c \times F_{2ac}^{\ 3} + n_{2d} \times t_d \times F_{2ad}^{\ 3}}{n_{2a} \times t_a + n_{2c} \times t_c + n_{2d} \times t_d}}$ **(Eq.6)**

Permitted Radial and Axial Loads

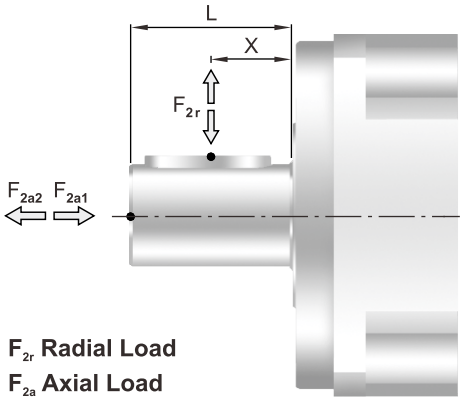

F_{2r} Radial Load
F_{2a} Axial Load

The permitted radial and axial loads on output shaft of the gearbox depend on the design of the gearbox supporting bearings.
APEX use the extension straddle oversized ball bearing design.
It can take heavy load from both axes.

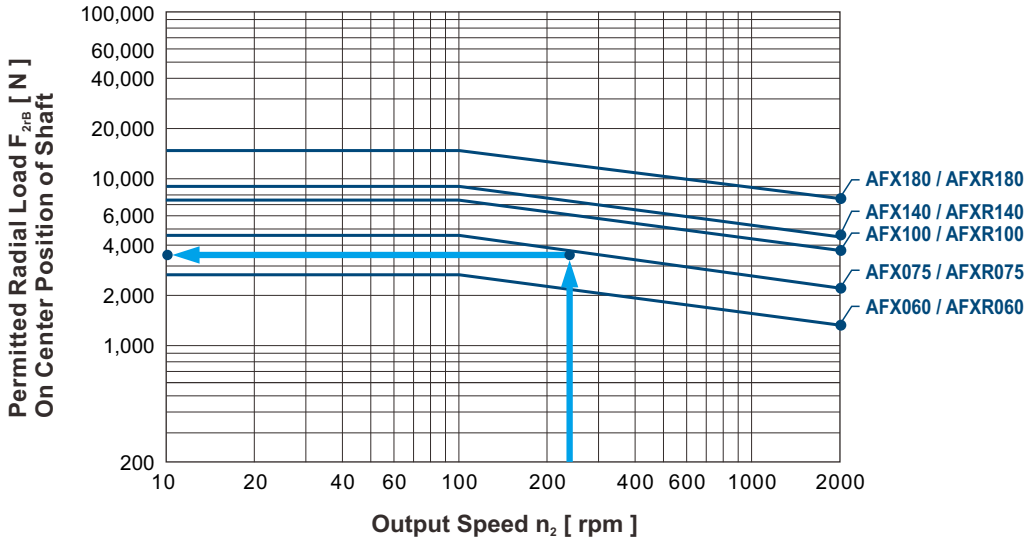

If radial force F_{2r} is exerted on the center of the output shaft X=1/2 x L.
Under various operating condition the lifetime is over 30,000* hours.
The permitted radial load is given on left diagram.

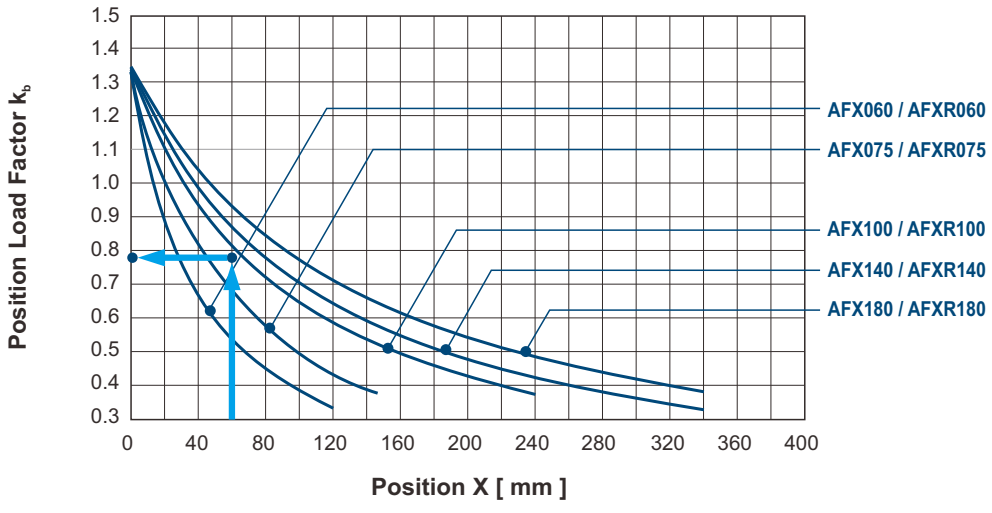

If radial force F_{2r} is not exerted on the center of the output shaft X<1/2 x L or X>1/2 x L
The permitted radial and axial loads can be calculated by the position load factor K_b on the left diagram.

★ S1 service life 15,000 hrs