APEX DYNAMICS, INC.

MOTOR MOUNTING INSTRUCTIONS

1

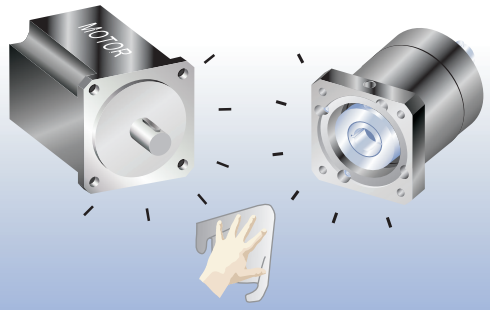

Double-check the motor and gearbox size.
Clean the mounting surface.

2

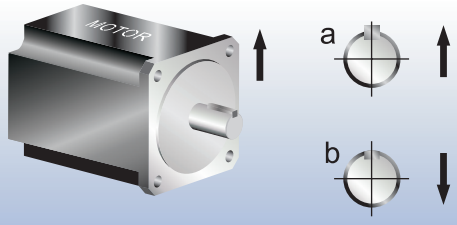

a. Remove the motor key.
b. Insert balance key.

3

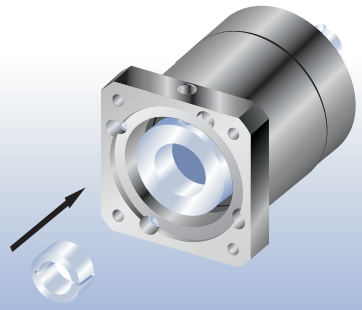

Check motor shaft size and insert bushing.

Correct installation.

When installing the bushing, be sure to align the collet gap perpendicular to set screw.

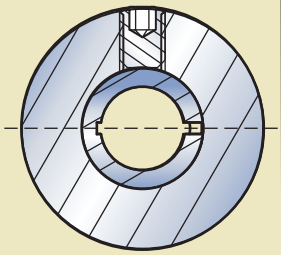

4

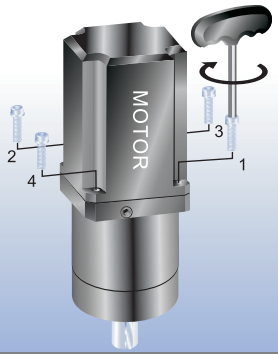

Set at vertical position. Tighten the mounting bolts (including washer) in 1~4 order with wrench to 5% specified torque. (See Table 1).

5



Tighten the set screw with torque wrench to specified torque (See Table 2)

6

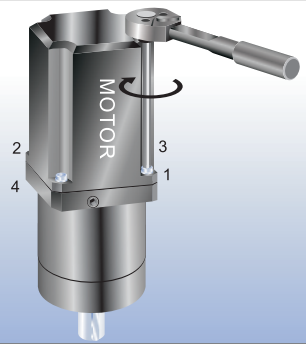

Tighten the mounting bolts in 1~4 order with torque wrench to specified torque. (See Table 1).

7

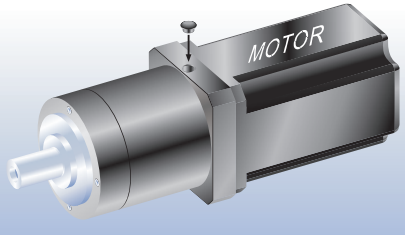

Insert the plug.

Table1 Tightening Torque Recommended for Motor Mounting Bolt

Bolt Size	Width Across Flats	Strength 8.8 Tightening Torque		Strength 10.9 Tightening Torque		Strength 12.9 Tightening Torque	
	[mm]	[Nm]	[In-lbs]	[Nm]	[In-lbs]	[Nm]	[In-lbs]
M3 x 0.5P	2.5	1.3	12	1.8	16	2.1	19
M4 x 0.7P	3	3	27	4.1	37	4.9	44
M5 x 0.8P	4	6.1	55	8.2	73	9.8	87
M6 x 1P	5	11	98	14	124	17	151
M8 x 1.25P	6	25	222	34	302	41	364
M10 x 1.5P	8	49	434	67	594	80	709
M12 x 1.75P	10	85	753	116	1028	139	1232
M14 x 2P	12	137	1214	186	1648	223	1976
M16 x 2P	14	210	1860	286	2534	343	3038

Table2 Tightening Torque Recommended for Set collar Bolt

Gearbox Size		Motor Shaft Dia.	Bolt Size	Width Across Flats	Tightening Torque	
		[mm]	[mm]	[mm]	[Nm]	[In-lbs]
PE050 PG040 PN023 PB060	1 stage	≤12	M6 x 1P x 8L	3	5.6	50
	2 stage	≤12	M6 x 1P x 8L	3	5.6	50
PE070 PG060 PN034 PB090	1 stage	≤16	M8 x 1.25P x 10L	4	9.5	85
	2 stage	≤16	M8 x 1.25P x 10L	4	9.5	85
PE090 PG080 / PG080A PN042 PB115	1 stage	≤24	M10 x 1.5P x 12L	5	23	205
	2 stage	≤24	M10 x 1.5P x 12L	5	23	205
PE120 PG120 / PG120A PN056 PB142	1 stage	≤32	M12 x 1.75P x 16L	6	45	400
	2 stage	≤32	M12 x 1.75P x 16L	6	45	400
PE155 PG160 PN075	1 stage	≤38	M16 x 2P x 20L	8	78	693
	2 stage	≤38	M16 x 2P x 20L	8	78	693

Note: Holding torques must be bigger than values shown above. Bolts can be tightened up to 20% higher for increased holding torques.

APEX DYNAMICS, INC.
Tel : 886-4-23550219 / Fax : 886-4-23550218
E-Mail : sales@apexdyna.com / Web : www.apexdyna.com
No. 6, 20th Rd., Taichung Industrial Park, Taichung, Taiwan. R.O.C.