MOTOR MOUNTING INSTRUCTIONS

1

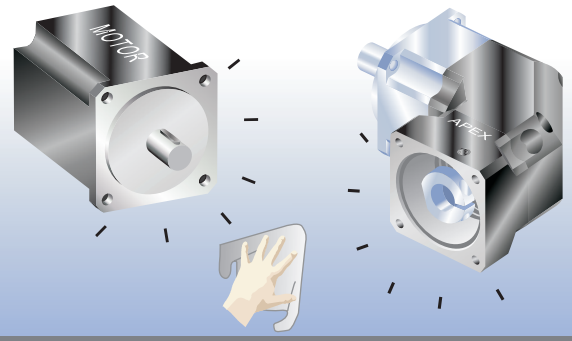

Double-check the motor and gearbox size.
Clean the mounting surface.

2

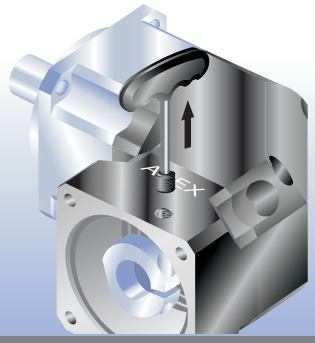

Remove the plug on the adapter plate.
Rotate the set collar till the bolt is line up.

3

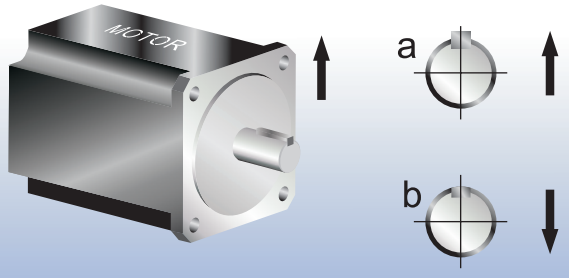

a. Remove motor key.
b. Insert balance key.

4

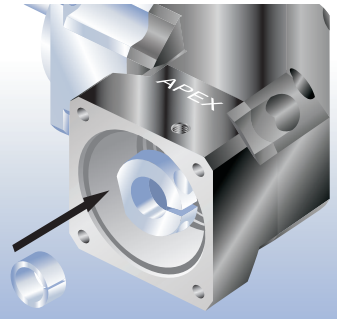

Check motor shaft size and insert bushing if necessary.

Correct installation.

When installing on **flatted shafts**, be sure to align the collet gap over the flat and the set collar bolt perpendicular to the flat.

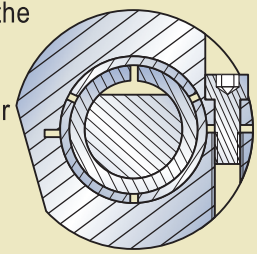

5

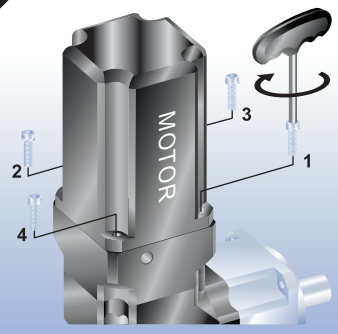

Set at vertical position. Tighten the mounting bolts (including washer) in 1~4 order with wrench to 5% specified torque. (See Table 1)

6

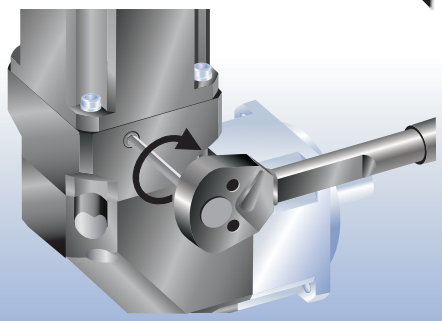

Tighten the set collar bolt with torque wrench to specified torque. (See Table 2)

7

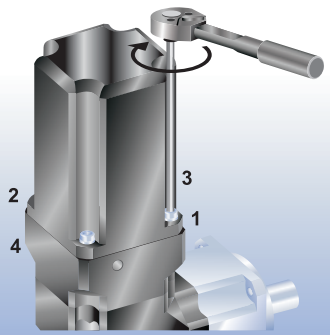

Tighten the mounting bolts in 1~4 order with torque wrench to specified torque. (See Table 1)

8

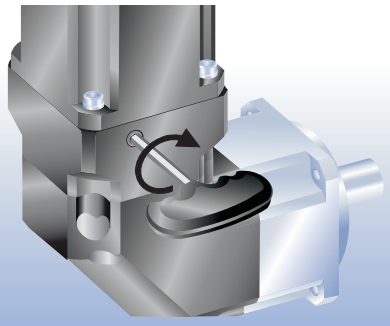

Tighten back the screw plug.

Table 1 Tightening Torque Recommended for Motor Mounting Bolt

Bolt Size	Width Across Flats	Strength 8.8 Tightening Torque		Strength 10.9 Tightening Torque		Strength 12.9 Tightening Torque	
	[mm]	[Nm]	[In-lbs]	[Nm]	[In-lbs]	[Nm]	[In-lbs]
M3 x 0.5P	2.5	1.3	12	1.8	16	2.1	19
M4 x 0.7P	3	3	27	4.1	37	4.9	44
M5 x 0.8P	4	6.1	55	8.2	73	9.8	87
M6 x 1P	5	11	98	14	124	17	151
M8 x 1.25P	6	25	222	34	302	41	364
M10 x 1.5P	8	49	434	67	594	80	709
M12 x 1.75P	10	85	753	116	1028	139	1232
M14 x 2P	12	137	1214	186	1648	223	1976
M16 x 2P	14	210	1860	286	2534	343	3038

Table 2 Tightening Torque Recommended for Set Collar Bolt

Gearbox Size		Motor Shaft Dia.	Bolt Size	Width Across Flats	Tightening Torque	
		[mm]	[mm]	[mm]	[Nm]	[In-lbs]
ABR042 AFR042 AER050	1 stage	≤11	M3 x 0.5P x 8L	2.5	2.1	19
	2 stage	≤11	M3 x 0.5P x 8L	2.5	2.1	19
ABR060 AFR060 AER070	1 stage	≤14	M4 x 0.7P x 12L	3	4.9	44
	2 stage	≤11	M3 x 0.5P x 8L	2.5	2.1	19
ABR090 AFR075 AER090	1 stage	≤19	M5 x 0.8P x 14L	4	9.8	87
	2 stage	≤14	M4 x 0.7P x 12L	3	4.9	44
ABR115 AFR100 AER120	1 stage	≤32	M6 x 1P x 16L	5	17	151
	2 stage	≤19	M5 x 0.8P x 14L	4	9.8	87
ABR142 AFR140 AER155	1 stage	≤38	M8 x 1.25P x 20L	6	41	364
	2 stage	≤32	M6 x 1P x 16L	5	17	151
ABR180 AFR180 AER205	1 stage	≤48	M10 x 1.5P x 25L	8	80	709
	2 stage	≤38	M8 x 1.25P x 20L	6	41	364
ABR220 AFR220 AER235	1 stage	≤55	M12 x 1.75P x 30L	10	139	1232
	2 stage	≤48	M10 x 1.5P x 25L	8	80	709

Note: Holding torques must be bigger than values shown above. Bolts can be tightened up to 20% higher for increased holding torques.

APEX DYNAMICS, INC.
Tel : 886-4-23550219 / Fax : 886-4-23550218
E-Mail : sales@apexdyna.com / Web : www.apexdyna.com
No. 6, 20th Rd., Taichung Industrial Park, Taichung, Taiwan. R.O.C.