AT-4M Series

Dimensions (1-stage, Ratio i=1)

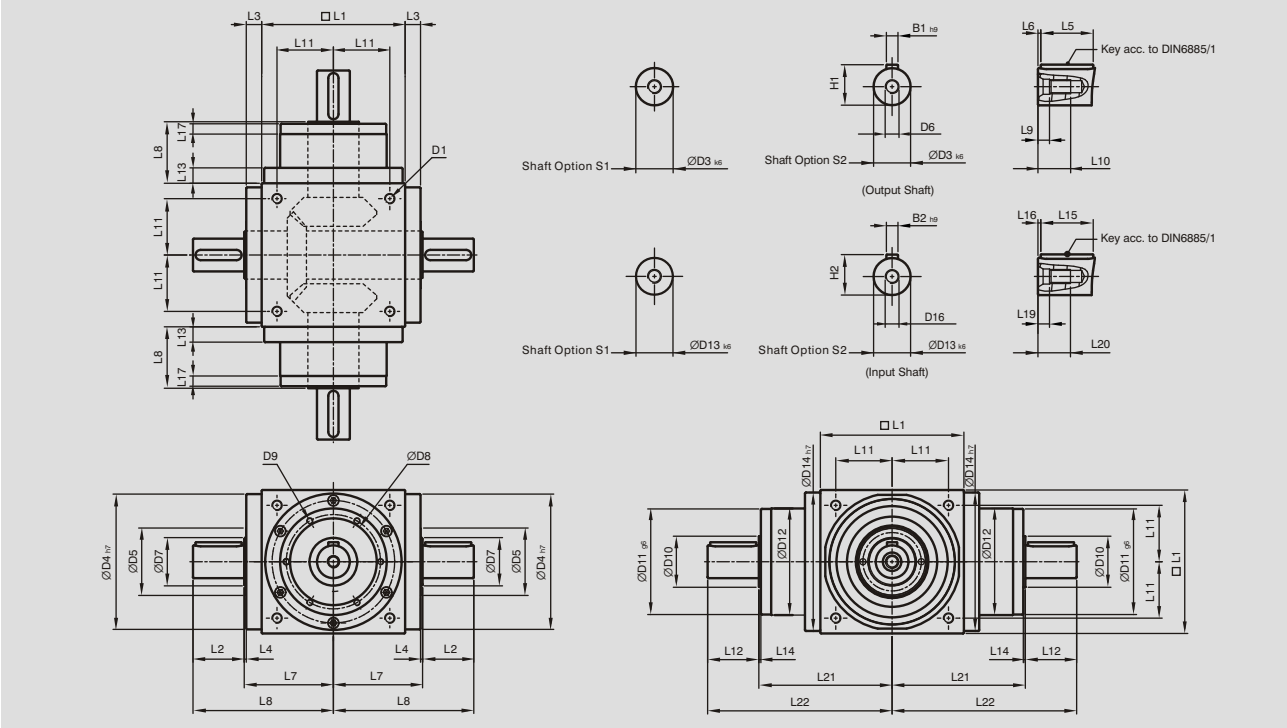

[unit: mm]

Dimension	AT065 4M	AT075 4M	AT090 4M	AT110 4M	AT140 4M	AT170 4M	AT210 4M	AT240 4M	AT280 4M
D1	M4	M6	M6	M8	M10	M12	M16	M16	M16
D3 k6	13	16	18	22	32	40	50	55	60
D4 h7	63	73	88	108	135	165	205	235	275
D5	31	35	43	53	68	83	104	124	144
D6	M4	M5	M5	M8	M12	M16	M16	M16	M20
D7	21	22	28	33	47	55	75	85	110
D8	53	62	76	95	92	114	142	160	176
D9	4xM4xL7	4xM5xL8	4xM5xL8	6xM6xL10	6xM6xL10	6xM8xL12.5	6xM8xL12.5	6xM8xL12.5	6xM10xL15
D10	15.4	20.4	25.8	35.8	49.8	59.3	79.3	92.3	102.3
D11 g6	62.9	72.9	87	107	103	127	158	178	198
D12	62	72	86	106	104	128	160	180	200
D13 k6	13	16	18	22	32	40	50	55	60
D14 h7	63	73	88	108	135	165	205	235	275
D16	M4	M5	M5	M8	M12	M16	M16	M16	M20
L1	65	75	90	110	140	170	210	240	280
L2	19.5	30	35	40	50	60	75	85	110
L3	13	14.5	15	15	15	15	20	25	25
L4	2	2	2	2	2	2	2	2	2
L5	16	25	28	32	45	50	70	80	100
L6	2	2.5	3.5	4	2.5	5	2.5	2.5	5
L7	47.5	54	62	72	87	102	127	147	167
L8	67	84	97	112	137	162	202	232	277
L9	4.5	4.8	4.8	7.2	10	12	12	12	15
L10	10	12.5	12.5	19	28	36	36	36	42
L11	27	30	36	44	55	67	85	95	110
L12	19.5	30	35	40	50	60	75	85	110
L13	13	15	15	15	15	15	20	25	25
L14	2	2	2	2	2	2	2	2	2
L15	16	25	28	32	45	50	70	80	100
L16	2	2.5	3.5	4	2.5	5	2.5	2.5	5
L17	6	8	8	8	10	10	10	10	10
L18	43	52.5	55	60	60	70	90	105	120
L19	4.5	4.8	4.8	7.2	10	12	12	12	15
L20	10	12.5	12.5	19	28	36	36	36	42
L21	75.5	90	100	115	130	155	195	225	260
L22	95	120	135	155	180	215	270	310	370
B1 h9	5	5	6	6	10	12	14	16	18
B2 h9	5	5	6	6	10	12	14	16	18
H1	15	18	20.5	24.5	35	43	53.5	59	64
H2	15	18	20.5	24.5	35	43	53.5	59	64