SVTS G Series

Water-resistant
Explosion-proof

Contents

	Model	Out ⌀	Page
WATER RESISTANT	SVTS G 01	130mm	112 - 113
EXPLOSION PROOF	SVTS G 02	130mm	116 - 117

CHEMICAL RESISTANT

SVTS G Series

Water-resistant Slip Rings



MARINE ENVIRONMENTS | IP 67 | POWER, SIGNALS & FIELDBUS

The water-resistant G Series Slip Rings are specially designed for extreme environments thanks to IP67 protection, anti corrosion coating for saline environments, anti-condensation valve and resistance for heating.

Several standard configurations with ample opportunity for customisation: from special cables, designed individually on customer needs, to the use of high data rate field buses.

Benefits

- Water resistant - IP67 (standard)
- Suitable for harsh environment
- Transmission of electric power/signals and fieldbuses in one unit
- Suitable for outdoor applications
- High reliability
- Long-life

Product code (detailed coding system on page 9)

1	2	3	4	5	6	7	8	9	10
SVTS	G	01	- C -	D	- EE /	FF	- GGGG /	HHHH	- II - XXX

1	Family	3	Protection[1]	5	Power circuits	7	Cable length - brushes side	9	Temperature range[2]
2	Series	4	Flange types	6	Signal circuits	8	Cable length - rings side	10	Special options

[1] IP67 [Z]
[2] Standard [ST]

Main applications

Construction & agricolture
Oil & Gas
Off-shore
Metallurgy
Water treatment

Features

N. of circuits	More than 50
Current	20A: 2,5 mm^2 (more upon request)
Voltage	680 VAC / VDC
Signal circuits	Analogic, digital, fieldbus - with special cables (data rate higher than 12 Mbps upon request)
Cables	Multicore with PUR outer insulation
Cables length	2500 mm standard (other length upon request)
Dielectric resistance	2000 VAC @ 50 Hz @ 60 sec
Insulation resistance	> 500 MΩ / 500 VDC
Nominal speed	100 rpm
Bearings	Double, steel, with permanent lubrication
Housing	Anodised aluminium Stainless steel as option
Temperature	From -40°C to +80°C
Protection	IP67
Additional features	Anti-condansation filter Heater resitance (optional)

SVTS G 01

Model	Number of circuits			Dimensions	
	Total	Power	Signals	*L*	*H*
		20A			
SVTS G 01-Z-A-04/00	4	4	-	80	188
SVTS G 01-Z-A-06/00	6	6	-	80	188
SVTS G 01-Z-A-12/00	12	12	-	80	188
SVTS G 01-Z-A-16/00	16	16	-	160	268
SVTS G 01-Z-A-18/00	18	18	-	160	268
SVTS G 01-Z-A-24/00	24	24	-	160	268
SVTS G 01-Z-A-30/00	30	30	-	240	348
SVTS G 01-Z-A-36/00	36	36	-	240	348
SVTS G 01-Z-A-42/00	42	42	-	240	348
SVTS G 01-Z-A-50/00	50	50	-	240	348

Transmission of		
Electric	Fieldbus	Fluidic (combined solutions)
Signals	EtherCAT	Air
Power	Profinet	Oil
	Sercos	Gas
	Powerlink	Water
	Ethernet	
	Canbus	

Customisations		
Cables	Mechanical design	Treatments
Conduit	Heat resistance	Anti-condensation
Encoder integration		

All dimensions in millimeters, unless otherwise specified

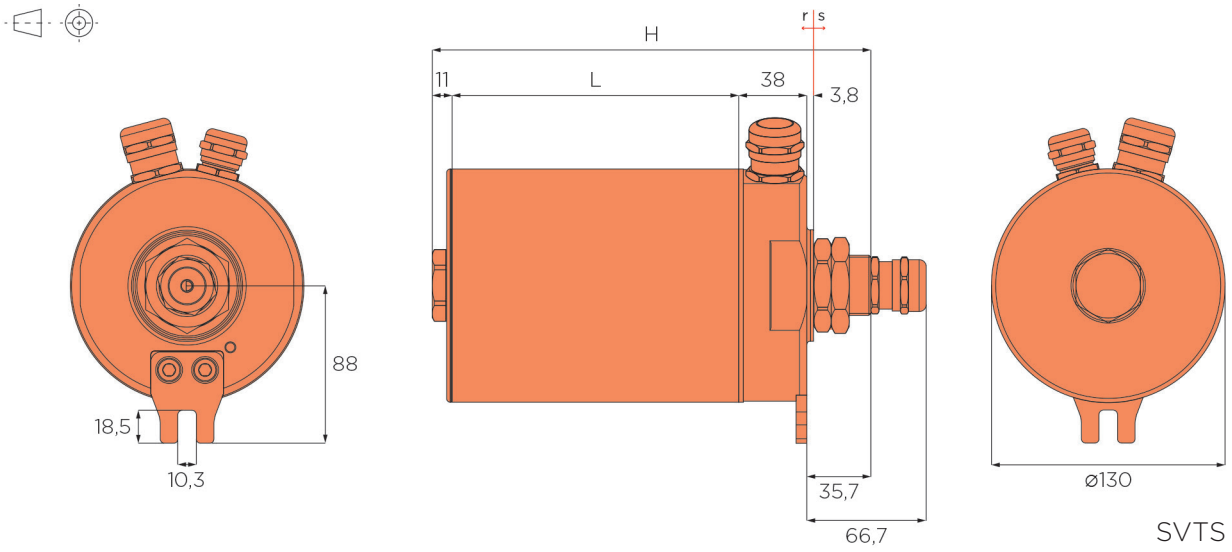

SVTS G 01

Custom cable length increase possible as multiples of 2000mm

All dimensions in millimeters, unless otherwise specified

SVTS G Series

Explosion-proof Slip Rings - ATEX

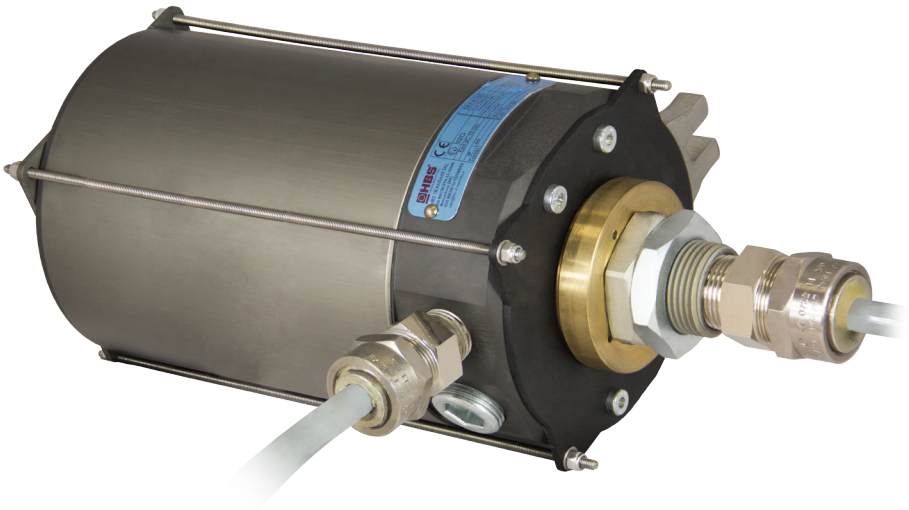

EXPLOSION PROOF | IP 66 | POWER, SIGNALS & FIELDBUS

The explosion-proof G Series Slip Rings are specially designed for ATEX environments.

Several standard configurations with ample opportunity for customisation: from special cables, designed individually on customer needs, to the use of high data rate field buses.

ATEX II2 GD Ex d IIB IIC T5 Gb certification for gas and dust makes them one of the most compact solutions on the market for explosive environments thanks to the native housing capability to control explosion preventing the propagation of flames thus avoiding the use of cumbersome boxes.

Benefits

- Explosion proof (ATEX)
- Water resitant - IP 66 (standard)
- Compact
- Transmission of electric power/signals and fieldbuses in one unit
- High reliability
- Long lifetime

Product code (detailed coding system on page 9)

1	2	3	4	5	6	7	8	9	10
SVTS	G	02	- C -	D	- EE	/ FF	- GGGG	/ HHHH	- II - XXX

1	Series	3	Protection[1]	5	Power circuits	7	Cable length - brushes side	9	Temperature range[2]
2	Model	4	Flange types	6	Signal circuits	8	Cable length - rings side	10	Special options

[1] IP66 [V]
[2] Explosion-proof [EX]

Main applications

Oil & Gas
Off-shore
Metallurgy
Water treatment
Medical systems

Features

N. of circuits	More than 50
Current	20A - 2,5 mm^2 (more upun request)
Voltage	680 VAC / VDC
Signal circuits	Analogic, digital, fieldbus - with special cables (data rate higher than 12 Mbps upon request)
Cables	Multicore with PUR outer insulation
Cables length	2500 mm standard (other length upon request)
Dielectric resistance	2000 VAC @ 50 Hz @ 60 sec
Insulation resistance	> 500 M / 500 VDC
Nominal speed	100 rpm
Bearings	Double, steel, with permanent lubrication
Housing	Anodised aluminium Stainless steel as option
Temperature	From -40°C to +60°C
Protection	IP66

SVTS G 02 Series

Model	Number of circuits		Dimensions	
	Total	Power	*L*	*H*
		20A		
SVTS G 02-V-A-04/00	4	4	80	188
SVTS G 02-V-A-06/00	6	6	80	188
SVTS G 02-V-A-12/00	12	12	80	188
SVTS G 02-V-A-16/00	16	16	160	268
SVTS G 02-V-A-18/00	18	18	160	268
SVTS G 02-V-A-24/00	24	24	160	268
SVTS G 02-V-A-30/00	30	30	140	348
SVTS G 02-V-A-36/00	36	36	240	348
SVTS G 02-V-A-42/00	42	42	240	348
SVTS G 02-V-A-50/00	50	50	240	348

Transmission of		
Electric	**Fieldbus**	**Fluidic (combined solutions)**
Signals	EtherCAT	Air
Power	Profinet	Oil
	Sercos	Gas
	Powerlink	Water
	Ethernet	
	Canbus	

Customisations		
Cables	Mechanical design	Treatments
Conduit	Heat resistance	Anti-condensation valve
Encoder integration		

All dimensions in millimeters, unless otherwise specified

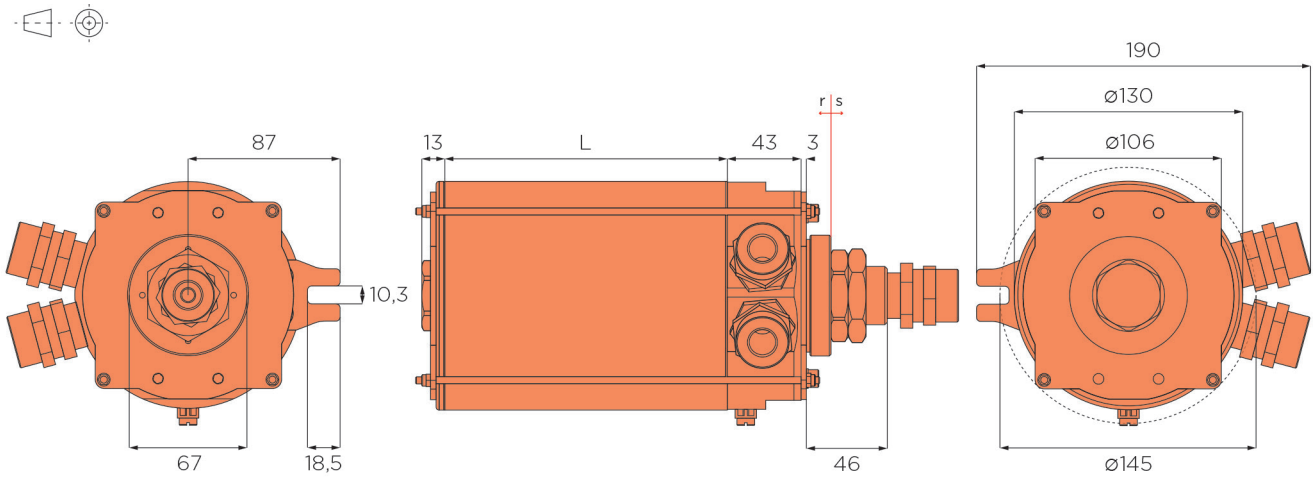

SVTS G 02

Custom cable length increase possible as multiples of 2000mm

All dimensions in millimeters, unless otherwise specified