8 Technical Data and Dimension Drawings for AC Motors

8.1 Variants

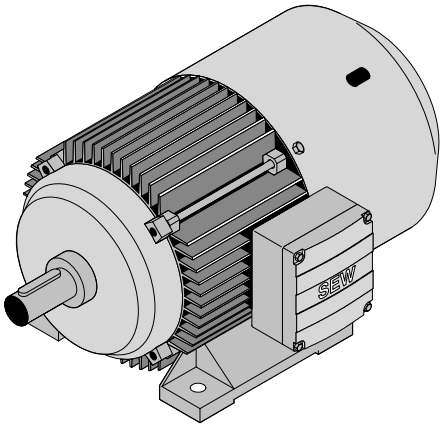

DT, DV../BM(G)

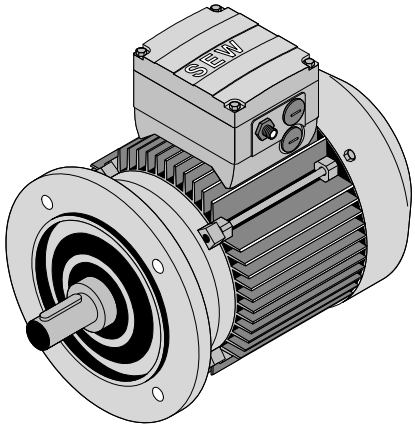

DFT, DFV../MSW

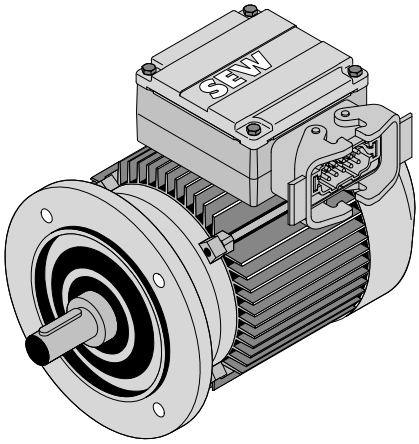

DFT, DFV../ASB1

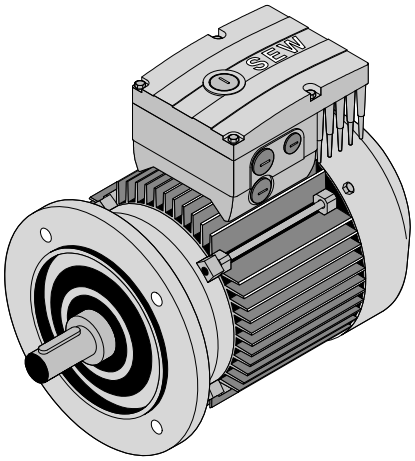

DFT, DFV../MM

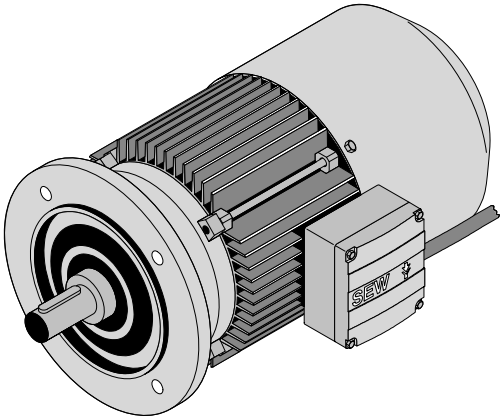

DFR../BR/IS, DFT, DFV../BM(G)/IS

50914AXX

8.2 Technical data DR/DT/DV/DTE/DVE

3000 1/min - S1

Motor type	P_N M_N [kW] [Nm]	n_N [rpm]	I_N 380 -415 V (400 V) [A]	cosφ	EFF3	$\eta_{75\%}$ $\eta_{100\%}$ [%]	I_A/I_N	M_A/M_N M_H/M_N	J_{Mot} 2) [10^{-4} kgm^2]	J_{Mot} 3) [10^{-4} kgm^2]	Z_0 BG[4] BGE[5] [1/h]	M_{Bmax} [Nm]	m[1] 2) [kg]	m[1] 3) [kg]
DR63S2	0.18 0.63	2720	0.46 (0.45)	0.88	-	-	4.2	2.4 2.2	3.6	4.8	5000 -	1.6	6.2	8.0
DR63M2	0.25 0.9	2660	0.66 (0.65)	0.86	-	-	3.5	2.2 1.9	3.6	4.8	4500 -	2.4	6.2	8.0
DR63L2	0.37 1.3	2650	1.0 (0.92)	0.87	-	-	3.5	2.1 1.9	4.4	5.6	4000 -	3.2	6.7	8.5
DT71D2	0.55 1.9	2700	1.75 (1.65)	0.78	-	-	3.2	2.2 1.9	4.6	5.5	2700 4600	5	7.0	9.9
DT80K2	0.75 2.7	2700	2.35 (2.0)	0.86	-	-	3.7	2.0 1.8	6.6	7.5	2100 5800	10	9.9	12.7
DT80N2	1.1 3.9	2700	2.7 (2.65)	0.84	EFF3	74.4 72.6	4.0	2.0 1.8	8.7	9.6	1800 3600	10	11.5	14.3
DT90S2	1.5 5.3	2800	3.95 (3.8)	0.82	EFF3	71.4 71.7	4.2	2.3 2.1	25	31	1300 2700	20	16	26
DT90L2	2.2 7.5	2810	5.8 (5.1)	0.82	EFF3	74.1 74.3	4.8	2.5 2.2	34	40	1150 2700	20	18	28
DV100M2	3 10.2	2800	6.4 (5.9)	0.94	EFF3	81.0 78.6	5.0	2.0 1.8	53	59	700 1800	40	27	37
DV112M2	4 13.3	2860	8.2 (8.1)	0.88	EFF3	83.4 82.4	5.6	2.3 1.8	98	110	- 700	55	36	45
DV132S2	5.5 18.2	2880	10.9 (10.5)	0.88	EFF3	85.7 85.0	6.6	2.5 2.2	146	158	- 540	75	45	54
DV132M2	7.5 24.7	2900	15.2 (15.2)	0.86	EFF3	85.5 86.2	6.8	2.3 1.1	280	330	- 540	100	66	90
DV132ML2	9.2 30.4	2890	19 (18.1)	0.87	EFF3	86.0 86.5	7.2	2.5 0.9	330	380	- 450	150	75	100
DV160M2	11 36.2	2900	21.5 (21)	0.88	EFF3	87.5 88.0	7.7	2.7 0.9	398	448	- 390	150	84	109
DV160L2[6]	15 48.9	2930	34 (32)	0.80	EFF3	84.4 85.7	6.0	2.7 1.4	925	1060	- -	200	124	166
DV180M2[6]	18.5 60.7	2930	38.0 (37.0)	0.85	EFF3	85.5 85.3	6.1	2.6 1.5	1120	1255	- -	300	147	188
DV180L2[6]	22 72.2	2930	45 (44.0)	0.85	EFF3	85.3 85.2	6.4	2.8 1.4	1290	1425	- -	300	158	200

1) Applies to flange motor

2) Without brake

3) With brake

4) Operation with BG brake control system

5) Operation with BGE brake control system

6) Design with brake: For standstill only; operational braking not possible. Contact SEW-EURODRIVE concerning emergency braking.



1500 1/min - S1

Motor type	P_N M_N [kW] [Nm]	n_N [rpm]	I_N 380 –415 V (400 V) [A]	cosφ	EFF 2	$\eta_{75\%}$ $\eta_{100\%}$ [%]	I_A/I_N	M_A/M_N M_H/M_N	J_{Mot} 2) 3) [10^{-4} kgm^2]		Z_0 BG[4] BGE[5] [1/h]	M_{Bmax} [Nm]	m[1] 2) 3) [kg]	
DT56M4	0.09 0.66	1300	0.31 (0.29)	0.68	-	-	2.6	2.1 1.8	1.1	1.2	10000 -	0.8	6)	
DT56L4	0.12 0.88	1300	0.46 (0.42)	0.68	-	-	2.6	2.2 1.9	1.1	1.2	10000 -	1.2		
DR63S4	0.12 0.83	1380	0.39 (0.39)	0.69	-	-	3.3	2.4 2.2	3.6	4.8	10000 -	2.4	6.1	7.6
DR63M4	0.18 1.3	1320	0.55 (0.55)	0.78	-	-	2.9	1.8 1.7	3.6	4.8	10000 -	3.2	6.1	7.6
DR63L4	0.25 1.8	1300	0.73 (0.68)	0.81	-	-	2.8	1.8 1.7	4.4	5.6	10000 -	3.2	6.7	8.2
DT71D4	0.37 2.6	1380	1.24 (1.15)	0.76	-	-	3.0	1.8 1.7	4.6	5.5	6000 9500	5	7.0	9.9
DT80K4	0.55 3.9	1360	1.75 (1.75)	0.72	-	-	3.4	2.1 1.8	6.6	7.5	4100 11000	10	9.9	12.7
DT80N4	0.75 5.2	1380	2.15 (2.1)	0.73	-	-	3.8	2.2 2.0	8.7	9.6	5200 14000	10	11.5	14.3
DT90S4	1.1 7.5	1400	2.8 (2.8)	0.77	EFF 2	77.5 76.5	4.3	2.0 1.9	25	31	2500 6300	20	16	26
DT90L4	1.5 10.2	1410	3.7 (3.55)	0.78	EFF 2	80.2 79.0	5.3	2.6 2.3	34	40	3000 7600	20	18	28
DV100M4	2.2 15	1410	4.9 (4.7)	0.83	EFF 2	82.8 82.0	5.9	2.7 2.3	53	59	1800 8500	40	27	37
DV100L4	3 20.5	1400	6.5 (6.3)	0.83	EFF 2	84.5 83.0	5.6	2.7 2.2	65	71	1800 7600	40	30	40
DV112M4	4 26.9	1420	8.7 (8.7)	0.84	EFF 2	85.9 84.2	5.4	2.4 2.1	98	110	- 3800	55	36	45
DV132S4	5.5 36.7	1430	11.4 (11.0)	0.85	EFF 2	87.6 85.7	6.0	2.7 2.4	146	158	- 3000	75	45	54
DV132M4	7.5 50.1	1430	15.5 (15.5)	0.85	EFF 2	89.5 87.5	6.2	2.1 2.0	280	330	- 1700	100	66	90
DV132ML4	9.2 61	1440	18.7 (18.1)	0.84	EFF 2	89.6 88.0	6.0	2.5 2.0	330	380	- 1200	150	75	100
DV160M4	11 72.9	1440	22.5 (22.5)	0.83	EFF 2	88.9 88.5	6.0	2.5 2.3	398	448	- 1200	150	84	109
DV160L4	15 98.1	1460	31.0 (29.5)	0.82	EFF 2	90.3 90.0	5.5	2.4 1.8	925	1060	- 1000	200	124	166
DV180M4	18.5 121	1465	38.5 (37)	0.80	EFF 2	90.8 90.0	5.9	2.6 2.0	1120	1255 1350[7]	- 1300	300 300[7]	147	188 192[7]
DV180L4	22 143	1465	46 (42.5)	0.82	EFF 2	91.4 90.5	6.0	2.7 2.0	1290	1425 1520[7]	- 650	300 300[7]	158	200 204[7]
DV200L4	30 195	1470	57 (55)	0.86	EFF 2	91.8 91.5	6.5	2.8 2.0	2340	2475 2570[7]	- 600	300 600[7]	244	295 299[7]
DV225S4	37 240	1470	70 (67)	0.87	EFF 2	93.2 92.5	6.5	2.8 2.0	3010	3145 3240[7]	- 360	300 600[7]	296	347 351[7]
DV225M4	45 292	1470	86 (83)	0.85	EFF 2	93.8 93.0	7.3	3.3 2.0	3570	3705 3800[7]	- 300	300 600[7]	325	377 381[7]
DV250M4	55 356	1475	106 (102)	0.83	EFF 2	94.0 93.8	6.0	2.7 2.0	6300	6600 6730[7]	- 200	600 1200[7]	448	528 538[7]
DV280S4	75 484	1480	142 (138)	0.83	EFF 2	94.2 94.4	7.2	3.2 2.2	8925	9225 9355[7]	- 150	600 1200[7]	520	600 610[7]
DV280M4	90 581	1480	173 (170)	0.81	EFF 2	94.4 94.5	7.1	3.3 2.2	8925	9225 9355[7]	- 100	600 1200[7]	520	600 610[7]

1) Applies to flange motor
2) Without brake
3) With brake
4) Operation with BG brake control system
5) Operation with BGE brake control system
6) In combination with helical gear units R07, RF07, R07F or Spiroplan® gear units W10, WF10, WA10, WAF10 only
7) Double disc brake

EFF1 motors (energy efficient motors) for Europe: 1500 1/min - S1

Motor type	P_N M_N [kW] [Nm]	n_N [rpm]	I_N 380 -415 V (400 V) [A]	cosφ	EFF	$\eta_{75\%}$ $\eta_{100\%}$ [%]	I_A/I_N	M_A/M_N M_H/M_N	J_{Mot} 2) [10^{-4} kgm^2]	J_{Mot} 3) [10^{-4} kgm^2]	Z_0 BG[4] BGE[5] [1/h]	M_{Bmax} [Nm]	m[1] 2) [kg]	m[1] 3) [kg]
DTE90S4	1.1 7.2	1460	2.45 (2.40)	0.78	EFF1	84.9 84.5	7.0	2.1 1.9	48	54	1850 4700	20	19	29
DTE90L4	1.5 9.8	1455	3.30 (3.15)	0.80	EFF1	86.0 85.7	7.1	2.2 2.2	58	64	2200 5600	20	23	33
DVE100M4	2.2 14.4	1455	4.70 (4.60)	0.80	EFF1	87.6 87.0	7.6	2.5 2.1	74	80	950 4500	40	29	39
DVE100L4	3 19.7	1455	6.4 (6.2)	0.80	EFF1	88.0 87.6	7.6	2.4 2.1	89	95	950 4000	40	32	42
DVE112M4	4 26.2	1460	8.4 (8.1)	0.80	EFF1	89.7 89.0	6.0	2.2 1.8	188	200	- 2550	55	46	58
DVE132S4	5.5 36.1	1455	11.2 (10.7)	0.83	EFF1	90.7 89.6	6.0	2.1 1.7	248	260	- 2000	75	61	76
DVE132M4	7.5 48.9	1465	15.6 (14.9)	0.81	EFF1	91.4 90.8	5.7	1.9 1.7	427	477	- 1500	100	78	102
DVE160M4	11 72.0	1460	22.5 (22.0)	0.81	EFF1	92.4 91.6	5.8	2.0 1.7	556	606	- 1050	150	96	121
DVE160L4	15 97.1	1475	30.5 (29.5)	0.81	EFF1	93.3 93.0	5.3	2.0 1.5	1216	1351	- 870	200	136	178
DVE180M4	18.5 120	1475	38.5 (35.0)	0.82	EFF1	94.0 93.6	5.6	2.1 1.7	1516	1651 1746[6]	- 740	300 300[6]	193	234 238[6]
DVE180L4	22 142	1475	42.5 (40.0)	0.84	EFF1	94.4 94.0	5.7	2.1 1.7	1816	1951 2046[6]	- 570	300 300[6]	239	281 285[6]
DVE200L4	30 193	1485	58 (56)	0.83	EFF1	94.3 94.4	7.1	2.1 1.8	3278	3413 3508[6]	- 530	300 600[6]	273	324 328[6]
DVE225S4	37 238	1485	70 (67)	0.85	EFF1	94.8 94.7	6.8	2.1 1.7	4078	4213 4308[6]	- 320	300 600[6]	327	378 382[6]
DVE250M4	45 290	1480	88 (86)	0.81	EFF1	94.0 94.3	7.1	3.3 2.5	6300	6600 6730[6]	- -	300 600[6]	448	528 538[6]
DVE250M4	55 356	1475	106 (102)	0.83	EFF1	94.2 94.0	6.0	2.7 2.0	6300	6600 6730[6]	- -	600 1200[6]	520	600 610[6]
DVE280S4	75 484	1480	142 (137)	0.83	EFF1	94.5 95.0	7.2	3.2 2.2	8925	9225 9355[6]	- -	600 1200[6]	520	600 610[6]
DVE280M4	90 581	1480	171 (168)	0.81	EFF1	95.1 95.0	7.1	3.3 2.2	8925	9225 9355[6]	- -	600 1200[6]	520	600 610[6]

1) Applies to flange motor
2) Without brake
3) With brake
4) Operation with BG brake control system
5) Operation with BGE brake control system
6) Double disc brake



EFF1 motors (energy efficient motors) for Australia and New Zealand: 1500 1/min - S1

Motor type	P_N M_N [kW] [Nm]	n_N [rpm]	I_N 380 -415 V (400 V) [A]	cosφ	EFF[1]	$\eta_{75\%}$ $\eta_{100\%}$ [%]	I_A/I_N	M_A/M_N M_H/M_N	J_{Mot} [10^{-4} kgm^2] 3)	J_{Mot} [10^{-4} kgm^2] 4)	Z_0 BG[5] BGE[6] [1/h]	M_{Bmax} [Nm]	$m^{2)}$ [kg] 3)	$m^{2)}$ [kg] 4)
DTE90K4	0.75 5.0	1440	1.87 (1.84)	0.74	AS/ NZS	79.8 80.5	5.9	3.0 2.4	25	31	2000 5100	20	16	26
DTE90S4	1.1 7.2	1460	2.45 (2.40)	0.78	EFF1	82.4 82.8	7.0	2.1 1.9	48	54	1850 4700	20	19	29
DTE90L4	1.5 9.8	1455	3.30 (3.15)	0.80	EFF1	84.3 84.1	7.1	2.2 2.2	58	64	2200 5600	20	23	33
DVE100M4	2.2 14.4	1455	4.70 (4.60)	0.80	EFF1	85.8 85.5	7.6	2.5 2.1	74	80	950 4500	40	29	39
DVE100L4	3 19.7	1455	6.4 (6.2)	0.80	EFF1	86.9 86.3	7.6	2.4 2.1	89	95	950 4000	40	32	42
DVE112M4	4 26.2	1460	8.4 (8.1)	0.80	EFF1	88.1 87.2	6.0	2.2 1.8	188	200	- 2550	55	46	58
DVE132S4	5.5 36.1	1455	11.2 (10.7)	0.83	EFF1	89.4 88.1	6.0	2.1 1.7	248	260	- 2000	75	61	76
DVE132M4	7.5 48.9	1465	15.6 (14.9)	0.81	EFF1	90.1 88.9	5.7	1.9 1.7	427	477	- 1500	100	78	102
DVE160M4	11 72.0	1460	22.5 (22.0)	0.81	EFF1	91.2 89.9	5.8	2.0 1.7	556	606	- 1050	150	96	121
DVE160L4	15 97.1	1475	30.5 (29.5)	0.81	EFF1	92.4 91.8	5.3	2.0 1.5	1216	1351	- 870	200	136	178
DVE180M4	18.5 120	1475	38.5 (35.0)	0.82	EFF1	92.9 92.2	5.6	2.1 1.7	1516	1651 1746[7]	- 740	300 300[7]	193	234 238[7]
DVE180L4	22 142	1475	42.5 (40.0)	0.84	EFF1	93.5 92.8	5.7	2.1 1.7	1816	1951 2046[7]	- 570	300 300[7]	239	281 285[7]
DVE200L4	30 193	1485	58 (56)	0.83	EFF1	93.1 92.8	7.1	2.1 1.8	3278	3413 3508[7]	- 530	300 600[7]	273	324 328[7]
DVE225S4	37 238	1485	70 (67)	0.85	EFF1	93.8 93.2	6.8	2.1 1.7	4078	4213 4308[7]	- 320	300 600[7]	327	378 382[7]
DVE250M4	45 290	1480	88 (86)	0.81	EFF1	94.1 94.3	7.1	3.3 2.5	6300	6600 6730[7]	- -	300 600[7]	448	528 538[7]
DVE250M4	55 356	1475	106 (102)	0.83	EFF1	94.0 93.7	6.0	2.7 2.0	6300	6600 6730[7]	- -	600 1200[7]	520	600 610[7]
DVE280S4	75 484	1480	142 (137)	0.83	EFF1	94.3 94.3	7.2	3.2 2.2	8925	9225 9355[7]	- -	600 1200[7]	520	600 610[7]
DVE280M4	90 581	1480	171 (168)	0.81	EFF1	95.1 95.0	7.1	3.3 2.2	8925	9225 9355[7]	- -	600 1200[7]	520	600 610[7]

1) Efficiency according to AS/NZS 1359.102.3 (method A)
2) Applies to flange motor
3) Without brake
4) With brake
5) Operation with BG brake control system
6) Operation with BGE brake control system
7) Double disc brake

1000 1/min - S1

Motor type	P_N	M_N	n_N	I_N 380 -415 V (400 V)	cosφ	I_A/I_N	M_A/M_N M_H/M_N	J_{Mot} 2)	J_{Mot} 3)	Z_0 BG[4] BGE[5]	M_{Bmax}	m[1] 2)	m[1] 3)
	[kW]	[Nm]	[rpm]	[A]				[10^{-4} kgm^2]		[1/h]	[Nm]	[kg]	
DR63S6	0.09	0.95	900	0.42 (0.38)	0.64	2.2	1.8 1.6	5.4	6.6	20000 -	2.5	6.0	7.5
DR63M6	0.12	1.2	900	0.62 (0.58)	0.65	2.1	1.8 1.7	5.4	6.6	20000 -	3.2	6.0	7.5
DR63L6	0.18	2	870	0.81 (0.78)	0.70	2.2	1.6 1.5	6.8	8.0	20000 -	3.2	6.6	8.1
DT71D6	0.25	2.7	880	0.9 (0.85)	0.72	2.7	1.6 1.6	8.3	9.2	8500 18000	5	7.0	9.9
DT80K6	0.37	3.9	900	1.44 (1.29)	0.68	3.0	1.9 1.9	10.3	11.2	5800 16000	10	9.9	12.7
DT80N6	0.55	5.8	900	1.78 (1.7)	0.73	3.0	1.8 1.7	14.1	15	7500 18000	10	11.5	14.3
DT90S6	0.75	8	900	2.4 (2.35)	0.70	3.1	2.0 1.9	25	31	4000 10000	20	16	26
DT90L6	1.1	11.4	920	3.35 (3.3)	0.69	3.5	2.2 2.1	34	40	3500 8500	20	18	28
DV100M6	1.5	15.6	920	4.1 (4.05)	0.70	4.0	2.3 2.0	53	59	2400 7200	40	27	37
DV112M6	2.2	22.3	940	5.9 (5.7)	0.71	4.2	1.9 1.9	98	110	- 4500	55	36	45
DV132S6	3	30.4	940	8.0 (7.8)	0.70	4.6	2.2 2.2	146	158	- 3600	75	45	54
DV132M6	4	39.8	960	10.0 (10.0)	0.70	5.9	2.1 2.1	430	480	- 2900	100	66	90
DV132ML6	5.5	54.7	960	13.8 (12.9)	0.70	5.7	2.1 2.0	524	574	- 2700	150	75	100
DV160M6	7.5	74.6	960	17.8 (16.7)	0.76	5.0	1.8 1.6	650	700	- 1800	150	84	109
DV160L6	11	109	960	23.5 (22)	0.77	6.5	2.2 1.7	1340	1475	- 1500	200	130	172
DV180L6	15	148	970	32 (31.5)	0.83	6.5	2.2 1.6	2010	2145 2240[6]	- 1200	300 300[6]	164	205 209[6]
DV200LS6	18.5	182	970	38 (37)	0.80	5.0	2.2 1.7	2990	3125 3220[6]	- 900	300 600[6]	220	271 275[6]
DV200L6	22	217	970	46 (43.5)	0.80	4.7	2.2 1.7	3490	3625 3720[6]	- 700	300 600[6]	244	295 299[6]
DV250M6	37	360	980	85 (82)	0.71	4.5	2.4 1.6	6300	6600 6730[6]	- 240	600 1200[6]	448	528 538[6]
DV280S6	45	436	985	105 (103)	0.68	4.9	2.6 1.8	8925	9225 9355[6]	- 180	600 1200[6]	520	600 610[6]

1) Applies to flange motor
2) Without brake
3) With brake
4) Operation with BG brake control system
5) Operation with BGE brake control system
6) Double disc brake



750 1/min - S1

Motor type	P_N	M_N	n_N	I_N 400 V	cosφ	I_A/I_N	M_A/M_N M_H/M_N	J_{Mot} 2)	J_{Mot} 3)	Z_0 BG[4] BGE[5]	M_{Bmax}	$m^{1)}$ 2)	$m^{1)}$ 3)
	[kW]	[Nm]	[rpm]	[A]				[10^{-4} kgm^2]		[1/h]	[Nm]	[kg]	
DT71D8	0.15	2.2	650	0.69	0.72	2.2	1.4 1.4	8.3	9.2	10000 21000	5	7.0	9.9
DT80N8	0.25	3.5	680	1.24	0.55	2.6	1.9 1.9	14.1	15	6000 17000	10	11.5	14.3
DT90S8	0.37	5.2	680	1.55	0.62	2.5	1.4 1.4	25	31	4600 11000	20	16	26
DT90L8	0.55	7.7	680	2.3	0.60	2.5	1.5 1.5	34	40	3900 9500	20	18	28
DV100M8	0.75	10.3	690	2.9	0.59	2.6	2.1 2.0	53	59	3300 8700	40	27	37
DV100L8	1.1	15.6	670	4.1	0.60	2.8	1.9 1.7	65	71	2800 8100	40	30	40
DV112M8	1.5	20.4	700	5.1	0.62	3.4	1.7 1.6	98	110	- 5500	55	36	45
DV132S8	2.2	30	700	7.1	0.62	3.4	1.9 1.9	146	158	- 4100	75	45	54
DV132M8	3	39.7	720	9.0	0.65	4.0	1.8 2.0	430	480	- 3200	100	66	90
DV132ML8	4	53	720	12.4	0.67	4.2	1 8 1.6	524	574	- 2700	150	75	100
DV160M8	5.5	74	710	15.8	0.65	4.5	1.8 1.5	650	700	- 2300	150	84	109
DV160L8	7.5	99.4	720	19	0.73	5.2	1.8 1.7	1340	1475	- 1600	200	130	172
DV180L8	11	145	720	25.5	0.72	5.2	2.0 1.8	2010	2145 2240[6)]	- 1300	300 300[6)]	164	205 209[6)]
DV200L8	15	198	720	33.5	0.74	3.8	2.0 1.8	3490	3625 3720[6)]	- 900	300 600[6)]	244	295 299[6)]

1) Applies to flange motor
2) Without brake
3) With brake
4) Operation with BG brake control system
5) Operation with BGE brake control system
6) Double disc brake

750/3000 1/min - S3 - 40/60 % cdf (SDT/SDV: 40/100 % cdf)

Motor type	P_N [kW]	n_N [rpm]	I_N 400 V [A]	cosφ	I_A/I_N	M_A/M_N	M_H/M_N	J_{Mot} [10^{-4} kgm^2] 2)	J_{Mot} [10^{-4} kgm^2] 3)	Z_0 BG[4] [1/h]	Z_0 BGE[5] [1/h]	M_{Bmax} [Nm]	m[1] [kg] 2)	m[1] [kg] 3)
DT71D8/2	0.06 0.25	675 2670	0.45 0.70	0.66 0.89	1.9 3.1	1.4 2.0	1.4 1.8	4.4	5.3	20000 7000	27000 9000	2.5	7.2	10.8
DT80K8/2	0.1 0.4	660 2730	0.80 1.15	0.62 0.85	1.5 3.4	1.7 1.8	1.6 1.7	6.6	7.5	15000 7000	20000 9000	5	10.5	14.1
DT80K8/2	0.15 0.6	660 2710	1.00 1.70	0.60 0.89	1.6 3.7	1.6 2.1	1.6 2.1	8.7	9.6	5000 4000	6300 5000	5	11.8	15.4
SDT90S8/2	0.22 0.9	650 2680	1.61 2.55	0.61 0.82	1.7 3.3	1.7 2.5	1.6 2.3	25	30.4	15000 2500	20000 3500	10	16	25
SDT90L8/2	0.3 1.3	630 2680	1.75 3.35	0.64 0.84	2.0 4.2	1.7 2.7	1.6 2.4	34	39.4	15000 2500	20000 3300	10	18	27
SDT100LS8/2	0.45 1.8	630 2680	2.40 4.20	0.62 0.89	2.0 4.0	1.7 2.4	1.6 2.2	42.7	48.1	7000 1800	9000 2600	20	23	32
SDT100L8/2	0.6 2.4	630 2700	3.05 5.3	0.60 0.90	2.0 4.5	1.8 2.6	1.7 2.2	53	58.4	4500 1800	9000 2600	20	27	37
SDV112M8/2	0.8 3.0	680 2730	3.95 6.9	0.55 0.84	2.2 4.0	1.4 2.0	1.6 1.8	98	110.2	-	8000 1200	30	36	45
SDV132S8/2	1.0 4.0	690 2730	5.2 8.6	0.54 0.90	2.6 4.5	1.4 2.0	1.6 1.8	146	158	-	6000 1200	37	45	54
DV132M8/2	1.2 4.8	710 2850	4.9 10	0.57 0.88	3.5 6.3	2.3 2.7	2.3 2.0	280	330	-	3600 550	50	65	89
DV132ML8/2	1.5 6.0	710 2850	5.5 12	0.57 0.90	3.8 6.7	2.2 3.0	2.3 2.0	330	380	-	3400 470	75	75	96
DV160M8/2	1.9 7.5	710 2850	7.1 14.5	0.56 0.91	3.5 6.3	2.4 3.0	2.5 1.8	398	448	-	2600 300	75	85	106
DV160L8/2[6]	2.8 11	725 2920	10.5 29.5	0.53 0.68	3.4 5.6	2.2 3.0	1.9 2.0	925	1060	-	1800 220	100	123	159
DV180M8/2[6]	3.3 13	725 2940	12.1 32	0.52 0.70	3.5 6.5	2.4 3.2	2.1 2.3	1120	1255 1350[7]	-	1500 190	150 150[7]	143	179 192[7]
DV180L8/2[6]	4 16	720 2950	13.5 45.0	0.58 0.63	3.2 6.3	1.9 3.6	1.6 2.6	1290	1425 1520[7]	-	1300 160	150 150[7]	154	190 192[7]
DV200L8/2[6]	5 20	730 2930	15.8 42	0.57 0.86	4.0 7.5	3.0 3.5	2.5 2.5	2340	2475 2570[7]	-	450 160	150 300[7]	250	292 296[7]
DV225S8/2[6] [8]	6 24	730 2930	19 47.5	0.56 0.90	4.2 8.0	3.3 3.3	3.0 2.2	3010	3145 3240[7]	-	360 77	150 300[7]	298	340 355[7]
DV225M8/2[6] [8]	7.5 30	730 2940	24 61	0.56 0.90	4.6 9.5	3.3 3.5	3.0 2.1	3570	3705 3800[7]	-	270 60	150 300[7]	319	361 365[7]

1) Applies to flange motor
2) Without brake
3) With brake
4) Operation with BG brake control system
5) Operation with BGE brake control system
6) Do not brake out of 2-pole speed. Contact SEW-EURODRIVE concerning emergency braking.
7) Double disc brake
8) Available in ⅄ / Δ only



750/1500 1/min - S1

Motor type	P_N [kW]	n_N [rpm]	I_N 400 V [A]	cosφ	I_A/I_N	M_A/M_N	M_H/M_N	J_{Mot} [10^{-4} kgm^2] 2)	J_{Mot} [10^{-4} kgm^2] 3)	Z_0 BG[4] [1/h]	Z_0 BGE[5] [1/h]	M_{Bmax} [Nm]	m[1] [kg] 2)	m[1] [kg] 3)
DT71D8/4	0.10 0.18	650 1380	0.49 0.54	0.70 0.85	2.2 3.3	1.7 1.5	1.6 1.4	6.6	7.5	7000 4000	12000 7000	5	7.3	10.9
DT80K8/4	0.16 0.3	650 1380	0.76 0.86	0.68 0.83	1.9 3.0	1.5 1.5	1.5 1.5	10.3	11.2	6000 3500	11000 6000	10	10	13.6
DT80K8/4	0.22 0.4	670 1400	1.02 1.14	0.66 0.83	2.1 3.5	1.7 1.6	1.7 1.6	14.1	15	5500 3400	10000 6000	10	11.4	15
DT90S8/4	0.3 0.6	700 1400	1.7 1.7	0.58 0.84	2.5 4.3	1.7 1.6	1.7 1.5	25	30.4	3500 2800	9000 5000	20	16	25
DT90L8/4	0.44 0.88	700 1400	2.1 2.2	0.56 0.84	2.4 4.2	1.9 1.7	2.1 1.7	34	39.4	3200 2500	7200 4300	20	18	27
DV100M8/4	0.66 1.3	700 1420	2.55 2.85	0.57 0.84	3.2 5.0	2.0 1.9	1.9 1.7	53	59	2600 2000	5600 3600	40	27	37
DV100L8/4	0.9 1.8	690 1410	3.5 3.95	0.57 0.84	2.9 4.8	1.9 2.0	1.8 1.8	65	71	2500 1500	5000 2700	40	30	40
DV112M8/4	1.2 2.2	700 1440	4.25 4.75	0.58 0.86	3.4 5.8	1.9 1.9	1.8 1.3	98	110	-	4000 2000	55	36	45
DV132S8/4	1.8 3.3	700 1440	7.2 7.1	0.57 0.86	3.7 6.3	2.3 2.1	2.3 1.9	146	158	-	3100 1500	75	45	54
DV132M8/4	2.2 4.4	700 1410	7.0 8.9	0.60 0.88	3.9 5.7	2.2 2.2	2.2 2.0	280	330	-	3000 1500	100	66	90
DV132ML8/4	2.7 5.5	700 1400	8.3 10.9	0.62 0.84	3.6 5.3	2.3 2.2	2.2 2.0	330	380	-	2700 1400	150	75	96
DV160M8/4	3.8 7.5	720 1460	11.8 14.7	0.60 0.85	3.8 6.0	2.8 2.8	2.7 2.7	398	448	-	2000 1400	150	85	106
DV160L8/4	5.5 10	720 1460	18.1 20	0.55 0.83	3.1 5.7	1.7 2.3	1.8 1.8	925	1060	-	1600 1200	200	120	156
DV180L8/4	7.5 15	730 1470	26 30.5	0.51 0.81	3.5 6.0	2.5 2.5	2.2 2.2	1290	1425 1520[6]	-	1100 1000	300 300[6]	154	190 194[6]
DV200LS8/4	12 20	730 1470	34.5 39.5	0.60 0.84	4.1 5.1	2.6 2.3	1.8 1.7	2990	3125 3220[6]		1000 800	300 600[6]	222	264 268[6]
DV200L8/4	14 22	730 1470	34.5 40.5	0.66 0.88	4.8 6.4	2.9 2.6	2.3 2.5	3490	3625 3720[6]	-	900 700	300 600[6]	232	274 278[6]
DV225S8/4	18.5 28	730 1470	44.5 51	0.70 0.90	4.3 5.8	2.5 2.3	2.0 2.0	4487	4622 4717[6]	-	700 500	300 600[6]	308	350 354[6]
DV225M8/4	25 34	730 1470	57 62	0.72 0.88	3.8 6.0	2.2 2.5	1.7 1.9	5318	5453 5448[6]	-	600 450	300 600[6]	330	372 376[6]

1) Applies to flange motor
2) Without brake
3) With brake
4) Operation with BG brake control system
5) Operation with BGE brake control system
6) Double disc brake

8.3 Technical data brake and brake control

Technical data brake

The following table lists the technical data of the brakes. The type and number of brake springs determines the level of the braking torque. Maximum braking torque M_{Bmax} is installed as standard, unless specified otherwise in the order. Other brake spring combinations can result in reduced braking torque values M_{Bred}.

Brake Type	For motor size	M_{Bmax} [Nm]	Reduced braking torques M_{Bred} [Nm]							W [10^6 J]	t_1 [10^{-3}s]	t_2		P_B [W]
												t_2II [10^{-3}s]	t_2I [10^{-3}s]	
BMG02	**DT56**	1.2	0.8							15	28	10	100	25
BR03	**DR63**	3.2	2.4	1.6	0.8					200	25	3	30	26
BMG05	**DT71 DT80**	5.0	4	2.5	1.6	1.2				120	30 / 20 [1)]	5	35	32
BMG1	**DT80**	10	7.5	6						120	50 / 20 [1)]	8	40	36
BMG2	**DT90 DV100**	20	16	10	6.6	5				260	70 / 30 [1)]	12	80	40
BMG4	**DV100**	40	30	24						260	130 / 35 [1)]	15	80	50
BMG8	**DV112M**	55	45	37	30	19	12.6	9.5		600	30	12	60	70
	DV132S	75	55	45	37	30	19	12.6	9.5	600	35	10	50	70
BM15	**DV132M**	100	75	50	35	25				1000	40	14	70	95
	DV132ML DV160M	150	125	100	75	50	35	25		1000	50	12	50	95
BM30	**DV160L**	200	150	125	100	75	50			1500	55	18	90	120
	DV180M/L	300	250	200	150	125	100	75	50	1500	60	16	80	120
BM31	**DV200/225**	300	250	200	150	125	100	75	50	1500	60	16	80	120
BM32 [2)]	**DV180M/L**	300	250	200	150	100				1500	55	18	90	120
BM62 [2]	**DV200/225**	600	500	400	300	250	200	150	100	1500	60	16	80	120
BMG61	**DV250/280**	600	500	400	300	200				2500	90	25	120	195
BMG122 [2]	**DV250/280**	1200	1000	800	600	400				2500	90	25	120	195

1) For operation with brake control system BGE/BME

2) Double disc brake

$M_{B\,max}$ = Maximum braking torque

$M_{B\,red}$ = Reduced braking torque

W = Braking work until service

t_1 = Response time

t_2I = Brake application time for cut-off in the AC circuit

t_2II = Brake application time for cut-off in the DC and AC circuit

P_B = Braking power

The response and application times are recommended values in relation to the maximum braking torque.

Current and braking torque

The following illustrations show the dependency of coil current and braking torque.

Cut-off in the AC circuit:

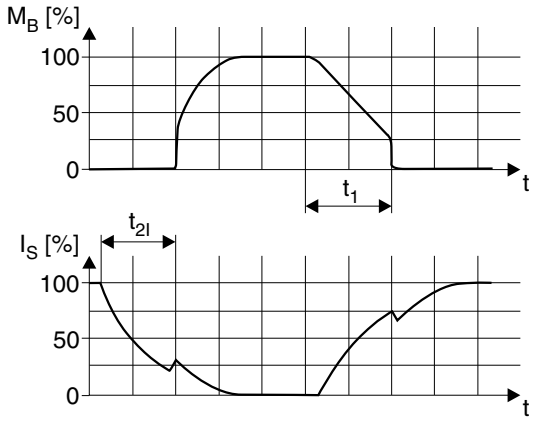

04371AXX

Figure 5: Current and braking torque for cut-off in the AC circuit

Cut-off in the DC and AC circuits:

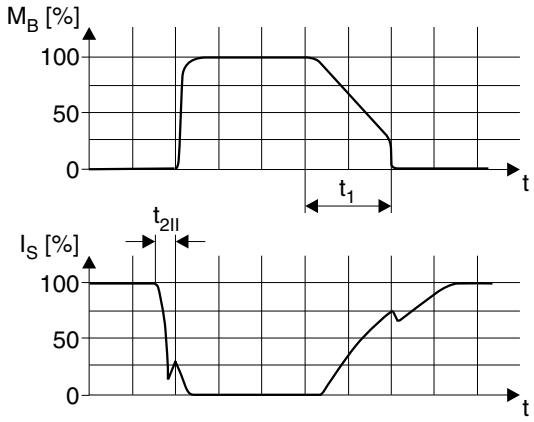

04372AXX

Figure 6: Current and braking torque for cut-off in the DC and AC circuits

M_B = Braking torque

I_S = Coil current

Actuating force with manual brake release

In brakemotors with the ../HR "brake with self-re-engaging manual brake release", you can release the brake manually using the provided lever. The following table specifies the actuation force required at maximum braking torque to release the brake by hand. The values are based on the assumption that you operate the lever at the upper end. The length of that part of the manual lever projecting out of the fan guard is stated as well.

Brake type	Actuation force F_H [N]	Lever length L_H [mm]	
BR03	20	31	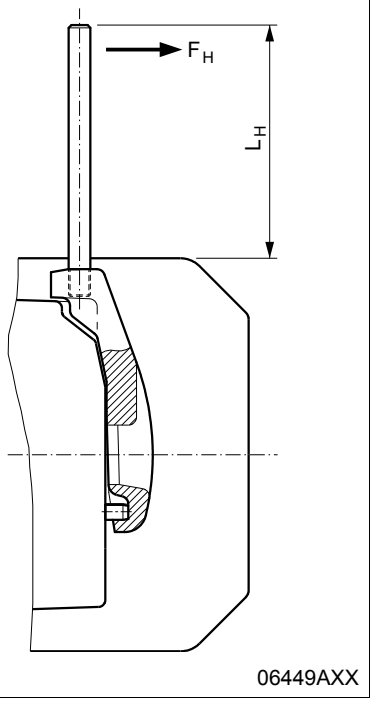
BMG05	20	86	
BMG1	40	86	
BMG2	70	83.5	
BMG4	140	83.5	
BMG8	170	133.5	
BM15	280	187.5	
BM30, BM32	500	274.5	
BM31, BM62	500	243	
BMG61, BMG122	500	355	



Technical data brake control

Wiring space of the motor

The following table lists the technical data of brake control systems for installation in the motor wiring space and the assignments with regard to motor size and connection technology. The different housings have different colors (= color code) to make them easier to distinguish.

Type	Function	Voltage	Holding current I_{Hmax} [A]	Type	Part number	Color code
BG	One-way rectifier	90..500 V_{AC}	1.2	BG 1.2	826 992 0	Black
		24...90 V_{AC}	2.4	BG 2.4	827 019 8	Brown
		42..500 V_{AC}	1.5	BG 1.0	825 590 3	Black
		150..500 V_{AC}	1.5	BG 1.5	825 384 6	Black
		42..500 V_{AC}	3.0	BG 3	825 386 2	Brown
BGE	One-way rectifier with electronic switching function	150..500 V_{AC}	1.5	BGE 1.0	827 599 8	Red
		150..500 V_{AC}	1.5	BGE 1.5	825 385 4	Red
		42...150 V_{AC}	3.0	BGE 3	825 387 0	Blue
BSR	One-way rectifier + current relay for cut-off in the DC circuit	90..500 V_{AC}	1.2	BG1.2 + SR 11	826 992 0 + 826 761 8	
		42...87 V_{AC}	2.4	BG2.4 + SR 11	827 019 8 + 826 761 8	
		150..500 V_{AC}	1.0	BGE 1.5 + SR 11	825 385 4 + 826 761 8	
			1.0	BGE 1.5 + SR 15	825 385 4 + 826 762 6	
			1.0	BGE 1.5 + SR 19	825 385 4 + 826 246 2	
		42...150 V_{AC}	1.0	BGE 3 + SR11	825 387 0 + 826 761 8	
			1.0	BGE 3 + SR15	825 387 0 + 826 762 6	
			1.0	BGE 3 + SR19	825 387 0 + 826 246 2	
BUR	One-way rectifier + voltage relay for cut-off in the DC circuit	90...150 V_{AC}	1.2	BG 1.2 + UR 11	826 992 0 + 826 758 8	
		42...87 V_{AC}	2.4	BG 2.4 + UR 11	827 019 8 + 826 758 8	
		150..500 V_{AC}	1.2	BG 1.2 + UR 15	826 992 0 + 826 759 6	
		150..500 V_{AC}	1.0	BGE 1.5 + UR 15	825 385 4 + 826 759 6	
		42...150 V_{AC}	1.0	BGE 3 + UR 11	825 387 0 + 826 758 8	
BS	Varistor protection circuit	24 V_{DC}	5.0	BS24	826 763 4	Aqua
BSG	Electronic switching	24 V_{DC}	5.0	BSG	825 459 1	White

Type	Design	Standard Terminal box	IS integrated plug connector	Plug connector ASD.., AMD..	Plug connector ACB.., ACE.., AMB.., AME.., ASB.., ASE..	Plug connector ABB.., ABE.., ADB.., ADE..
BG	BG1.2	DT56-DR63	DR63	DR63	-	-
	BG2.4	DT56-DR63	DR63	DR63	-	-
	BG1.2, BG2.4	-	DT71-DT90	-	-	-
	BG1.5	DT71-DV100	DV100	-	DT71-DV100	-
	BG3	DT71-DV100	DV100	-	DT71-DV100	-
BGE	BGE1.0	-	DT71-DT90	-	-	-
	BGE1.5	DT71-DV280	DV100-DV132S	-	DT71-DV132S	DT71-DV180
	BGE3	DT71-DV225	DV100-DV132S	-	DT71-DV132S	DT71-DV180
BSR	BG1.2 + SR11	DR63	DR63	DR63	-	-
	BG2.4 + SR11	DR63	DR63	DR63	-	-
	BG1.2 + SR11	-	DT71-DT90	-	-	-
	BGE1.5 + SR11	DT71-DV225	DV100-DV132S	-	DT71-DV132S	DT71-DV180
	BGE1.5 + SR15	DT71-DV225	DV100-DV132S	-	DT71-DV132S	DT71-DV180
	BGE1.5 + SR19	DV200-DV225	-	-	-	-
	BGE3 + SR11	DT71-DV225	DV100-DV132S	-	DT71-DV132S	DT71-DV180
	BGE3 + SR15	DT71-DV225	DV100-DV132S	-	DT71-DV132S	DT71-DV180
	BGE3 + SR19	DV200-DV225	-	-	-	-
BUR	BG1.2 + UR11	DR63	DR63	DR63	-	-
	BG1.2 + UR15	DR63	DR63	DR63	-	-
	BG2.4 + UR11	DR63	DR63	DR63	-	-
	BG1.2 + UR11	-	DT71-DT90	-	-	-
	BGE1.5 + UR15	DT71-DV225	DV100-DV132S	-	DT71-DV132S	DT71-DV180
	BGE3 + UR11	DT71-DV225	DV100-DV132S	-	DT71-DV132S	DT71-DV180
BS	BS24	DT71-DV100	DV100	-	DT71-DV100	
BSG	BSG	DT71-DV225	DV100-DV132S	-	DT71-DV132S	DT71-DV180

Control cabinet

The following tables list the technical data of brake control systems for installation in the control cabinet, and the assignment regarding the motor size and connection technology. The different housings have different colors (= color code) to make them easier to distinguish.

Type	Function	Voltage	Holding current I_{Hmax} [A]	Type	Part number	Color code
BMS	One-way rectifier such as BG	150...500 V_{AC}	1.5	BMS 1.5	825 802 3	Black
		42...150 V_{AC}	3.0	BMS 3	825 803 1	Brown
BME	One-way rectifier with electronic switching such as BGE	150..500 V_{AC}	1.5	BME 1.5	825 722 1	red
		42...150 V_{AC}	3.0	BME 3	825 723 X	Blue
BMH	One-way rectifier with electronic switching and heating function	150..500 V_{AC}	1.5	BMH 1.5	825 818 X	green
		42...150 V_{AC}	3	BMH 3	825 819 8	Yellow
BMP	One-way rectifier with electronic switching, integrated voltage relay for cut-off in the DC circuit	150..500 V_{AC}	1.5	BMP 1.5	825 685 3	White
		42...150 V_{AC}	3.0	BMP 3	826 566 6	Light blue
BMK	One-way rectifier with electronic switch mode, 24 V_{DC} control input and separation in the DC circuit	150..500 V_{AC}	1.5	BMK 1.5	826 463 5	Aqua
		42...150 V_{AC}	3.0	BMK 3	826 567 4	Bright red
BMV	Brake control unit with electronic switching, 24 V_{DC} control input and fast cut-off	24 V_{DC}	5.0	BMV 5	1 300 006 3	White

Type	Design	Standard Terminal box	IS Integrated IS plug connector	Plug connector APG1	Plug connector ASD.., AMD..	Plug connector ACB.., ACE.., AMB.., AME.., ASB.., ASE..	Plug connector ABB.., ABE.., ADB.., ADE..
BMS	BMS 1.5 BMS 3	DT56-DV100	DR63-DV100	DT71-DT90	DR63	DT71-DV100	DT71-DV100
BME	BME 1.5 BME 3	DR63-DV280	DR63-DV132S			DT71-DV132S	DT71-DV180
BMP	BMP 1.5 BMP 3	DR63-DV225					
BMK	BMK 1.5 BMK 3						
BMH	BMH 1.5 BMH 3	DR63-DV225					
BMV	BMV 5						

Operating currents

The following tables list the operating currents of the brakes at different voltages. The following values are specified:

- Inrush current ratio I_B/I_H; I_B = accelerator current, I_H = holding current
- Holding current I_H
- Direct current I_G with direct direct current supply at rated voltage U_N (V_{DC}) permitted up to brake size BMG4 only
- Rated voltage U_N (rated voltage range)

The accelerator current I_B (= inrush current) only flows for a short time (ca. 120 ms) when the brake is released or during voltage dips below 70% of rated voltage. When the BG brake control system or direct DC voltage supply is used (only possible to brake size BMG4), increased inrush current does not occur.

The values for the holding currents I_H are r.m.s. values. Use suitable measuring instruments for current measurements.

Brake			**BMG02**		**BR03**	
For motor size			56		63	
$M_{B\ max}$ [Nm]			1.2		3.2	
P_B [W]			25		26	
Inrush current ratio I_B/I_H			-		4	
Rated voltage U_N			I_H [A_{AC}]	I_G [A_{DC}]	I_H [A_{AC}]	I_G [A_{DC}]
V_{AC}		**V_{DC}**				
		24	-	0.72	-	0.95
24	(23-26)	**10**	-	-	1.96	2.47
42	(40-45)	**18**	-	-	1.06	1.34
60	(57-63)	**24**	-	-	0.75	0.95
110	(99-110)	**44**	-	-	0.42	0.53
120	(111-123)	**48**	-	-	0.375	0.48
133	(124-138)	**54**	-	-	0.335	0.42
208	(194-217)	**85**	-	-	0.21	0.26
230	(218-243)	**96**	0.14	0.18	0.19	0.24
254	(244-273)	**110**	-	-	0.168	0.21
290	(274-306)	**125**	-	-	0.149	0.19
318	(307-343)	**140**	-	-	0.133	0.16
360	(344-379)	**150**	-	-	0.119	0.15
400	(380-431)	**170**	0.08	0.10	0.109	0.14
460	(432-500)	**190**	-	-	0.094	0.11
500	(500)	**217**	0.07	0.09	-	-

Brake			BMG05		BMG1		BMG2		BMG4	
For motor size			71-80		80		90-100		100	
$M_{B\ max}$ [Nm]			5.0		10		20		40	
P_B [W]			32		36		40		50	
Inrush current ratio I_B/I_H			4		4		4		4	
Rated voltage U_N			I_H [A_{AC}]	I_G [A_{DC}]	I_H [A_{AC}]	I_G [A_{DC}]	I_H [A_{AC}]	I_G [A_{DC}]	I_H [A_{AC}]	I_G [A_{DC}]
V_{AC}		V_{DC}								
		24	-	1.38	-	1.54	-	1.77	-	2.20
24	(23-25)	**10**	2.0	3.3	2.3	3.7	-	-	-	-
42	(40-46)	**18**	1.18	1.74	1.26	1.94	1.43	2.25	1.87	2.80
48	(47-52)	**20**	1.05	1.55	1.13	1.73	1.28	2.00	1.67	2.50
56	(53-58)	**24**	0.94	1.38	1.00	1.54	1.14	1.77	1.49	2.20
110	(105-116)	**48**	0.47	0.69	0.50	0.77	0.57	0.90	0.75	1.11
125	(117-131)	**52**	0.42	0.62	0.45	0.69	0.51	0.80	0.66	1.00
139	(132-147)	**60**	0.37	0.55	0.40	0.61	0.45	0.70	0.59	0.88
175	(165-185)	**72**	0.30	0.44	0.32	0.49	0.36	0.56	0.47	0.70
200	(186-207)	**80**	0.265	0.39	0.28	0.43	0.32	0.50	0.42	0.62
230	(208-233)	**96**	0.235	0.35	0.25	0.39	0.285	0.44	0.375	0.56
240	(234-261)	**110**	0.21	0.31	0.225	0.35	0.255	0.40	0.335	0.50
290	(262-293)	**117**	0.187	0.28	0.20	0.31	0.23	0.35	0.30	0.44
318	(294-329)	**125**	0.166	0.25	0.178	0.27	0.20	0.31	0.265	0.39
346	(330-369)	**147**	0.148	0.22	0.159	0.24	0.18	0.28	0.235	0.35
400	(370-414)	**167**	0.132	0.20	0.142	0.22	0.161	0.25	0.21	0.31
440	(415-464)	**185**	0.118	0.17	0.126	0.19	0.143	0.22	0.187	0.28
500	(465-522)	**208**	0.105	0.15	0.113	0.17	0.128	0.20	0.167	0.25
575	(523-585)	**233**	0.094	0.14	0.10	0.15	0.114	0.17	0.149	0.22

Brake			BMG8	BM15	BM30/31 BM32/62
For motor size			112 ... 132S	132M ... 160M	160L ... 225
$M_{B\ max}$ [Nm]			75	150	600
P_B [W]			70	95	120
Inrush current ratio I_B/I_H			6.3	7.5	8.5
Rated voltage U_N			I_H [A_{AC}]	I_H [A_{AC}]	I_H [A_{AC}]
V_{AC}		V_{DC}			
		24	2.77[1)]	4.15[1)]	4.0[1)]
56	(53-58)		1.84	2.65	-
110	(105-116)		0.93	1.32	1.78
125	(117-131)		0.82	1.18	1.60
139	(132-147)		0.73	1.05	1.43
175	(165-185)		0.59	0.84	1.13
200	(186-207)		0.52	0.74	1.00
230	(208-233)		0.46	0.66	0.90
240	(234-261)		0.41	0.59	0.80
290	(262-293)		0.36	0.53	0.71
318	(294-329)		0.33	0.47	0.63
346	(330-369)		0.29	0.42	0.57
400	(370-414)		0.26	0.37	0.50
440	(415-464)		0.24	0.33	0.44
500	(465-522)		0.20	0.30	0.40
575	(523-585)		0.18	0.26	0.36

1) Direct current for operation with BSG

Brake			BMG61	BMG122
For motor size			250M ... 280	250M ... 280
$M_{B\ max}$ [Nm]			600	1200
P_B [W]			195	195
Inrush current ratio I_B/I_H			6	6
Rated voltage U_N			I_H [A_{AC}]	I_H [A_{AC}]
V_{AC}				
208	(194-217)		1.50	1.50
230	(218-243)		1.35	1.35
254	(244-273)		1.20	1.20
290	(274-306)		1.10	1.10
318	(307-343)		1.00	1.00
360	(344-379)		0.85	0.85
400	(380-431)		0.75	0.75
460	(432-484)		0.65	0.65
500	(485-542)		0.60	0.60
575	(543-600)		0.54	0.54

Cross section of brake cable

Select the cross section of the brake cables according to the currents in your application. Remember to take the inrush current of the brake into account when selecting the cross section. When taking the voltage drop into account due to the inrush current, the value must not drop below 90% of the rated voltage.

Wire cross sections of max. 2.5 mm^2 can be connected to the terminals of the brake control systems. Use intermediate terminals if the cross sections of the brake cable are larger than this value. Keep the distance between the intermediate terminal and the brake control system as short as possible.

8.4 Technical data forced cooling fan

VR forced cooling fan

Forced cooling fan type		VR		
For motor size		71 ... 80	90 ... 100	112 ... 132S
Supply voltage	[V_{DC}]	24 ± 10%		
Current consumption	[A_{DC}]	0.46	0.75	0.75
Power consumption	[W]	11	18	18
Air discharge rate	[m^3/h]	170	410	410
Ambient temperature	[°C]	-20 ... +60		
Degree of protection		IP54 / IP55		
Electrical connection		Plug connectors		
Max. cable cross section	[mm^2]	3 × 1		
Connection cable ∅ max		7 mm		

VS forced cooling fan

Forced cooling fan type		VS					
For motor size		71 ... 80		90 ... 100		112M ... 132S	
Supply voltage[1]	[V_{AC}]	220 ... 266 (1~)		220 ... 266 (1~)		220 ... 266 (1~)	
Frequency	[Hz]	50	60	50	60	50	60
Current consumption	[A_{AC}]	0.22 ... 0.35	0.24 ... 0.39	0.27 ... 0.33	0.33 ... 0.40	0.27 ... 0.29	0.35 ... 0.38
Power consumption	[W]	46 ... 78	51 ... 86	59 ... 78	73 ... 97	64 ... 80	78 ... 98
Air discharge rate	[m^3/h]	98	109	265	304	306	355
Ambient temperature	[°C]	-20 ... +60					
Degree of protection		IP54 (optional IP55)					
Electrical connection		Terminal block in terminal box					
Max. cable cross section	[mm^2]	4 × 1.5					
Thread for cable gland		1 × M16×1.5 / 1 × M32×1.5					

1) Other supply voltages upon request.

V forced cooling fan

Forced cooling fan type		V							
For motor size		132M ... 160M		160L ... 180		200 ... 225		250 ... 280	
Supply voltage[1] [V_{AC}]	Δ ⅄	3×220...290 3×380...500	3×230...304 3×380...525	3×200...290 3×346...500	3×200...330 3×346...575	3×200...290 3×346...500	3×200...330 3×346...575	3×200...290 3×346...500	3×200...330 3×346...575
Frequency	[Hz]	50	60	50	60	50	60	50	60
Current consumption [A_{AC}]	Δ ⅄	0.42 ... 0.63 0.24 ... 0.36	0.51 ... 0.54 0.29 ... 0.31	0.53 0.30	0.48 0.28	1.0 0.57	0.9 0.52	1.0 0.57	0.9 0.52
Power consumption	[W]	129 ... 180	180 ... 226	80 ... 170	90 ... 150	130 ... 320	170 ... 310	130 ... 320	170 ... 310
Air discharge rate	[m^3/h]	682	757	483	532	895	985	750	
Ambient temperature	[°C]	-20 ... +60							
Degree of protection		IP55							
Electrical connection		Terminal block in terminal box							
Max. cable cross section [mm^2]		4 × 1.5							
Thread for cable gland		2 × M16 × 1.5							

1) Other supply voltages upon request.

8.5 Technical data for plug connectors

IS integrated plug connector

IS size	1	2
For motors	DR63 ... DT90	DV100 ... DV132S
Number of contacts	12 + 2 × PE	
Contact connection	Screw connection	
Contact type	Blade / bushing	
Max. voltage / (CSA) [V_{AC}]	690 / (600)	
Max. contact rating [A_{eff}]	16	
Degree of protection	Corresponding to motor protection type (IP54, IP55, optionally IP56, IP65, IP66)	
Ambient temperature [°C]	-40 ... +40	

APG.. plug connector

Plug connectors	APG..
For motors	DT71 ... DT90
Basic connector system	Phoenix Contact, PlusCon VC
Number of modules and contacts	2 × 2 + 2 × 6
Max. cable cross section [mm^2]	4 × 4 + 12 × 1.5
Max. contact rating [A_{eff}]	4 × 20 + 12 × 8
Max. voltage [V_{AC}]	4 × 500 + 12 × 250
Contact connection	Screw connection
Contact type	Blade / (socket = from customer)
Degree of protection	Corresponding to motor protection type (IP54, IP55, optionally IP65)
Ambient temperature [°C]	-40 ... +40

Installed plug connectors AS.., AC.., AM.., AB.., AD.., AK..

Technical data AS.., AC..

Plug connectors	ASD..	ACB.., ASB..	ACE.., ASE..
For motors	DR63	DT71 ... DV132S	
Locking of mating connector	Single clamp	Double clamp	Single clamp
Connector viewed from motor end	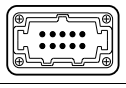		
Basic connector system	1)	Harting, aluminum EMC housing, AC.. = Han 10E, AS.. = Han 10ES	
Number of contacts	10		
Max. contact rating [A_{eff}]	10 × 16		
PE connection	2 contacts on insulator		
Max. voltage / (CSA) [V_{AC}]	500 / (600)		
Contact connection	AC = Crimp contacts AS = Spring cages		
Contact type	Pin / (socket = from customer)		
Degree of protection	Corresponding to motor protection type (IP54, IP55, optionally IP65)		
Ambient temperature [°C]	-40 ... +40		

1) Harting, aluminum standard housing (painted) 10E / 10ES

Technical data AM.., AB.., AD.., AK..

For motors DR63 and DT71 ... DV132S:

Plug connectors	AMD..	AMB..	ABB..	AME..	ABE..
For motors	DR63	DT71 ... DV132S			
Locking of mating connector	Single clamp	Double clamp	Double clamp	Single clamp	Single clamp
Connector viewed from motor end	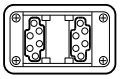	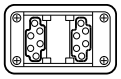	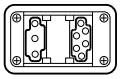	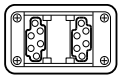	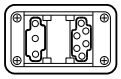
Basic connector system	1)	Harting, EMC aluminum housing Han Modular 10B			
Number of contacts	2 × 6	2 × 6	1 × 3 + 1 × 6	2 × 6	1 × 3 + 1 × 6
Module type[2]	2 × E-module	2 × E-module	1 × C-module + 1 × E-module	2 × E-module	1 × C-module + 1 × E-module
Max. contact rating [A_{eff}]	12 × 16	12 × 16	3 × 25 + 6 × 16	12 × 16	3 × 25 + 6 × 16
PE connection	2 contacts on articulated frame				
Max. voltage / (CSA) [V_{AC}]	500 / (600)				
Contact connection	Crimping contacts				
Contact type	Pin / (socket = from customer)				
Degree of protection	Corresponding to motor protection type (IP54, IP55, optionally IP65)				
Ambient temperature [°C]	-40 ... +40				

1) Harting, standard aluminum housing (painted) Han Modular 10B

2) The module type depends on the current. C-module for more than 16 A, E-module for less than or equal to 16 A.

For motors DV132M ... DV180L:

Plug connectors	ABB..	ADB..	ABE..	ADE..	AKB..	AKE..
For motors	DV132M ... DV180L					
Locking of mating connector	Double clamp	Double clamp	Single clamp	Single clamp	Double clamp	Single clamp
Connector viewed from motor end	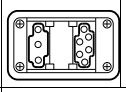	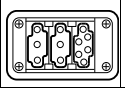	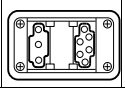	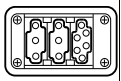	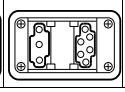	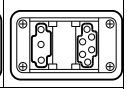
Basic connector system	Harting, gray-cast iron EMC housing Han Modular 10B					
Number of contacts	1×3 + 1×6	2×3 + 1×6	1×3 + 1×6	2×3 + 1×6	1×3 + 1×6	1×3 + 1×6
Module type[1]	1 × C-module + 1 × E-module	2 × C-module + 1 × E-module	1 × C-module + 1 × E-module	2 × C-module + 1 × E-module	1 × C-module + 1 × E-module	1 × C-module + 1 × E-module
Max. contact rating [A_{eff}]	3 × 36 + 6 × 16	6 × 36 + 6 × 16	3 × 36 + 6 × 16	6 × 36 + 6 × 16	3 × 64 + 6 × 16	3 × 64 + 6 × 16
PE connection	2 contacts on articulated frame					
Max. voltage / (CSA) [V_{AC}]	500 / (600)					
Contact connection	Crimping contacts				Axial screw connection	
Contact type	Pin / (socket = from customer)					
Degree of protection	Corresponding to motor protection type (IP54, IP55, optionally IP65)					
Ambient temperature [°C]	-40 ... +40					

1) The module type depends on the current. C-module for more than 16 A, E-module for less than or equal to 16 A.



8.6 Technical data for encoders and encoder mounting adapters

Incremental encoder (Encoder)

Hollow shaft encoder and spreadshaft encoder

Incremental encoder with 1024 pulses/revolution:

Hollow shaft encoders for AC motors DR63		**EH1T**	**EH1S**[1]	**EH1R**
Spreadshaft encoders for AC motors DT71 ... DV100		**ES1T**	**ES1S**[1]	**ES1R**
Spreadshaft encoders for AC motors DV112 ... DV132S		**ES2T**	**ES2S**[1]	**ES2R**
Supply voltage	U_B	5 V_{DC} ±5%	9 V_{DC} ... 26 V_{DC}	
Max. current consumption	I_{in}	180 mA	160 mA	180 mA
Output amplitude per track	U_{high} U_{low}	≥ 2.5 V_{DC} ≤ 0.5 V_{DC}	1 V_{SS}	≥ 2.5 V_{DC} ≤ 0.5 V_{DC}
Signal output		TTL/RS-422	sin/cos	TTL/RS-422
Output current per track	I_{out}	20 mA	40 mA	20 mA
Max. pulse frequency	f_{max}	120 kHz		
Pulses (sine cycles) per revolution	**A, B** **C**	1024 1		
Mark space ratio		1 : 1 ±20%		
Phase angle A : B		90° ±20%		
Vibration resistance (10 Hz ... 2000 Hz)		≤ 100 m/s^2 (EN 60068-2-6)		
Shock resistance		≤ 1000 m/s^2 (EN 60068-2-27)		
Ambient temperature	ϑ_U	-30 °C ... +60 °C (EN 60721-3-3, class 3K3)		
Degree of protection		IP66 (EN 60529)		
Connection		Terminal box on encoder		

1) Recommended encoder for operation with MOVIDRIVE®

Encoder with 1, 2 or 6 pulses/revolution:

Spreadshaft encoders for AC motors DT71 ... DV100		**ES12**	**ES16**
Spreadshaft encoders for AC motors DV112 ... DV132S		**ES22**	**ES26**
Supply voltage	U_B	9 V_{DC} ... 26 V_{DC}	
Max. current consumption	I_{in}	200 mA	
Output amplitude per track	U_{high} U_{low}	≥ U_B - 3.5 V_{DC} ≤ 0.5 V_{DC}	
Signal output		HTL	
Output current per track	I_{out}	60 mA	
Max. pulse frequency	f_{max}		
Pulses/revolution	**A, B**	Either 1 or 2	6
Mark space ratio		1 : 1 ±20%	
Phase angle A : B		90° ±20%	
Vibration resistance (10 Hz ... 2000 Hz)		≤ 100 m/s^2 (EN 60068-2-6)	
Shock resistance		≤ 1000 m/s^2 (EN 60068-2-27)	
Ambient temperature	ϑ_U	-30 °C ... +60 °C (EN 60721-3-3, class 3K3)	
Degree of protection		IP66 (EN 60529)	
Connection		Terminal box on encoder	

Solid shaft encoder **Incremental encoder with 1024 pulses/revolution:**

Solid shaft encoders for AC motors DT71 ... DV280		EV1T	EV1S[1)]	EV1R
Supply voltage	U_B	5 V_{DC} ±5%	10 ... **15** ... **24** ... 30 V_{DC}	
Max. current consumption	I_{in}	180 mA	160 mA	180 mA
Output amplitude per track	U_{high} U_{low}	≥ 2.5 V_{DC} ≤ 0.5 V_{DC}	1 V_{SS}	≥ 2.5 V_{DC} ≤ 0.5 V_{DC}
Signal output		TTL/RS-422	sin/cos	TTL/RS-422
Absolute encoder scanning code		-	-	-
Single turn resolution absolute encoder		-	-	-
Data transmission absolute values		-	-	-
Clock frequency		-	-	-
Output current per track	I_{out}	20 mA	40 mA	20 mA
Max. pulse frequency	f_{max}	120 kHz		
Pulses (sine cycles) per revolution	**A, B** **C**	1024 1		
Mark space ratio		1 : 1 ±20%		
Phase angle A : B		90° ±20%		
Vibration resistance (10 Hz ... 2000 Hz)		≤ 100 m/s^2 (EN 60068-2-6)		
Shock resistance		≤ 1000 m/s^2 (EN 60068-2-27)		
Ambient temperature	ϑ_U	-40 °C ... +60 °C (EN 60721-3-3, class 3K3)		
Degree of protection		IP66 (EN 60529)		
Connection		Terminal box on encoder		

1) Recommended encoder for operation with MOVIDRIVE®

Encoder mounting adapter

Type	ES1A	ES2A	EV1A
For motors	DT/DV71 ... 100	DV112 ... 132S	DT/DV71 ... 280
for	Spreadshaft encoders with 8 mm center bore	Spreadshaft encoders with 10mm center bore	Solid shaft encoders (synchronous flange)
Flange diameter	-	-	58 mm
Center bore diameter	-	-	50 mm
Shaft end diameter	-	-	6 mm
Length of shaft end	-	-	10 mm

Absolute encoder

Absolute encoders for AC motors DT71 ... DV280		AV1Y
Supply voltage	U_B	10 ... **15** ... **24** ... 30 V_{DC} polarity reversal protected
Max. current consumption	I_{in}	250 mA
Cut-off frequency	f_{Grenz}	≥ 100 kHz
Pulses (sine cycles) per revolution	**A, B**	512
Output amplitude per track		1 V_{SS} sin/cos
Scanning code		Gray code
Single-turn resolution		4096 increments/revolution (12 bit)
Multi-turn resolution		4096 revolutions (12 bits)
Data transmission absolute values		synchronous, serial (SSI)
Serial data output		Driver to EIA RS-485
Serial clock input		Optocoupler, recommended driver to EIA RS-485
Clock frequency		Permitted range: 90 ... **300** ... 1100 kHz (max. 100m cable length with 300 kHz)
Clock-pulse space period		12 ... 35 ms
Vibration resistance (10 Hz ... 2000 Hz)		≤ 100 m/s^2 (EN 60068-2-6)
Maximum speed	n_{max}	6000 min^{-1}
Mass	**m**	0.30 kg
Ambient temperature	ϑ_U	-40 °C ... +60 °C (EN 60721-3-3, class 3K3)
Degree of protection		IP66 (EN 60529)
Connection		1 m cable with 17-pin round connector, matching encoder cable with SPUC 17B FRAN female connector

HIPERFACE® encoder

		Single-turn encoder	Multi-turn encoder
HIPERFACE® spreadshaft encoders for AC motors DT71 ... DV100		**ES3H**	**AS3H**
HIPERFACE® spreadshaft encoders for AC motors DV112 ... DV132S		**ES4H**	**AS4H**
HIPERFACE® solid shaft encoders for AC motors DT71 ... DV280		**-**	**AV1H**[1)]
Supply voltage	U_B	7 ... **12** V_{DC} polarity reversal protected	
Max. current consumption	I_{in}	80 mA	
Cut-off frequency	f_{Grenz}	200 kHz	
Pulses (sine cycles) per revolution	**A, B**	1024	
Output amplitude per track		0.9 ... 1.1 V_{SS} sin/cos	
Scanning code		Binary code	
Single-turn resolution		32768 increments/revolution (15 bit)	
Multi-turn resolution		-	4096 revolutions (12 bits)
Data transmission absolute values		asynchronous, serial	
Serial data output		Driver to EIA RS-485	
Available memory in EEPROM (electronic nameplate)		1792 bytes	
Vibration resistance (10 Hz ... 2000 Hz)		≤ 200 m/s^2 (EN 60068-2-6)	
Maximum speed	n_{max}	6000 min^{-1}	
Mass	**m**	0.55 kg	
Ambient temperature	ϑ_U	-20 °C ... +60 °C (EN 60721-3-3, class 3K3)	
Degree of protection		IP66 (EN 60529)	
Connection		1 m cable with 12-pin round connector, matching Hiperface® cable with Intercontec female connector Type ASTA021NN00 10 000 5 000	

1) Recommended encoder for operation with MOVIDRIVE® MDX61B with option DEH11B

Proximity sensor

Proximity sensor for AC motors 71...132S		**NV11**[1)]	**NV12**	**NV16**	**NV21**[1)]	**NV22**	**NV26**
Pulses/revolution		1 A track	2 A track	6 A track	1 A+B tracks	2 A+B tracks	6 A+B tracks
Supply voltage	U_B	10 ... **24** ... 30 V_{DC}					
Max. operating current	I_{max}	200 mA					
Max. pulse frequency	f_{max}	1.5 kHz					
Output		NO contact (pnp)					
Mark space ratio		1 : 1 ±20%					
Phase angle A : B		90° ±45% (typically at 20°C) -					
Ambient temperature	ϑ_U	0 °C ... +60 °C (EN 60721-3-3, class 3K3)					
Degree of protection		IP67 (EN 60529)					
Connection		M12 × 1 connector, e.g. RKWT4 (Lumberg) Not included in the scope of delivery					

1) NV11 and NV21 not permitted for motor sizes 112M and 132S

8.7 Technical data MOVI-SWITCH®

Technical data for MSW-1E and MSW-2S

MOVI-SWITCH®	MSW-1E	MSW-2S
Motor voltage	3 × 380...500 V_{AC}, 50/60 Hz, **Motor winding in ⅄ connection only**.	
Brake voltage	= Motor voltage / $\sqrt{3}$ alternative motor voltage	
Control voltage	24 V_{DC} according to EN 61131-2	
Ambient temperature	-25°C ... +40°C (+60°C)	
Degree of protection	IP65	
Switching function	On/off with star bridge connector One direction of rotation Short-circuit proof solid-state switch according to class B limit to EN 55011 and EN 55014	On/off with switching element Two directions of rotation via reversing relay
Direction of rotation	CW and CCW, depending on the phase sequence	CW and CCW, regardless of the phase sequence
Thermal motor protection	Integrated evaluation of the positive temperature coefficient (PTC) thermistor TF, logically connected with the enable signal.	Integrated evaluation of the positive temperature coefficient (PTC) thermistor TF, logically connected with the enable signal.
Controller	Binary control signals RUN / OK Connection using 1 × M12 plug connector Optional with external AS-interface	Binary control signals CW / CCW / OK Connection using 2 × M12 plug connector Optional with integrated AS-interface
Brake control	Standard with integrated BGW brake control, resulting in shorter brake response time.	Standard with integrated BGW brake control, resulting in shorter brake response time.

8.8 Technical data and dimension sheet for UWU52A

Technical data

Switched-mode power supply	UWU52A
Part number	188 181 7
for forced cooling fan	VR
Input voltage	$1 \times 110 ... 240\ V_{AC}$
Voltage range	$95 ... 265\ V_{AC}$, $110 ... 300\ V_{DC}$
Frequency	50/60 Hz
Max. no-load current	$40\ mA_{AC}$
Rated input current **at $1 \times 110\ V_{AC}$** **at $1 \times 230\ V_{AC}$**	 $1.04\ A_{AC}$ $0.63\ A_{AC}$
Output voltage	$24\ V_{DC}$ (-1% / +3%)
Rated output current **at 40 °C** **at 55 °C**	 $2.5\ A_{DC}$ $2.0\ A_{DC}$
Residual ripple	$< 50\ mV_{eff}$
Interference voltage	$< 120\ mV_{SS}$
Power loss	< 5.5 W
Mass	0.23 kg
Working temperature	0 ... +55 °C (dew not permitted)
Degree of protection	IP20 (EN 60529)
Protection class	I
Connection	Screw terminals for line cross section 0.20 ... 2.5 mm^2

The power supply is short-circuit proof and protected against overload. Input and output are electrically isolated.

Dimension drawing

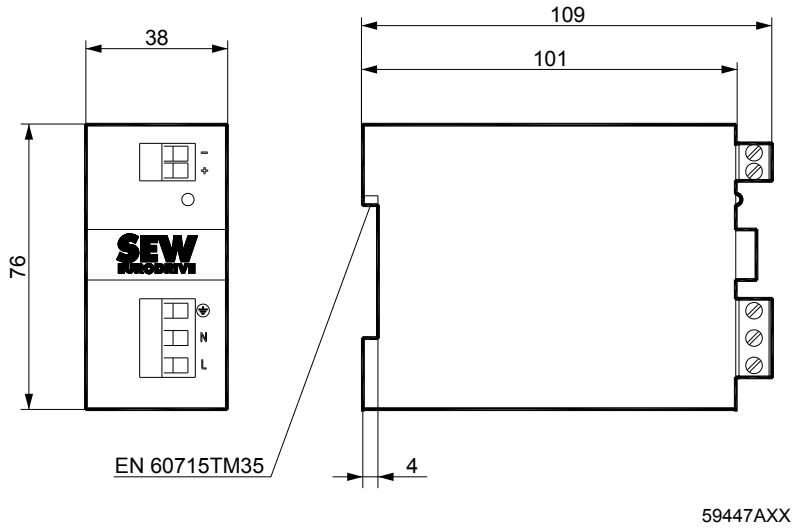

Leave a clearance of at least 50 mm at top and bottom of venting slots.



8.9 Technical data additional flywheel mass Z and backstop RS

Additional flywheel mass Z

For motors	J_{Mot} [10^{-4} kgm^2]	$J_{Mot} + J_Z$ [10^{-4} kgm^2]	J_Z [10^{-4} kgm^2]	External ∅ [mm]	Bore [mm]	Mass [kg]	Part number
DR63S,M4/BR	4.8	12.3	7.5	99	14^{J7}	0.6	185 891 2
DR63L4/BR	5.6	13.1					
DR63S,M6/BR	6.6	14.1					
DR63L6/BR	8.0	15.5					
DT71D4/BMG	5.5	25.5	20	130	15^{J7}	1.3	182 232 2
DT71D6/BMG	9.2	29.2					
DT71D8/2/BMG	5.3	25.3					
DT80K4/BMG	7.5	37.5	30	137	15^{J7}	1.6	182 234 9
DT80N4/BMG	9.6	39.6					
DT80K6/BMG	11.2	41.2					
DT80N6/BMG	15	45.0					
DT80K8/2/BMG	7.5	37.5					
DT80N8/2/BMG	9.6	39.6					
DT90S4/BMG	31	131	100	170	22^{J7}	3.3	182 236 5
DT90L4/BMG	40	140					
SDT90S8/2/BMG	30	130					
SDT90L8/2/BMG	40	140					
DV100M4/BMG	59	194	135	169	22^{J7}	3.2	184 179 3
DV100L4/BMG	71	206					
SDT100LS8/2/BMG	48	183					
SDT100L8/2/BMG	58	193					
DV112M4/BMG	110	290	180	210	32^{H6}	4.6	182 240 3
SDV112M8/2/BMG	110	290					
DV132S4/BMG	158	373	215	210	32^{H6}	5.0	182 242 X
SDV132S8/2/BMG	158	373					
DV132M4/BM	330	830	500	246	40^{H6}	7.6	182 244 6
DV132ML4/BM	380	880					
DV132M6/BM	480	980					
DV132ML6/BM	574	1074					
DV132M8/2/BM	330	830					
DV132ML8/2/BM	380	880					
DV160M4/BM	448	948					
DV160M6/BM	700	1200					
DV160M8/2/BM	448	948					

Backstop RS

Motor type	Rated locking torque [Nm]	Lift-off speed of sprags [rpm]	Ambient temperature
DT71 ... DT80../RS	40	800	-40 °C ... +60 °C
DT90 ... DV100../RS	290	550	
DV112 ... DV132S../RS	290	550	
DV132M ... DV160M../RS	530	630	
DV160L ... DV180L../RS	950	540	
DV200 ... DV225../RS	950	540	
DV250 ... DV280../RS	2600	400	

The RS backstop operates maintenance-free above the lift-off speed. Please consult SEW-EURODRIVE for operation below lift-off speed.

8.10 Dimension sheet information AC motors

Observe the following notes regarding dimension sheets for AC motors (DR/DT/DV):

- The floor dimensions of motors DT/DTE90, DV132ML, DV/DVE180, DV/DVE225 and DV/DVE250 deviate from the IEC dimensions.
- For foot (brake) motors sizes DTE90L and DVE132M, the shaft height corresponds to the IEC standard motor of the next higher power level (100 mm or 160 mm).
- Fan guards of DT71.., DT90.., DV132M and DV160L foot-mounted motors are flat-topped.
- DT56.. motors are only available in combination with R..07 helical gear units or Spiroplan® W..10 gear units.
- Cutouts for cable glands are provided on the terminal box of DT56.. and DR63.. motors.
- The manual brake release is pivoted by 90° together with the terminal box, with the exception of DR63 and the DT71.., DT90.., DV132M and DV160L foot-mounted motors.
- For brake motors do not forget to add the space required for removing the fan guard (= fan guard diameter).
- Leave a clearance of at least half the fan guard diameter to provide unhindered air access.
- DT71.., DT90.., DV132M and DV160L foot-mounted motors with a built-on encoder or forced cooling fan are not available with a flat-topped fan guard and must be supported if necessary.
- Motors from size DV112.. are equipped with lifting eyebolts. The lifting eyebolts can be unscrewed.
- The diameters of the fan guards on the following motors and brake motors are different when solid shaft encoders EV.. and AV.. are installed:
  - DT71 and DT80 d = 150 mm
  - DT90 and DV100 d = 201 mm
  - DV112 and DV132S d = 226 mm
  - DV132M to DV160M d = 285 mm
  - DV160L to DV180 L d = 342 mm
  - DV200 to DV225 d = 394 mm
- The dimensions of MOVI-SWITCH® MSW-1E and MOVI-SWITCH® MSW-2S will be shown in a separate dimension sheet (→ page 628).
- The motors of sizes 200 and 225 have different terminal box dimensions:
  - $I_N \geq 80$ A → gray-cast iron terminal box with M50 × 1.5 adapter piece
  - $I_N \geq 110$ A → gray-cast iron terminal box with M63 × 1.5 adapter piece
- For brakemotors size DT71 and DT80 with VS forced cooling fan, the terminal box for the forced cooling fan is rotated by 90° compared to the motor terminal box.

  Standard: Motor terminal box 0°

  Terminal box of forced cooling fan 270°

8.11 Dimension sheets for AC motors [mm]

08 181 01 02

DT56

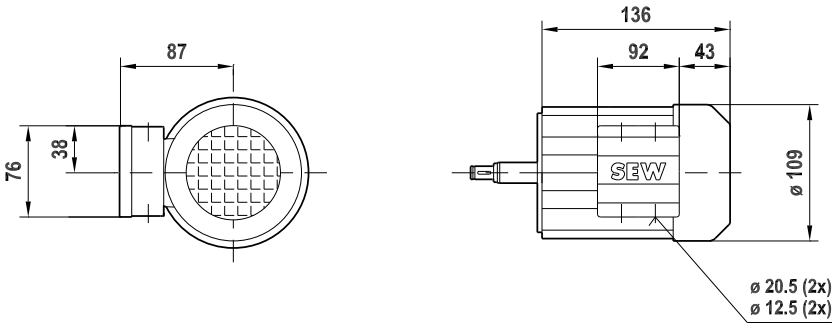

DT56 / B

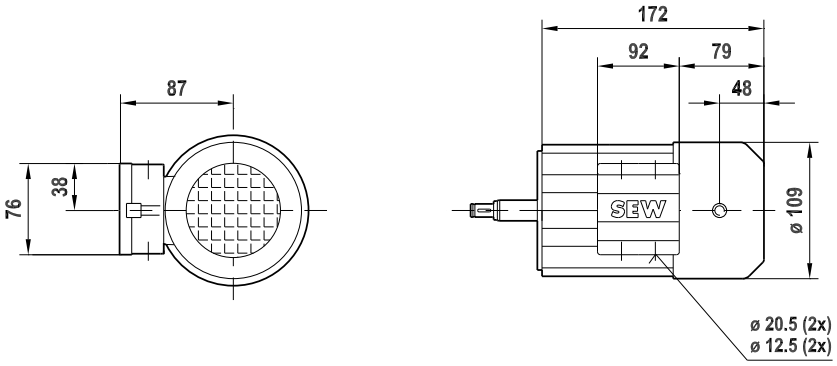

DFR63

08 182 03 02
1 (2)

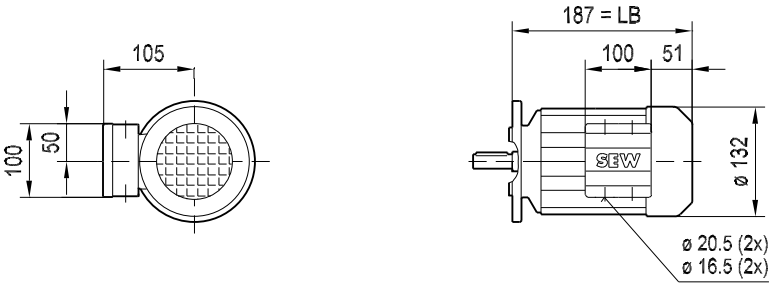

ø 11 k6

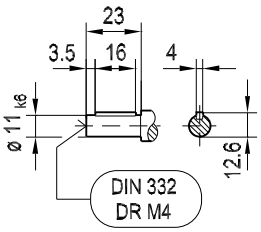

ø 140 IEC (FF115)

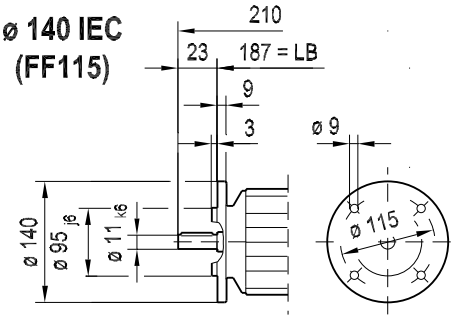

ø 160 (FF130)

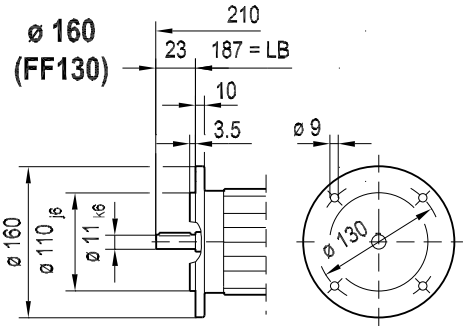

ø 14 k6

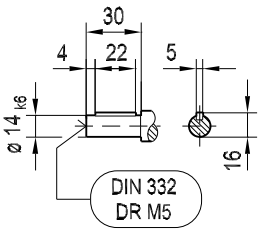

ø 140 (FF115)

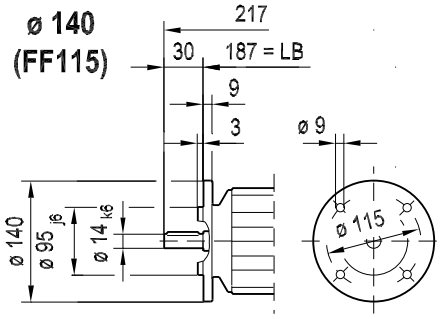

ø 160 (FF130)

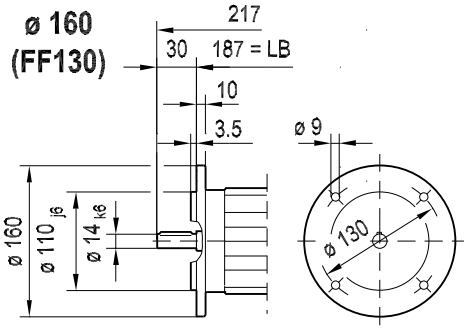

/ C

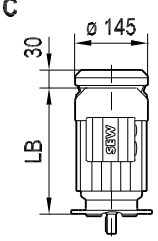

/ 2.WE

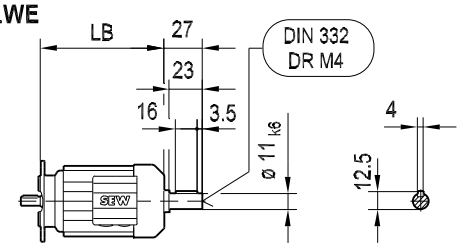

08 182 03 02
2 (2)

D(F)R63

/ IS

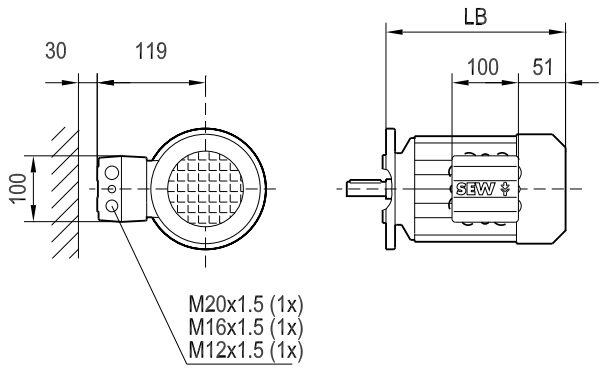

/ ASD.

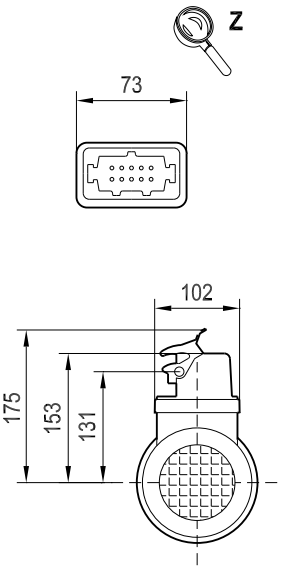

/ AMD.

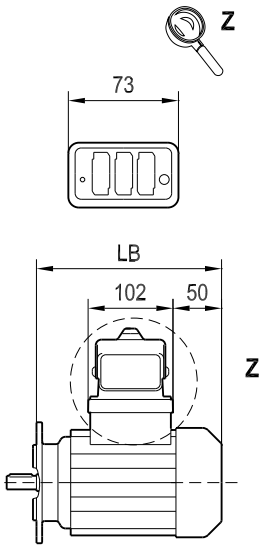

/ EH1

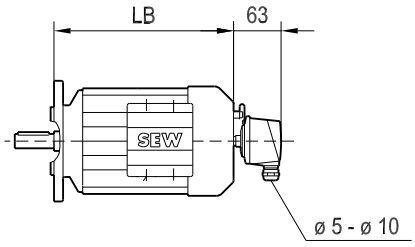

DFR63 / BR03

09 037 02 02
1 (2)

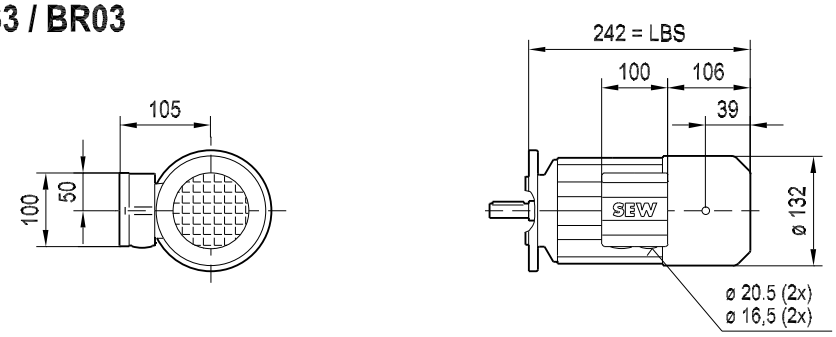

ø 11 k6

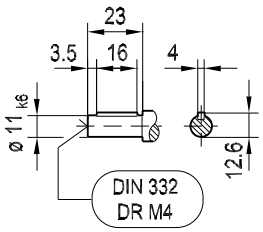

ø 140 IEC (FF115)

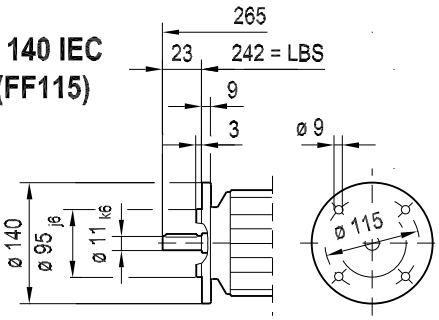

ø 160 (FF130)

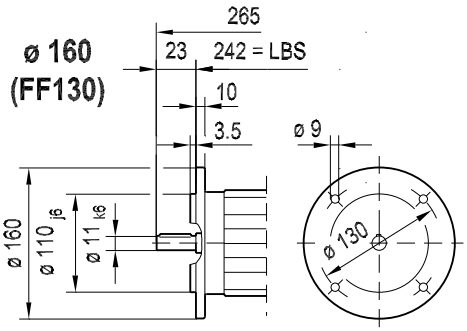

ø 14 k6

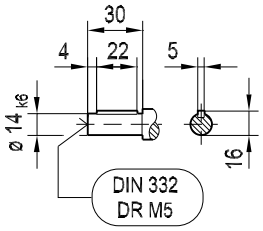

ø 140 (FF115)

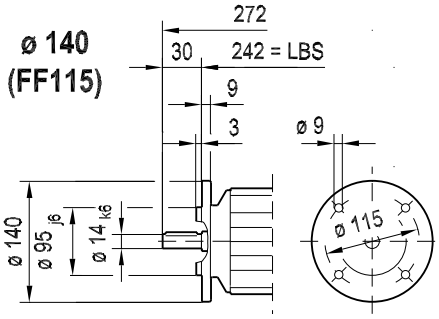

ø 160 (FF130)

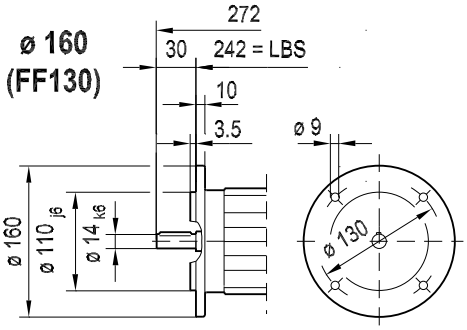

/ C

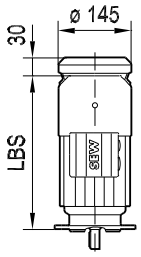

/ 2.WE

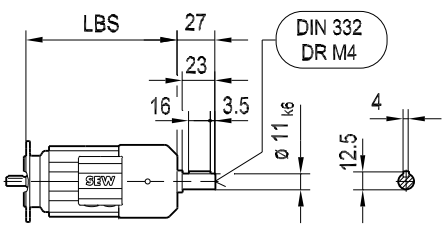

DFR63 / BR03

09 037 02 02
2 (2)

/ IS

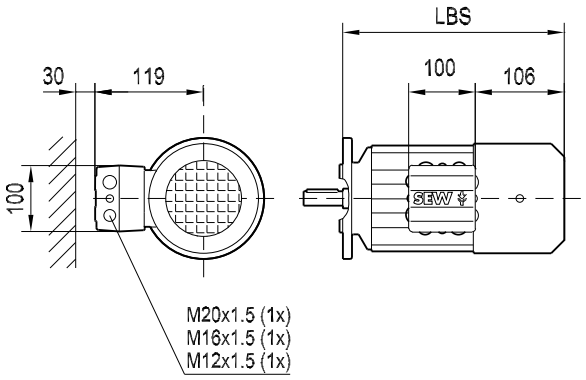

/ ASD.

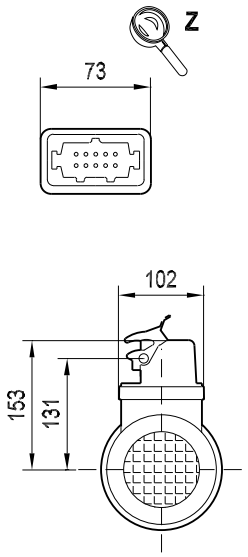

/ AMD.

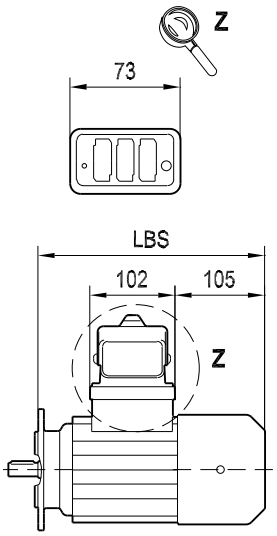

/ EH1

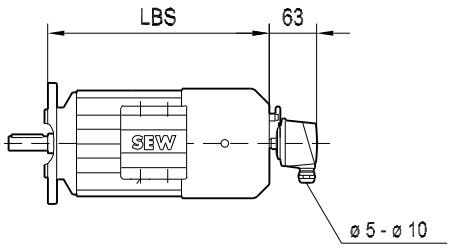

DT71D

08 183 03 02
1 (2)

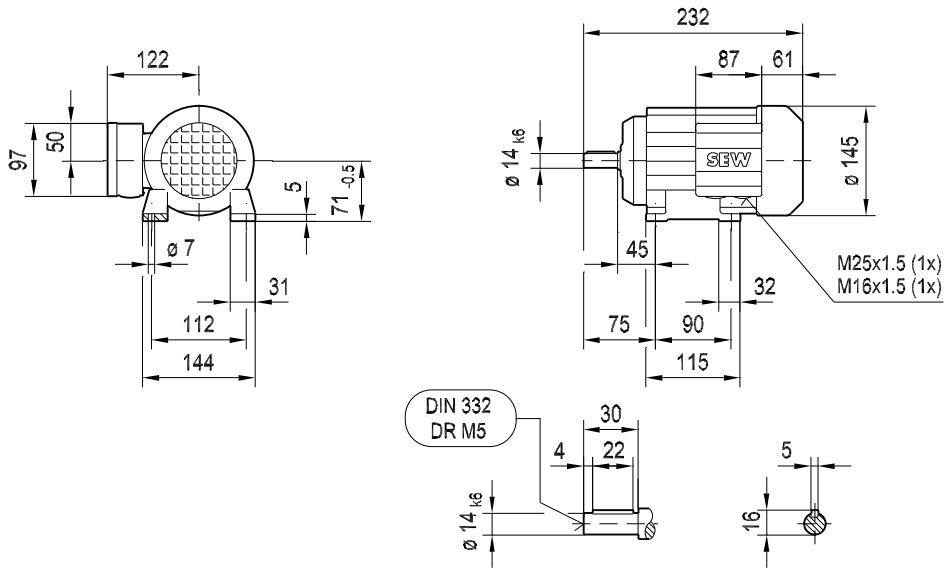

DFT71D

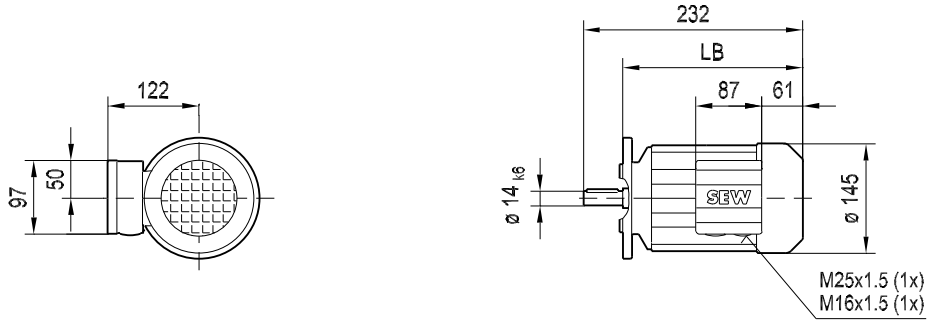

ø 160 IEC (FF130)

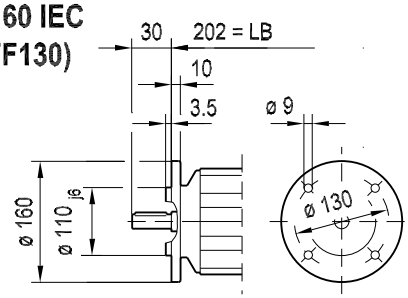

ø 200 (FF165)

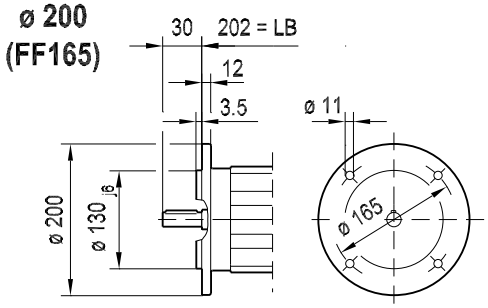

/ C

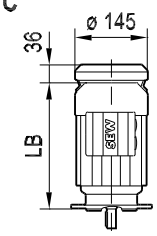

/ 2.WE

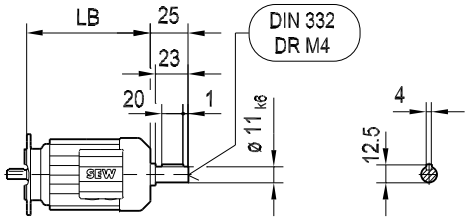

D(F)T71D

08 183 03 02
2 (2)

/ APG.

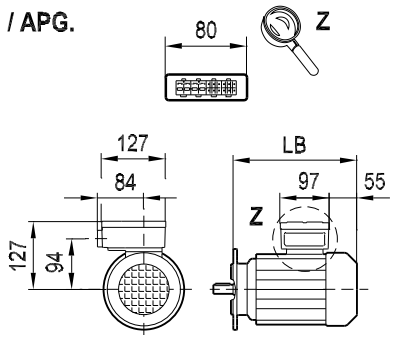

/ A.B.

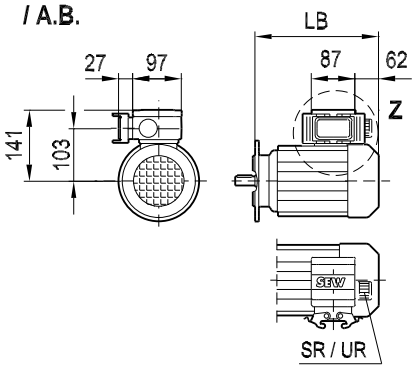

/ A.E.

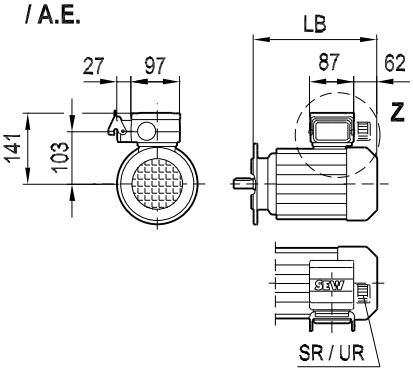

/ NV1. / NV2.

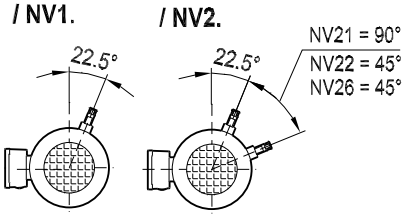

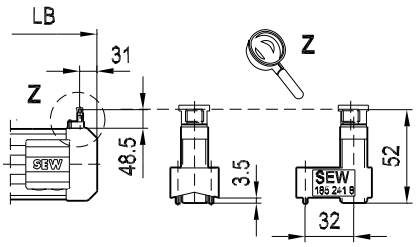

/ ASB. / ASE.
/ ACB. / ACE.

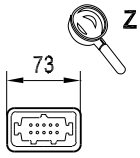

/ AMB. / AME.
/ ABB. / ABE.

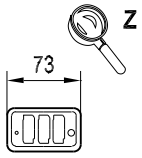

/ ES1. / AS3.

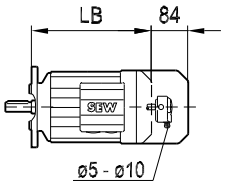

/ ES1A / AS3A

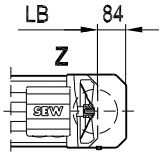

/ ES1A / AS3A / VR

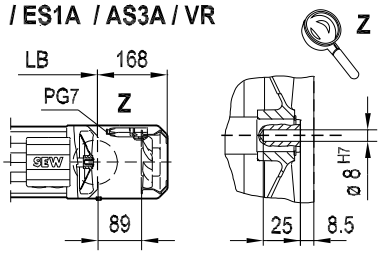

/ IS

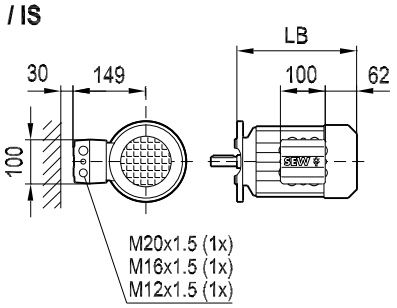

/ EV1A

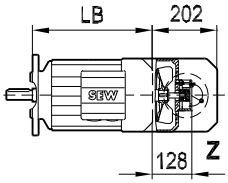

/ EV1.

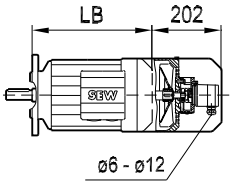

/ AV1.

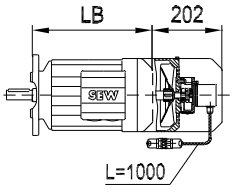

/ VR : X = 64
/ ES1. / AS3. / VR : X = 168
/ EV1. / AV1. / VR : X = 290

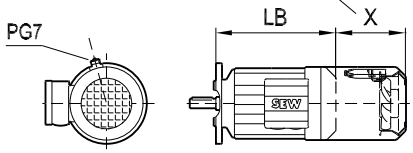

/ EV1A / VR

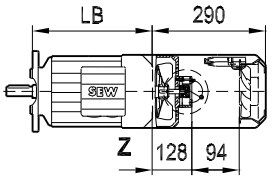

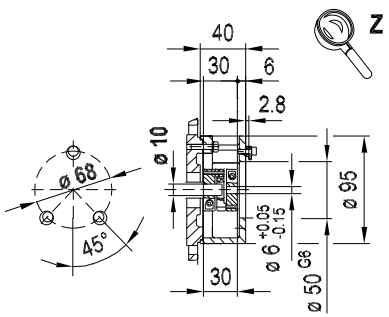

/ EV1A / VS

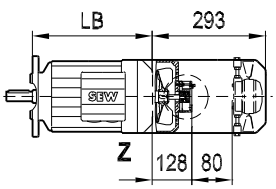

/ VS : X = 115
/ EV1. / AV1. / VS : X = 293

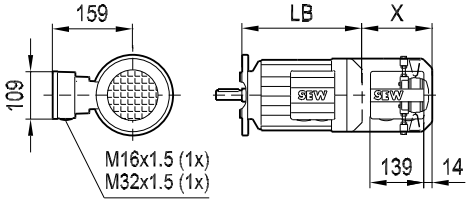

09 038 02 02
1 (2)

DT71.. / BMG
DT71.. / RS

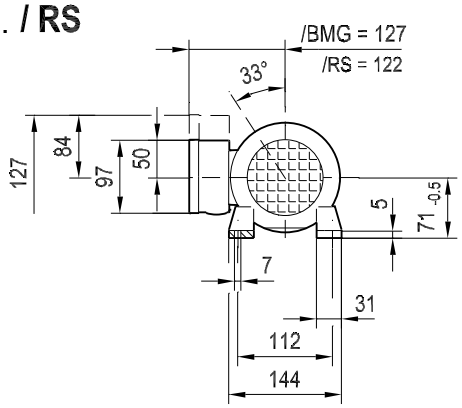

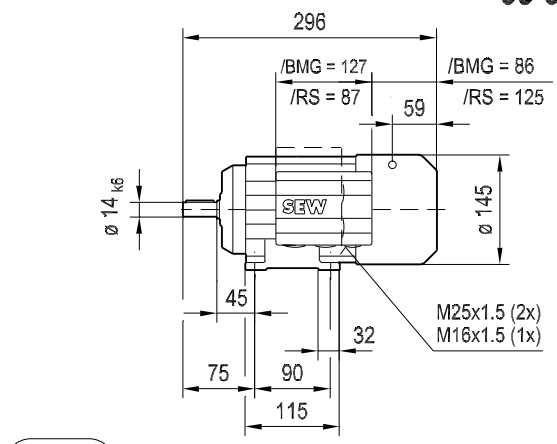

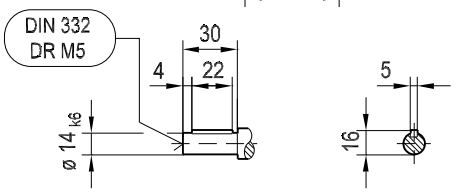

DFT71.. / BMG
DFT71.. / RS

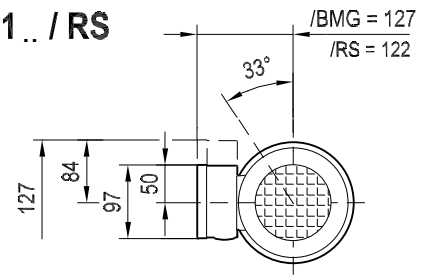

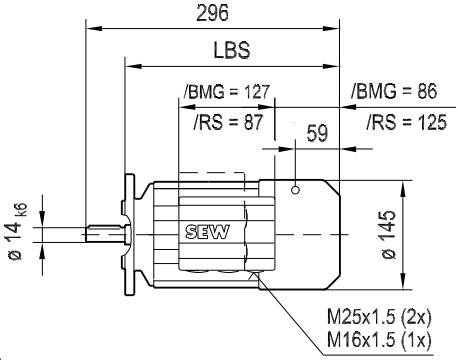

ø 160 IEC (FF130)

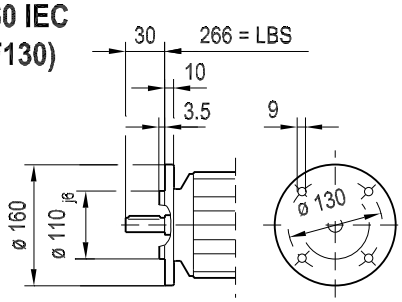

ø 200 (FF165)

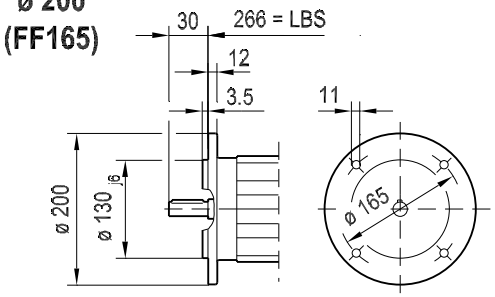

/ C

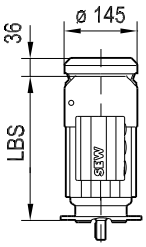

/ 2.WE

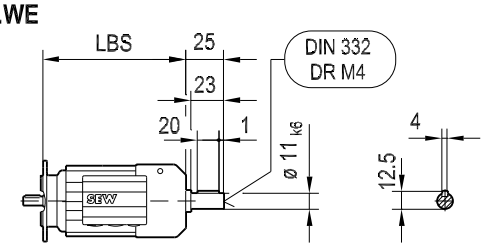

D(F)T71D / BMG

09 038 02 02
2 (2)

/ APG.

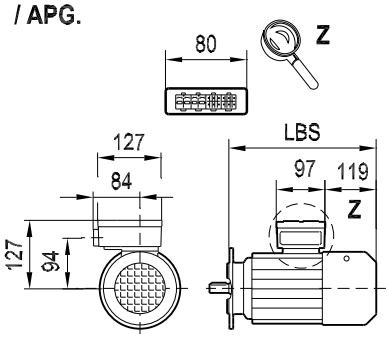

/ A.B.

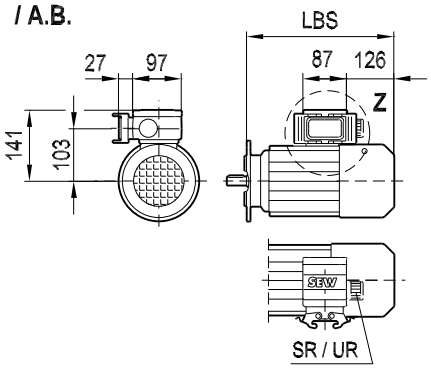

/ A.E.

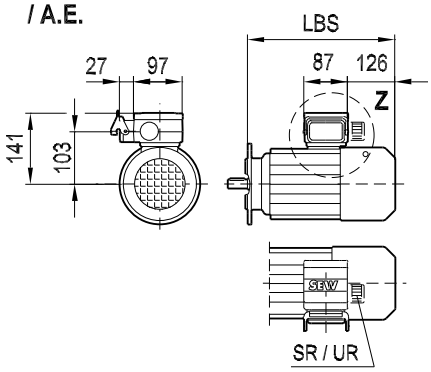

/ NV1.

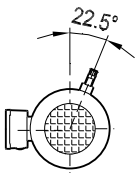

/ NV2.

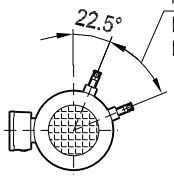

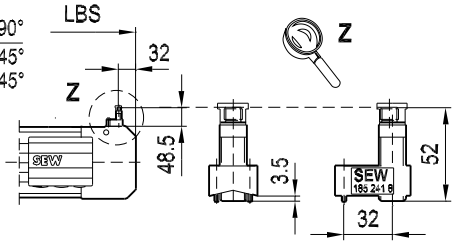

/ ASB. / ASE.
/ ACB. / ACE.

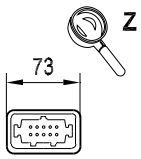

/ AMB. / AME.
/ ABB. / ABE.

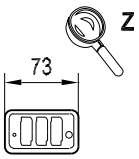

/ ES1. / AS3.

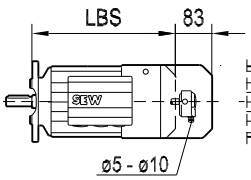

/ ES1A / AS3A

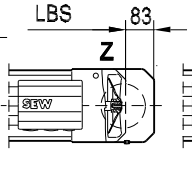

/ ES1A / AS3A / VR

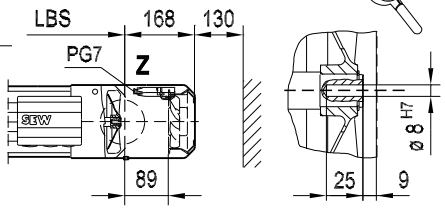

/ IS

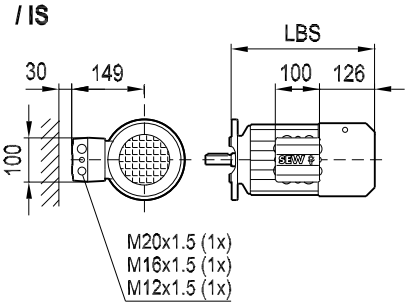

/ EV1A

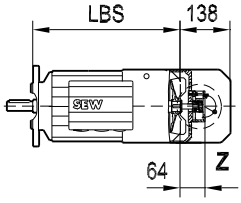

/ EV1.

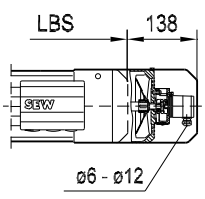

/ AV1.

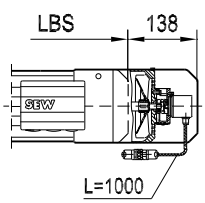

/ VR : X = 84
/ ES1. / AS3. / VR : X = 168
/ EV1. / AV1. / VR : X = 226

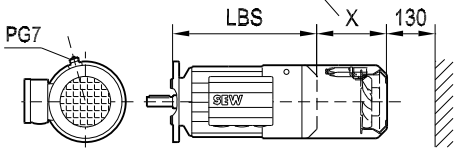

/ EV1A / VR

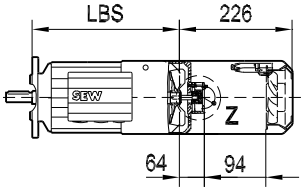

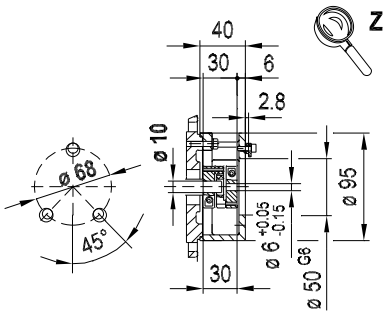

/ EV1A / VS

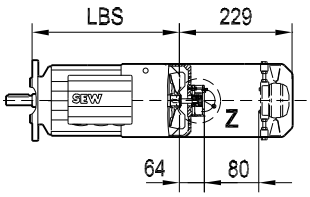

/ VS : X = 90
/ EV1. / AV1. / VS : X = 229

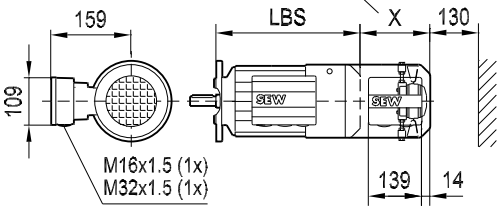

DT80

08 184 03 02
1 (2)

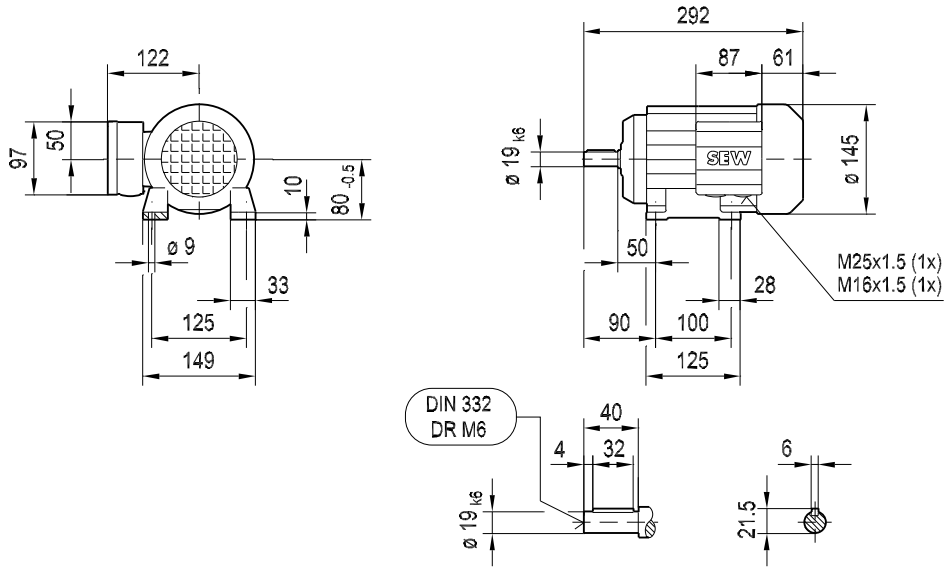

DFT80

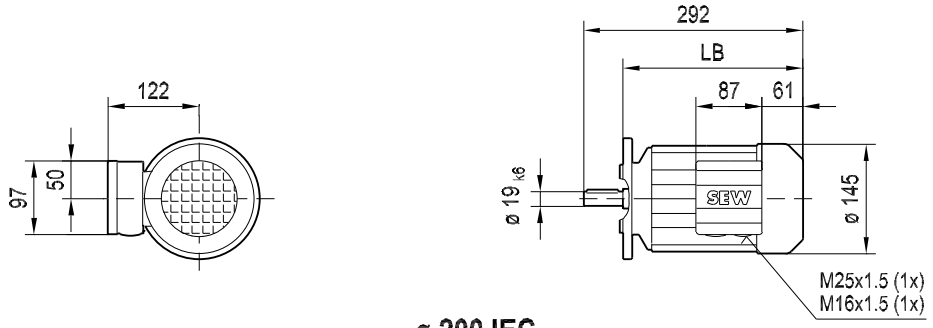

ø 160 (FF130)

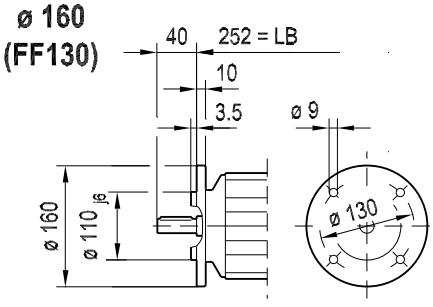

ø 200 IEC (FF165)

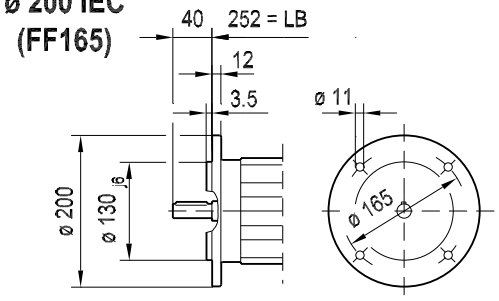

/ C

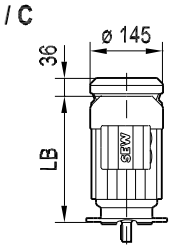

/ 2.WE

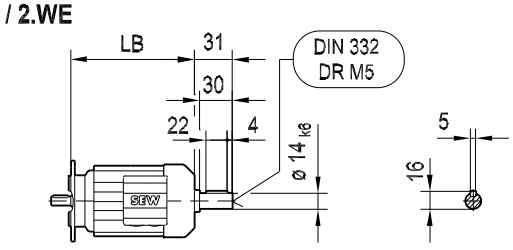

D(F)T80

08 184 03 02
2 (2)

/ APG.

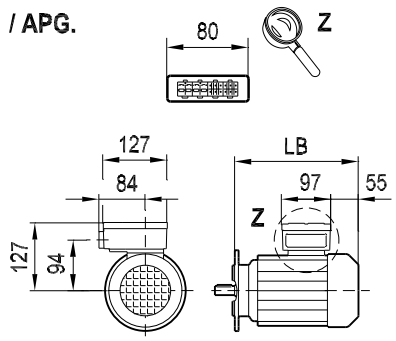

/ A.B.

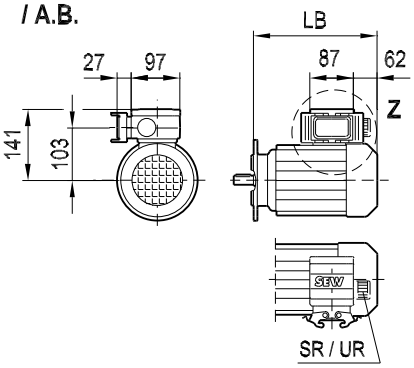

/ A.E.

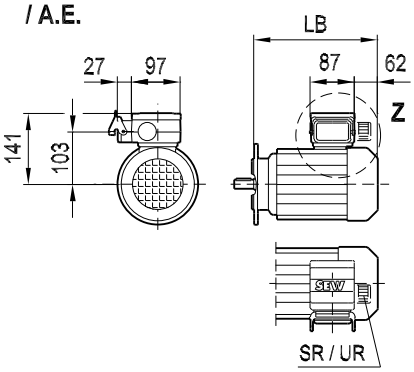

/ NV1.

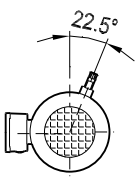

/ NV2.

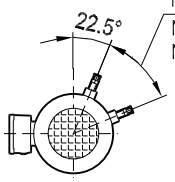

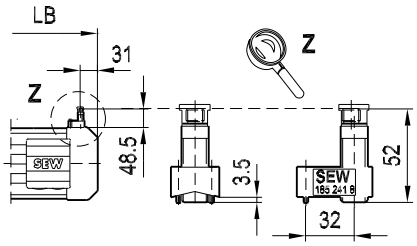

/ ASB. / ASE.
/ ACB. / ACE.

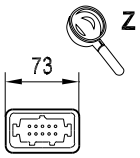

/ AMB. / AME.
/ ABB. / ABE.

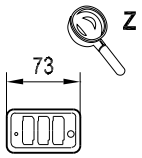

/ ES1. / AS3.

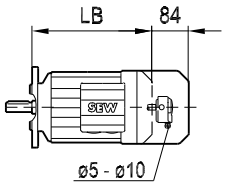

/ ES1A / AS3A

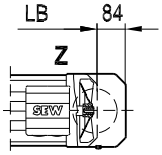

/ ES1A / AS3A / VR

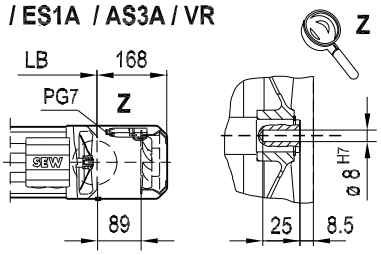

/ IS

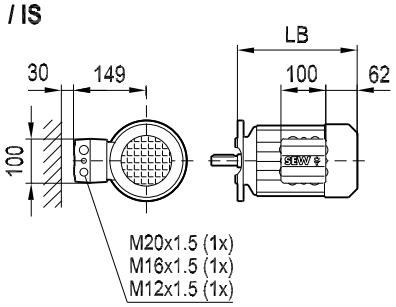

/ EV1A

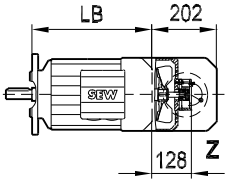

/ EV1.

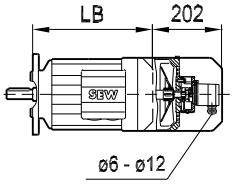

/ AV1.

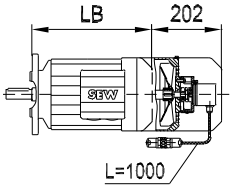

/ VR : X = 64
/ ES1. / AS3. / VR : X = 168
/ EV1. / AV1. / VR : X = 290

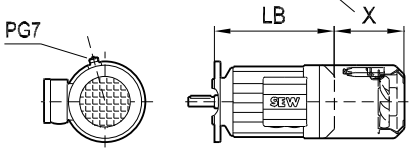

/ EV1A / VR

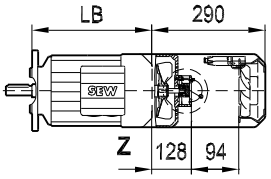

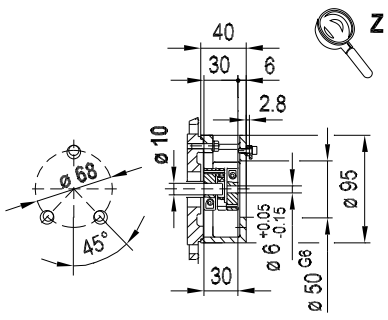

/ EV1A / VS

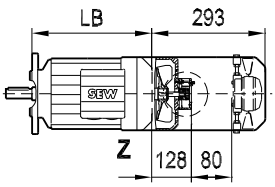

/ VS : X = 115
/ EV1. / AV1. / VS : X = 293

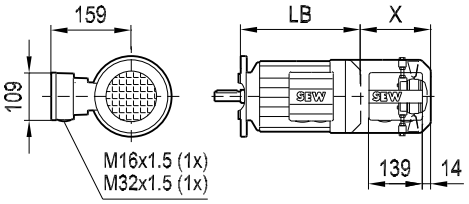

DT80 / BMG
DT80 / RS

09 039 01 02
1 (2)

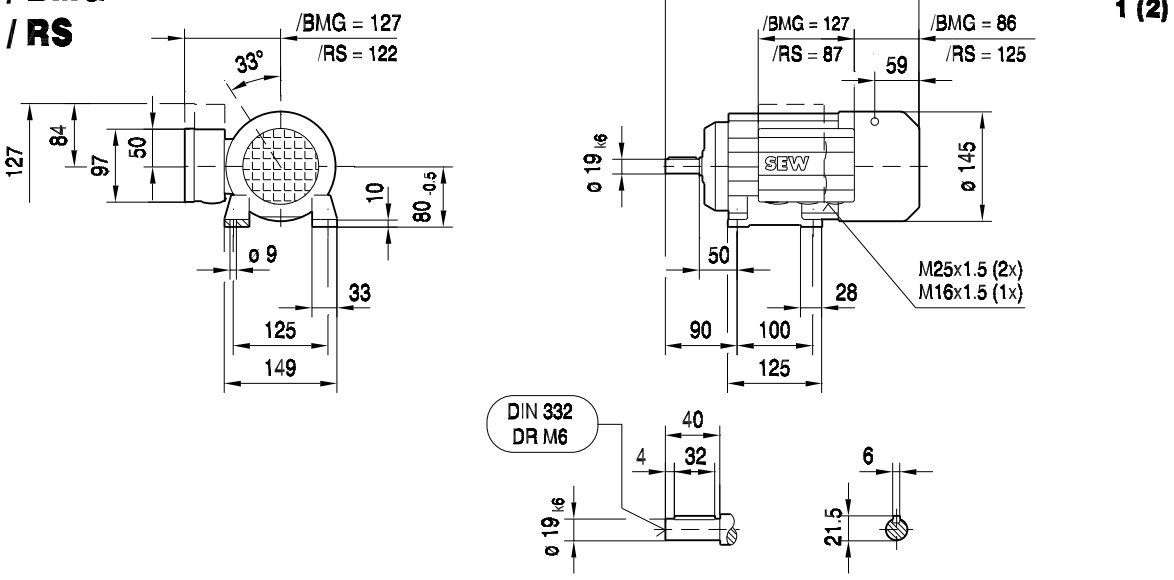

DFT80 / BMG
DFT80 / RS

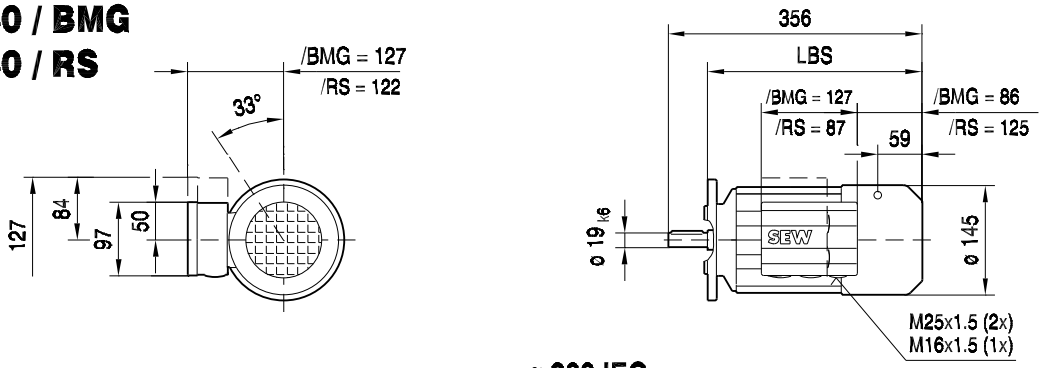

ø 160

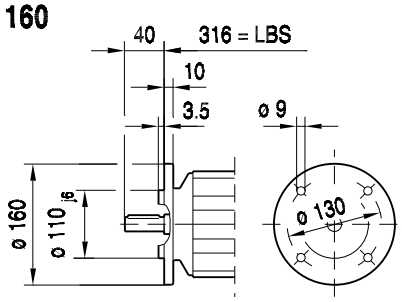

ø 200 IEC

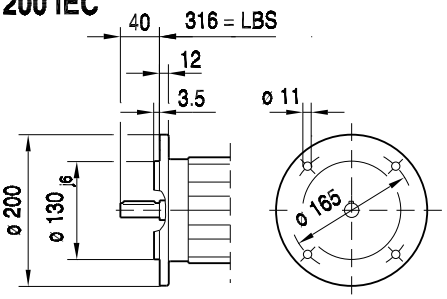

/ C

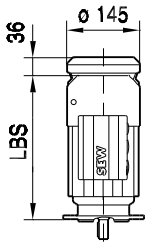

/ 2.WE

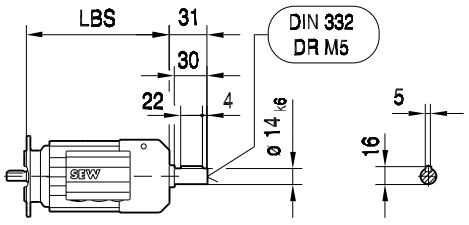

D(F)T80 / BMG

09 039 02 02
2 (2)

/ APG.

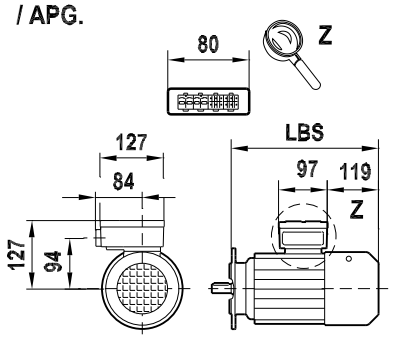

/ A.B.

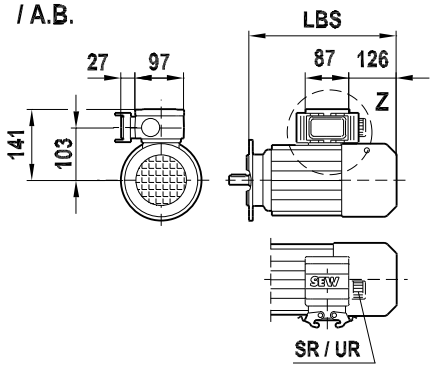

/ A.E.

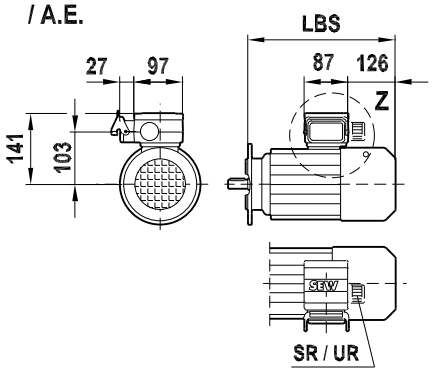

/ NV1.

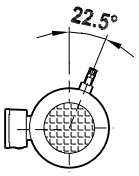

/ NV2.

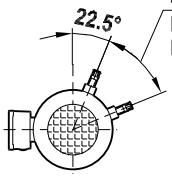

NV21 = 90°
NV22 = 45°
NV26 = 45°

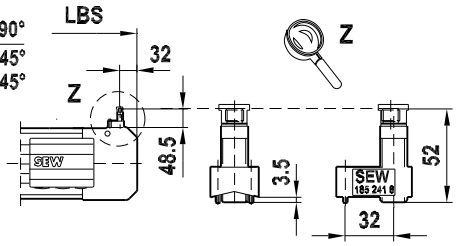

/ ASB. / ASE.
/ ACB. / ACE.

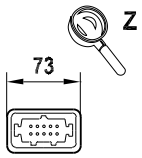

/ AMB. / AME.
/ ABB. / ABE.

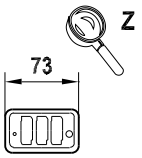

/ ES1. / AS3.

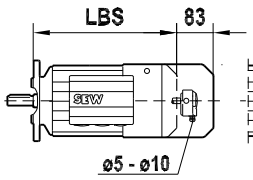

/ ES1A / AS3A

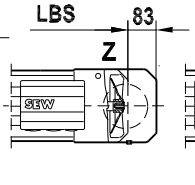

/ ES1A / AS3A / VR

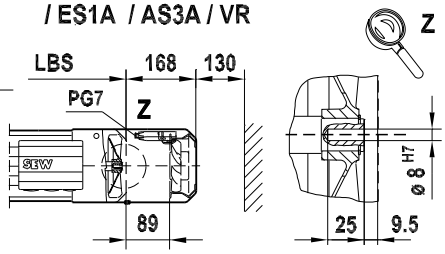

/ IS

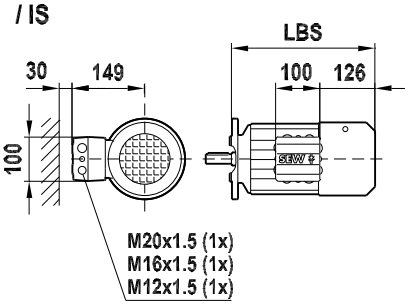

/ EV1A

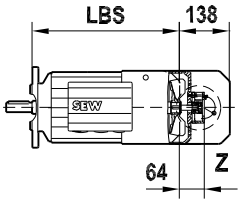

/ EV1.

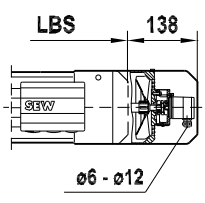

/ AV1.

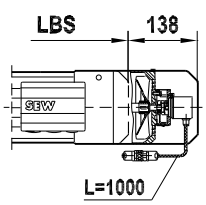

/ VR : X = 84
/ ES1. / AS3. / VR : X = 168
/ EV1. / AV1. / VR : X = 226

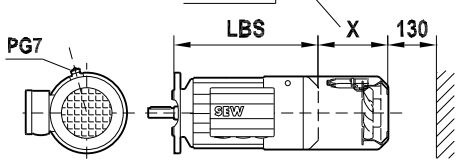

/ EV1A / VR

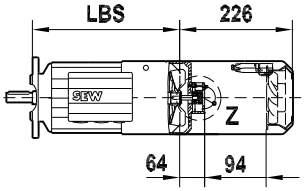

/ EV1A / VS

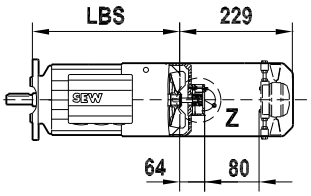

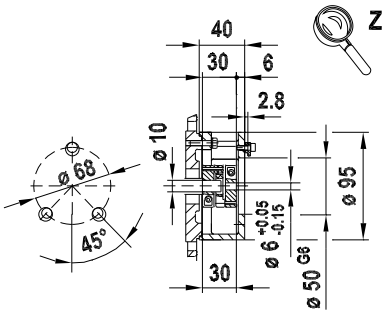

/ VS : X = 90
/ EV1. / AV1. / VS : X = 229

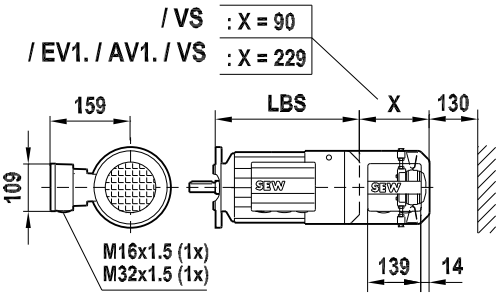

08 185 02 02
1 (2)

DT90S,L
DTE90C,K,S

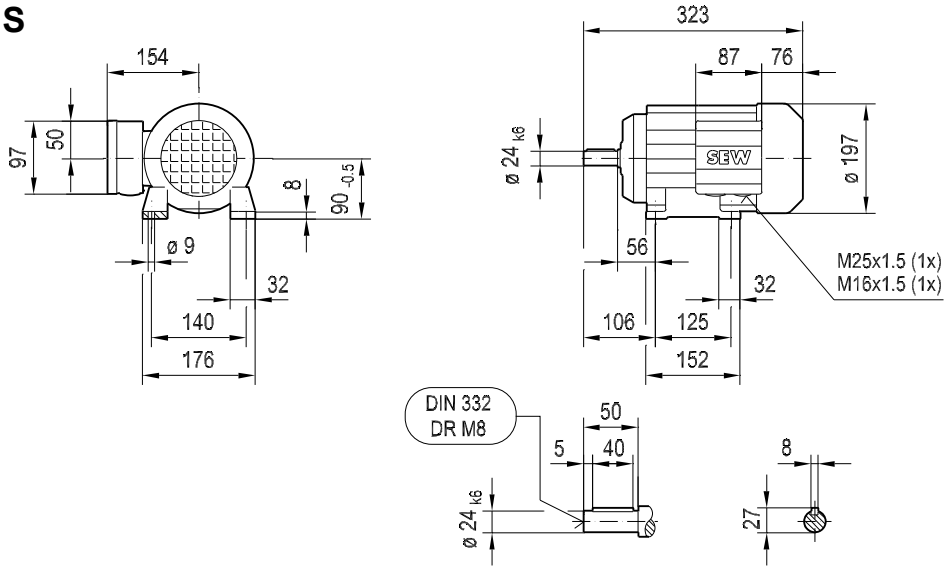

DFT90S,L
DFTE90C,K,S

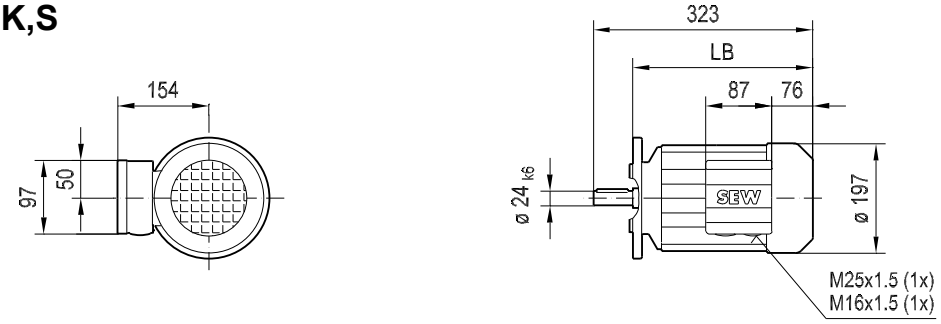

ø 200 IEC (FF165)

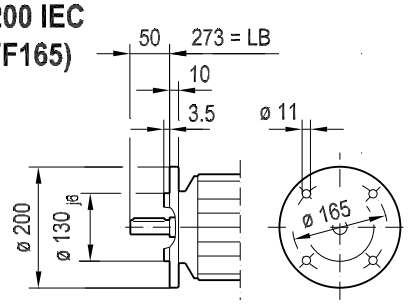

ø 250 (FF215)

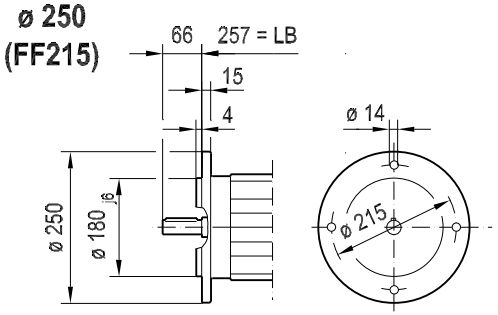

/ C

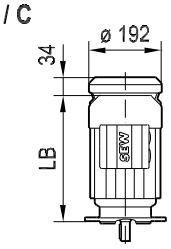

/ 2.WE

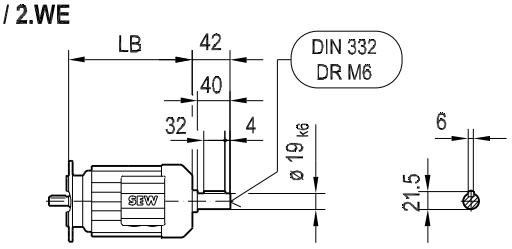

D(F)T90S,L
D(F)TE90C,K,S

08 185 02 02
2 (2)

/ APG.

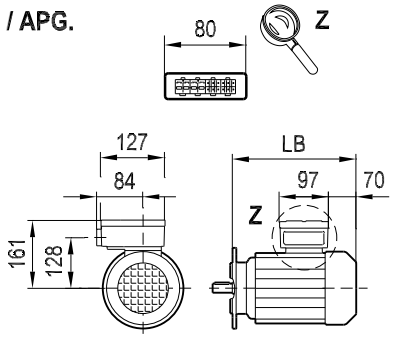

/ A.B.

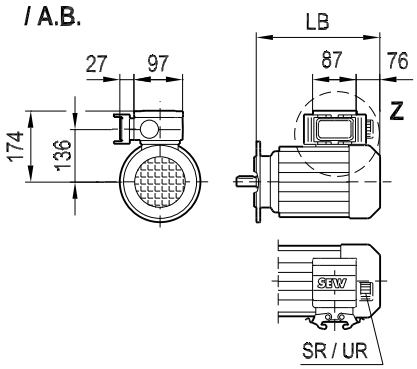

/ A.E.

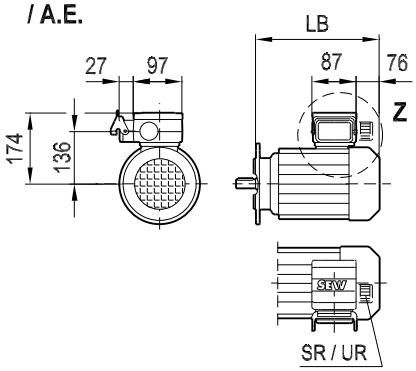

/ NV1. / NV2.

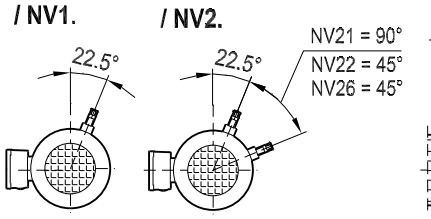

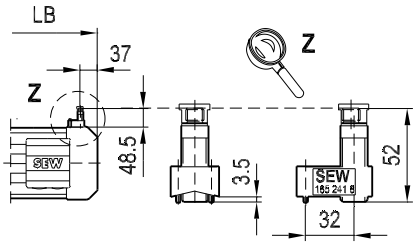

/ ASB. / ASE.
/ ACB. / ACE.

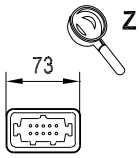

/ AMB. / AME.
/ ABB. / ABE.

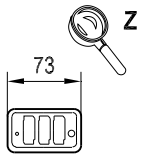

/ ES1. / AS3.

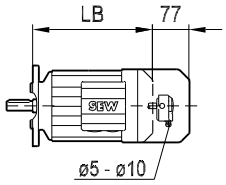

/ ES1A / AS3A

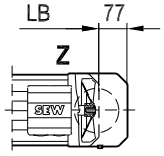

/ ES1A / AS3A / VR

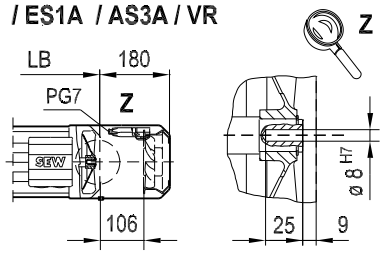

/ IS

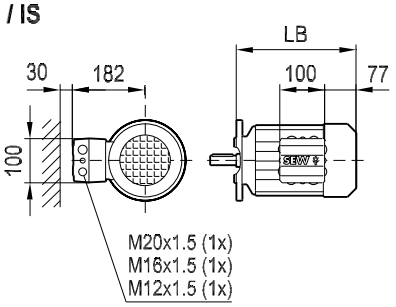

/ EV1A

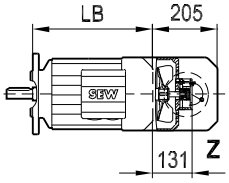

/ EV1.

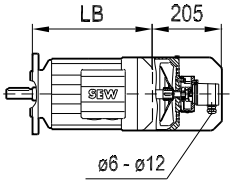

/ AV1.

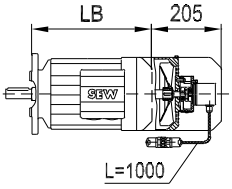

/ VR : X = 85
/ ES1. / AS3. / VR : X = 180
/ EV1. / AV1. / VR : X = 307

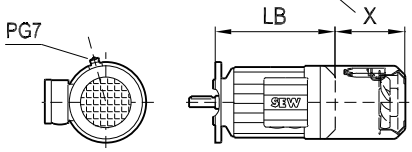

/ EV1A / VR

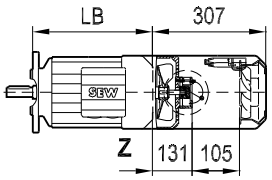

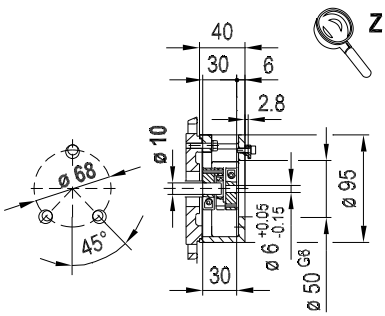

/ EV1A / VS

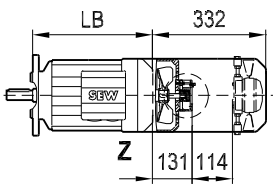

/ VS : X = 99
/ EV1. / AV1. / VS : X = 332

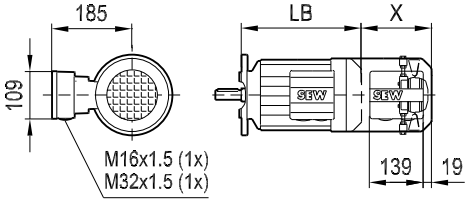

09 040 02 02
1 (2)

DT90S,L / BMG / RS
DTE90C,K,S / BMG / RS

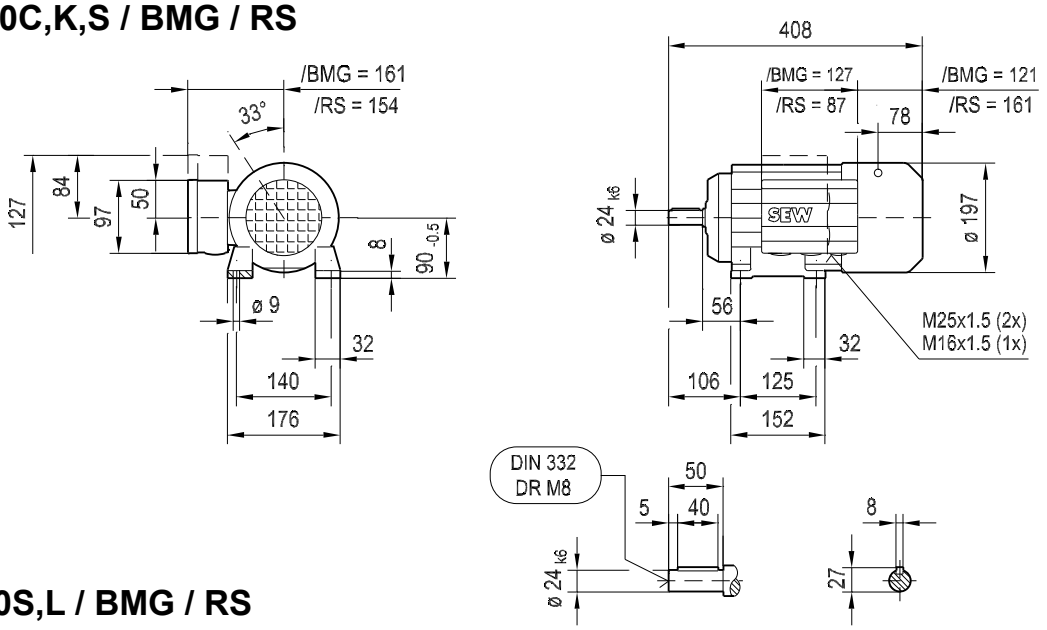

DFT90S,L / BMG / RS
DFTE90C,K,S / BMG / RS

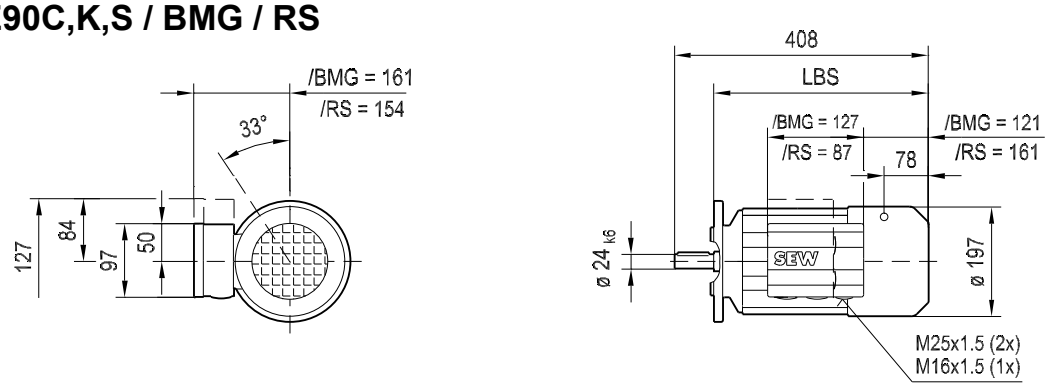

ø 200 IEC (FF165)

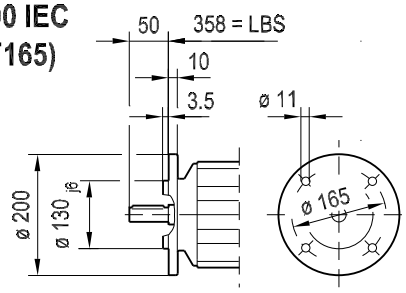

ø 250 (FF215)

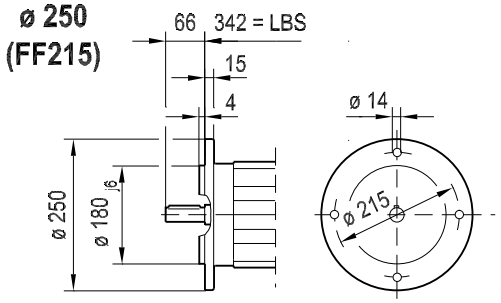

/ C

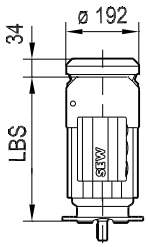

/ 2.WE

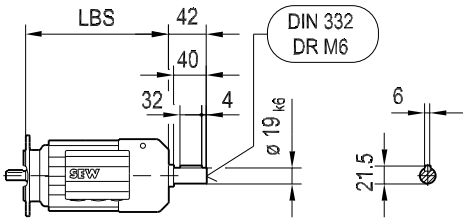

D(F)T90S,L / BMG
D(F)TE90K,S / BMG

09 040 02 02
2 (2)

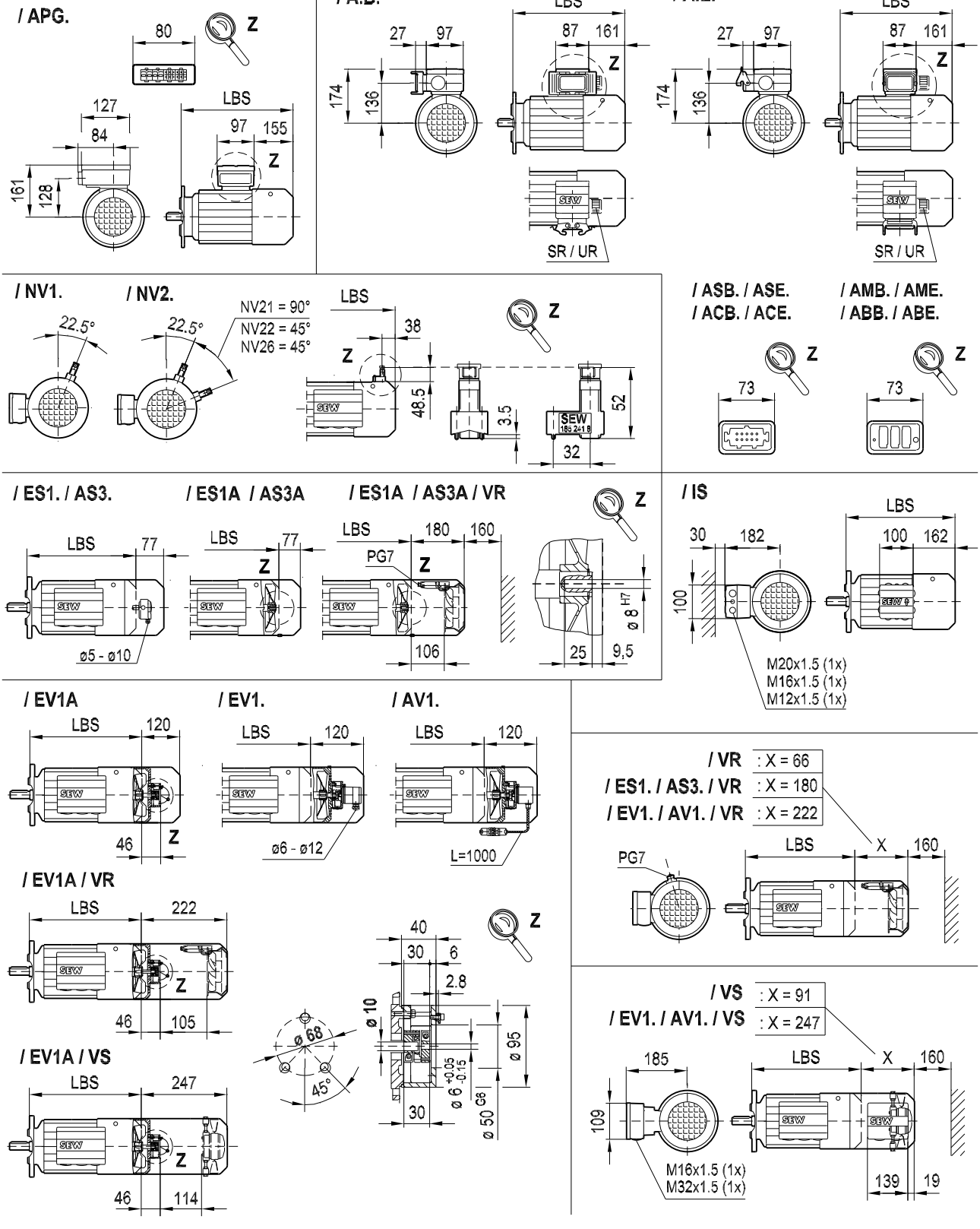

DTE90L

08 224 02 02
1 (2)

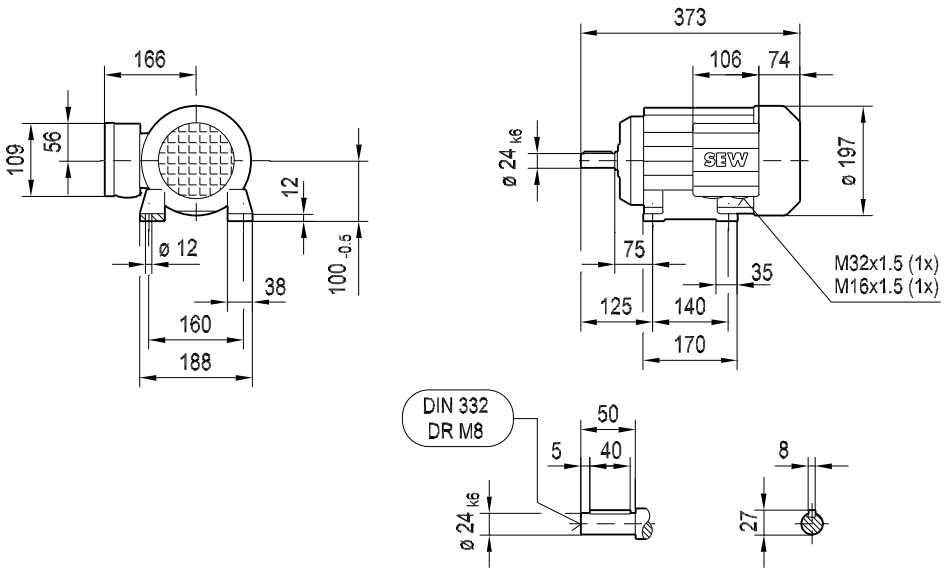

DFTE90L

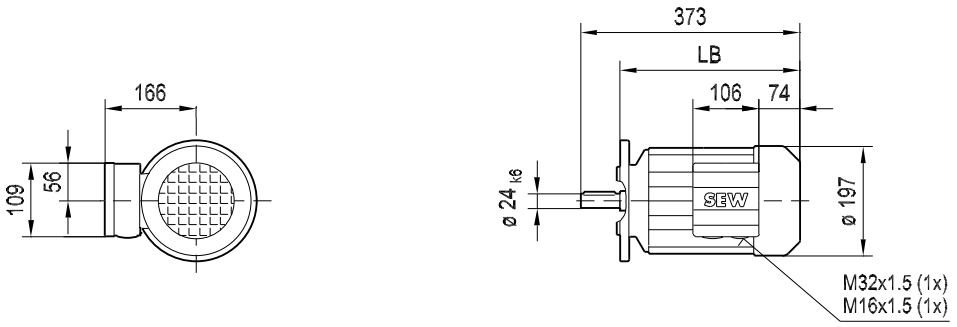

ø 200 IEC (FF165)

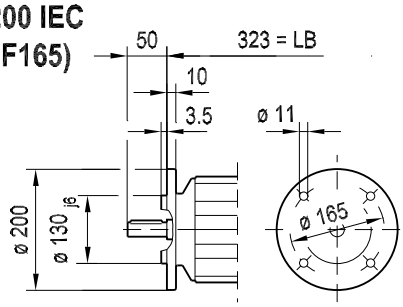

ø 250 (FF215)

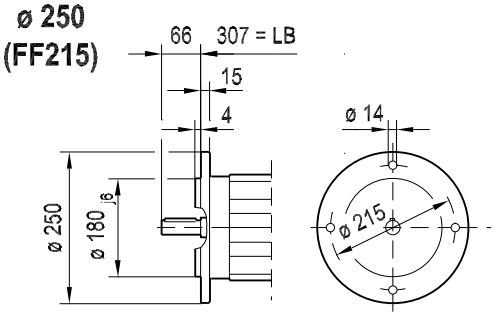

/ C

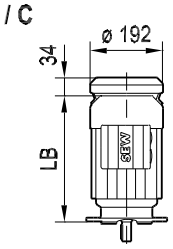

/ 2.WE

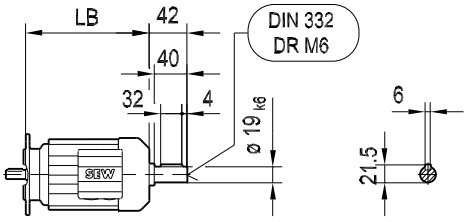

D(F)TE90L

08 224 02 02
2 (2)

/ ASB. / ASE.
/ ACB. / ACE.

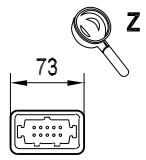

/ AMB. / AME.
/ ABB. / ABE.

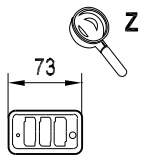

/ A.B.

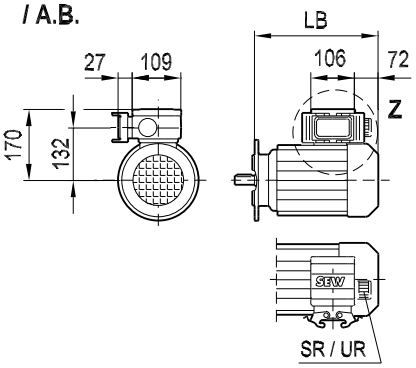

/ A.E.

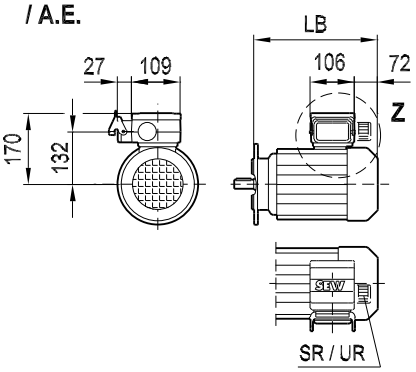

/ NV1.
/ NV2.

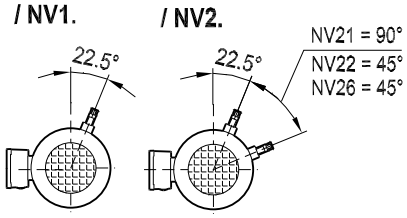

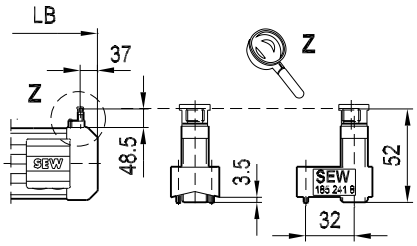

/ IS

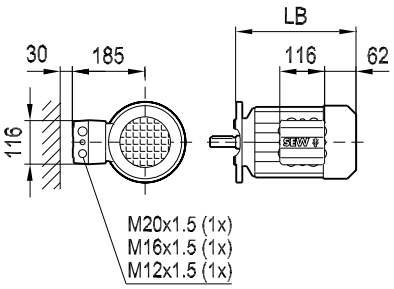

/ ES1. / AS3.

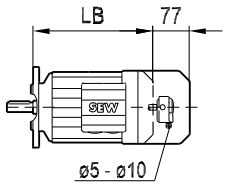

/ ES1A / AS3A

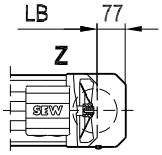

/ ES1A / AS3A / VR

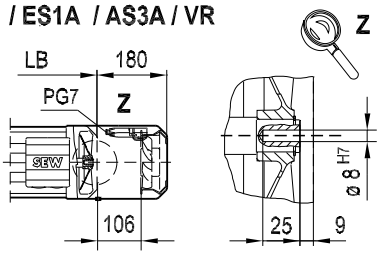

/ EV1A

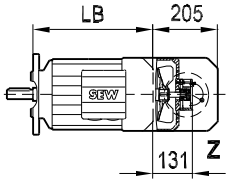

/ EV1.

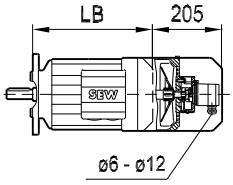

/ AV1.

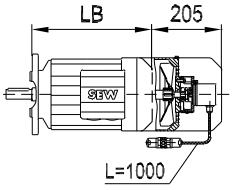

/ VR : X = 85
/ ES1. / AS3. / VR : X = 180
/ EV1. / AV1. / VR : X = 307

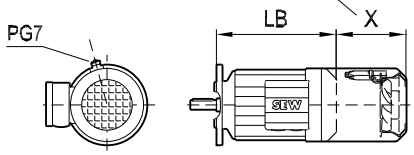

/ EV1A / VR

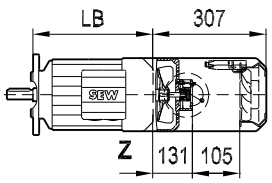

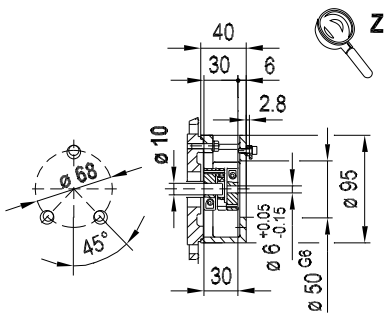

/ EV1A / VS

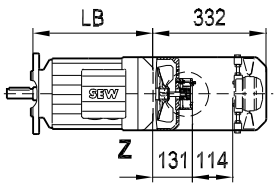

/ VS : X = 99
/ EV1. / AV1. / VS : X = 332

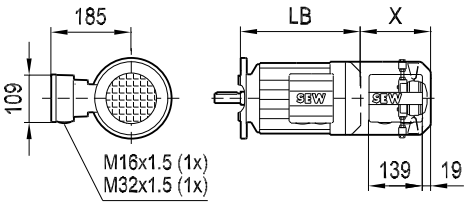

09 071 02 02
1 (2)

DTE90L / BMG
DTE90L / RS

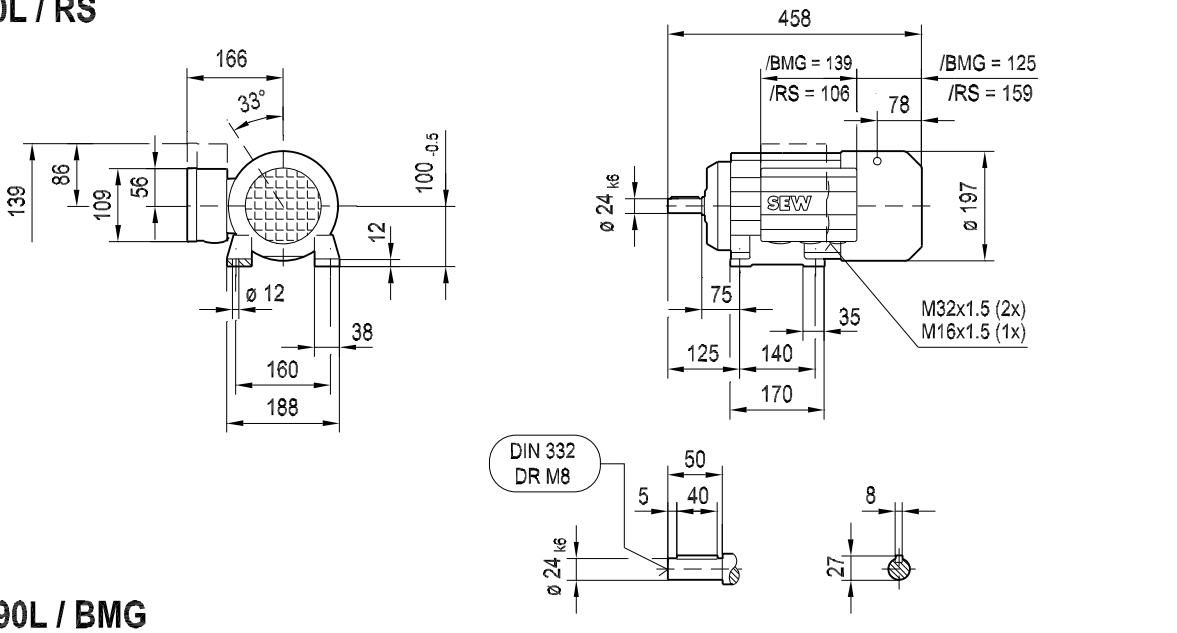

DFTE90L / BMG
DFTE90L / RS

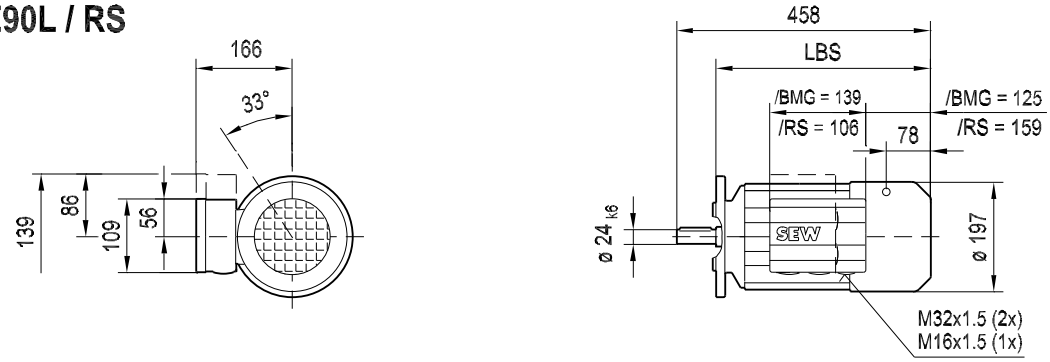

ø 200 IEC (FF165)

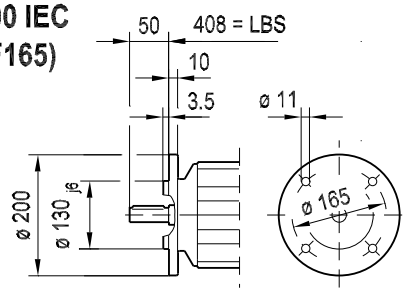

ø 250 (FF215)

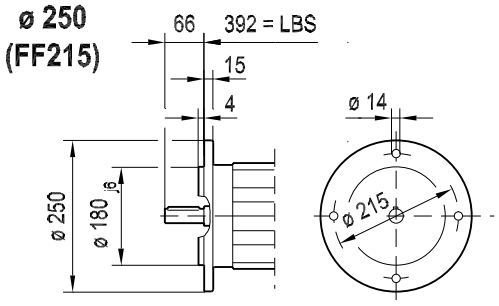

/ C

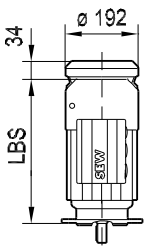

/ 2.WE

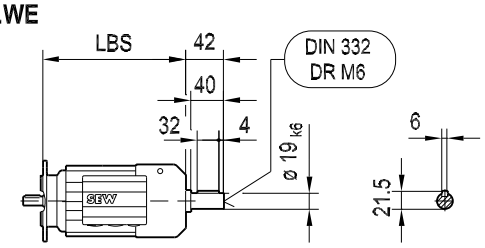

D(F)TE90L / BMG / RS

09 071 02 02
2 (2)

/ ASB. / ASE.
/ ACB. / ACE.

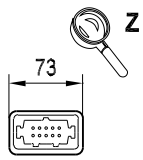

/ AMB. / AME.
/ ABB. / ABE.

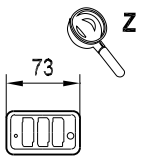

/ A.B.

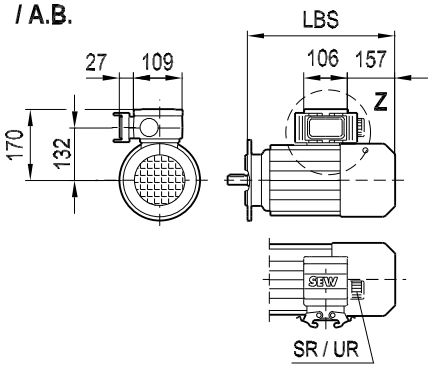

/ A.E.

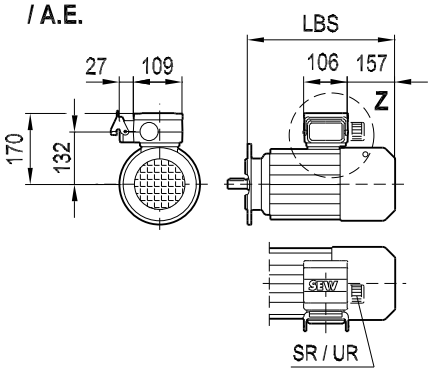

/ NV1.
/ NV2.

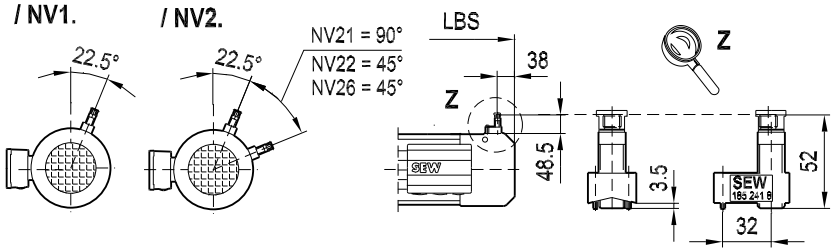

/ IS

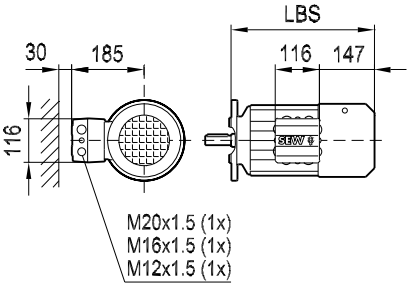

/ ES1. / AS3.

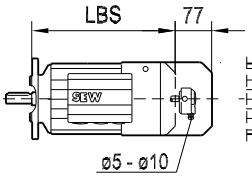

/ ES1A / AS3A

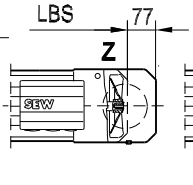

/ ES1A / AS3A / VR

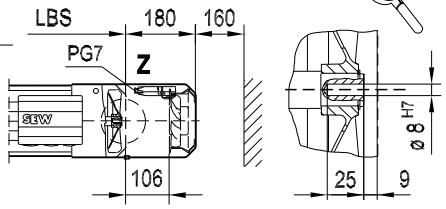

/ EV1A

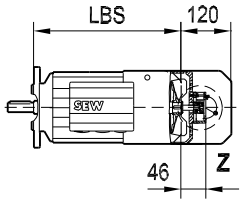

/ EV1.

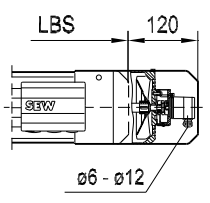

/ AV1.

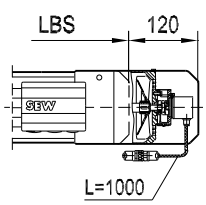

/ EV1A / VR

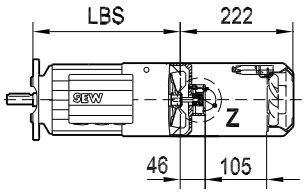

/ EV1A / VS

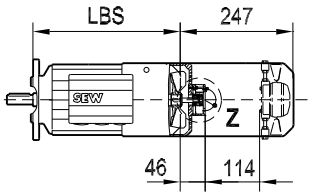

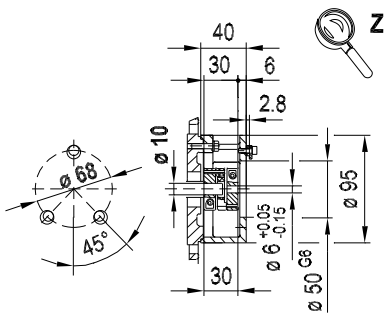

/ VR : X = 66
/ ES1. / AS3. / VR : X = 180
/ EV1. / AV1. / VR : X = 222

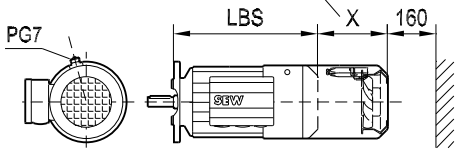

/ VS : X = 91
/ EV1. / AV1. / VS : X = 247

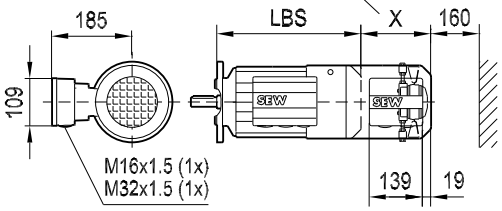

DV/DVE100

SDT100 = DV100M

08 186 02 02

1 (2)

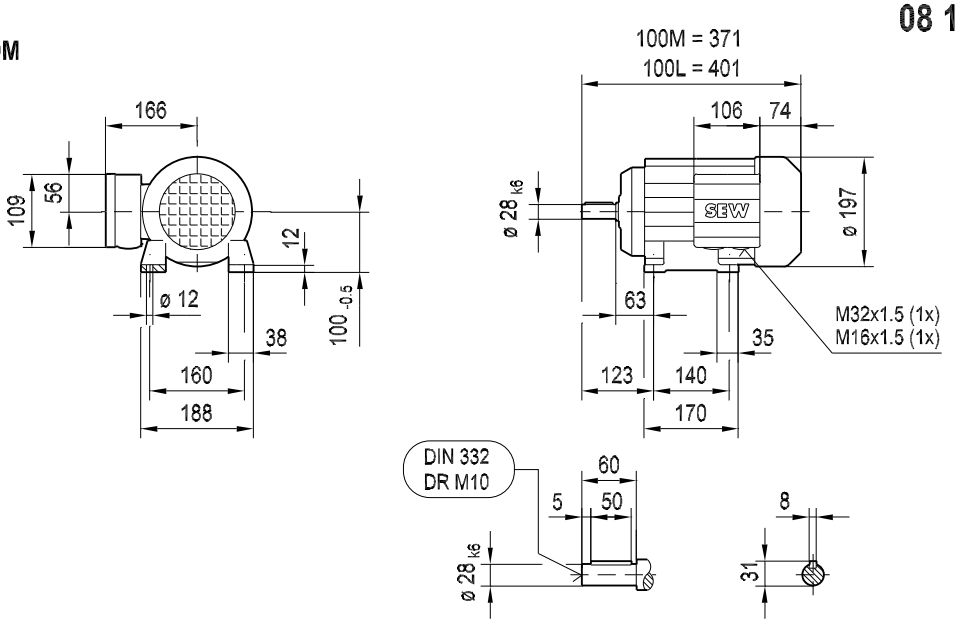

DFV/DFVE100

SDFT100 = DFV100M

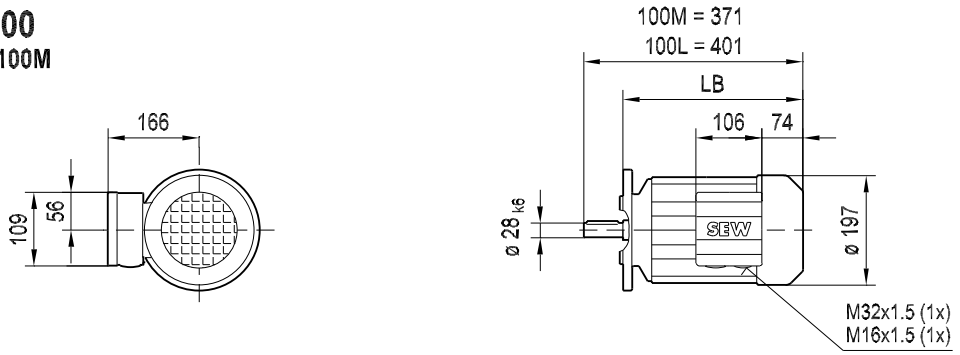

ø 200 (FF165)

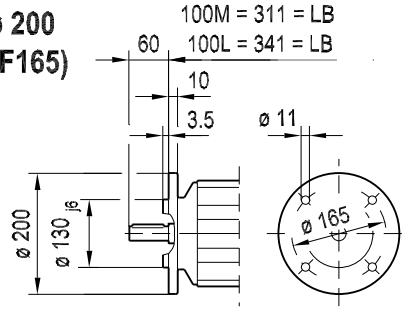

ø 250 IEC (FF215)

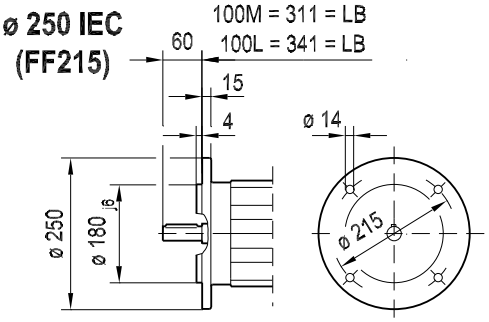

/ C

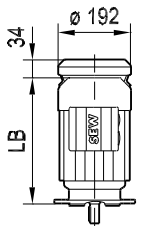

/ 2.WE

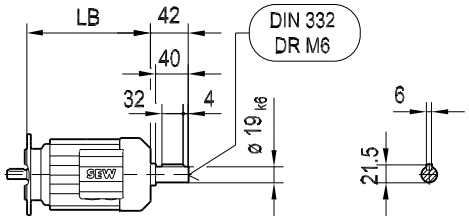

D(F)V100
D(F)VE100

SD(F)T100 = D(F)V100M

08 186 02 02
2 (2)

/ ASB. / ASE.
/ ACB. / ACE.

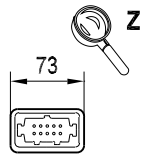

/ AMB. / AME.
/ ABB. / ABE.

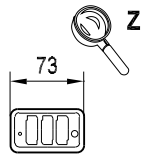

/ A.B.

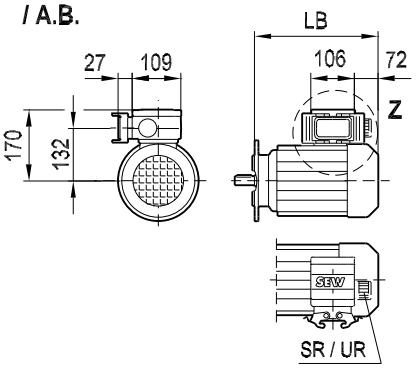

/ A.E.

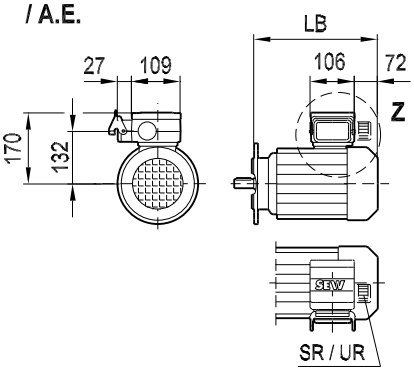

/ NV1.
/ NV2.

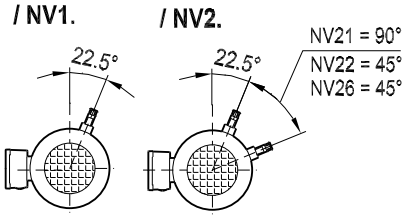

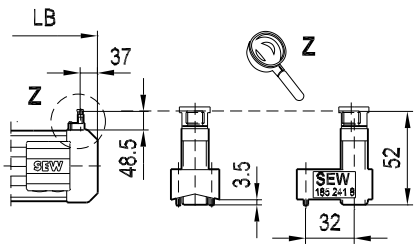

/ IS

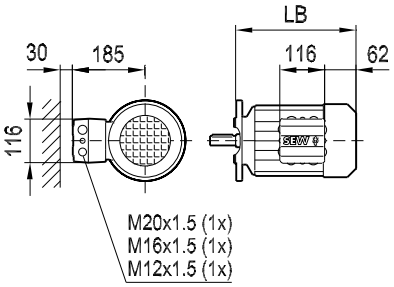

/ ES1. / AS3.

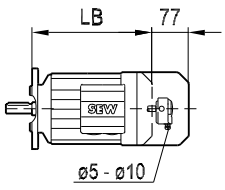

/ ES1A / AS3A

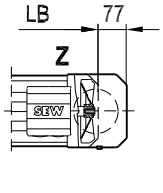

/ ES1A / AS3A / VR

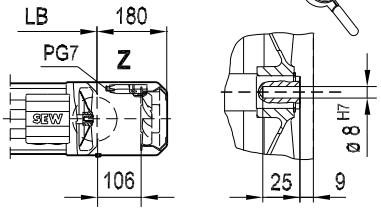

/ EV1A

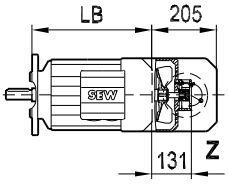

/ EV1.

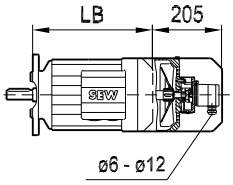

/ AV1.

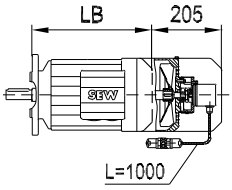

/ VR : X = 85
/ ES1. / AS3. / VR : X = 180
/ EV1. / AV1. / VR : X = 307

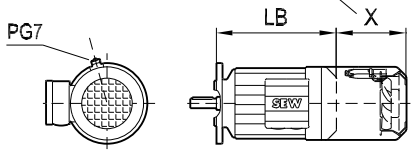

/ EV1A / VR

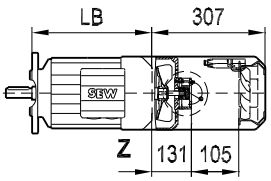

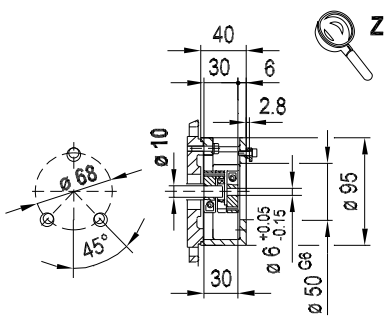

/ EV1A / VS

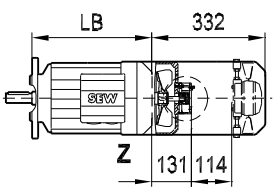

/ VS : X = 99
/ EV1. / AV1. / VS : X = 332

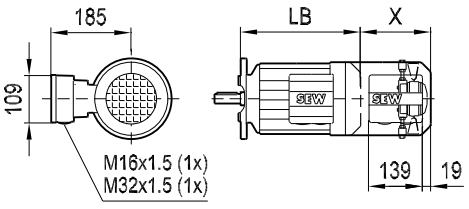

DV/DVE100 / BMG
DV/DVE100 / RS

SDT100 /BMG = DV100M /BMG

09 041 02 02
1 (2)

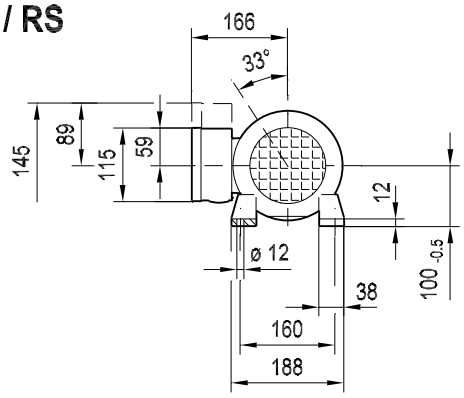

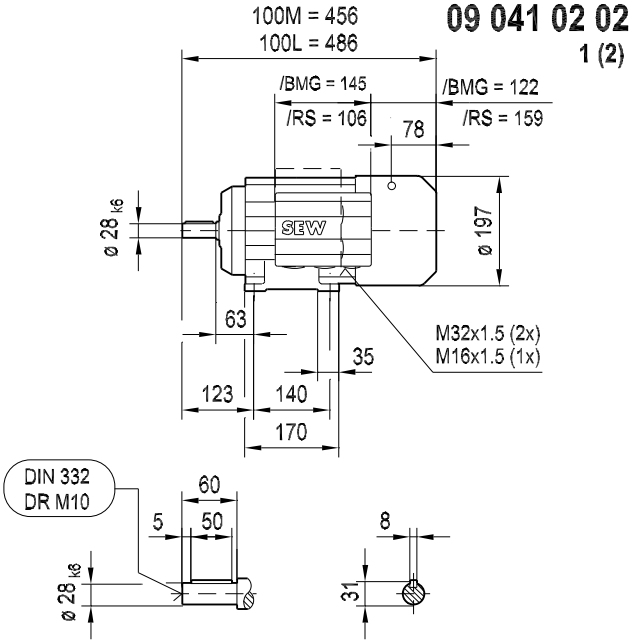

DFV/DFVE100 / BMG
DFV/DFVE100 / RS

SDFT100 /BMG = DFV100M /BMG

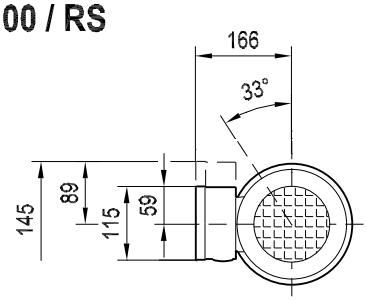

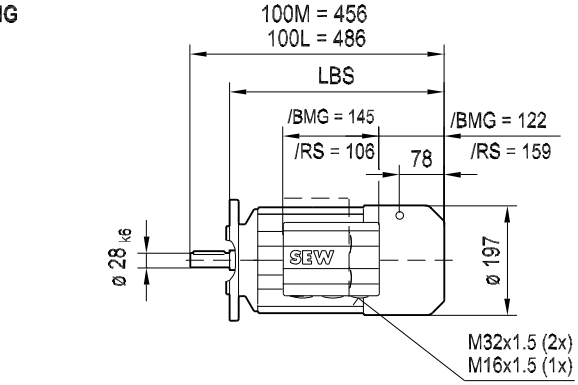

ø 200 (FF165)

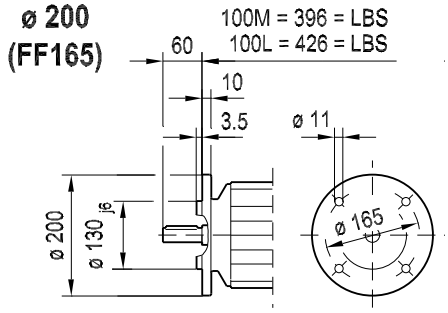

ø 250 IEC (FF215)

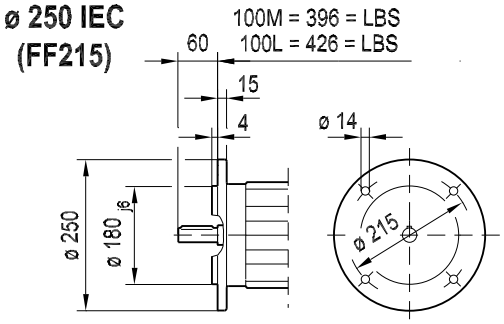

/ C

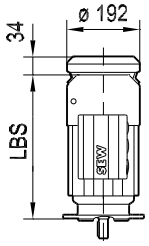

/ 2.WE

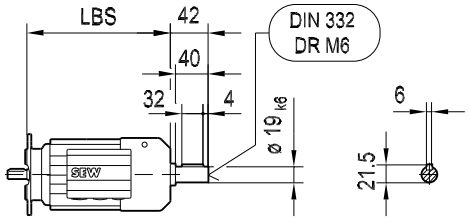

D(F)V100 / BMG
D(F)VE100 / BMG

SD(F)T100 / BMG = D(F)V100M / BMG

09 041 02 02
2 (2)

/ ASB. / ASE.
/ ACB. / ACE.

/ AMB. / AME.
/ ABB. / ABE.

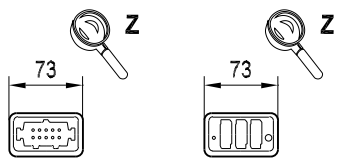

/ A.B.

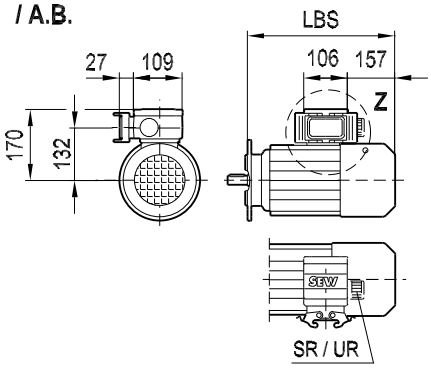

/ A.E.

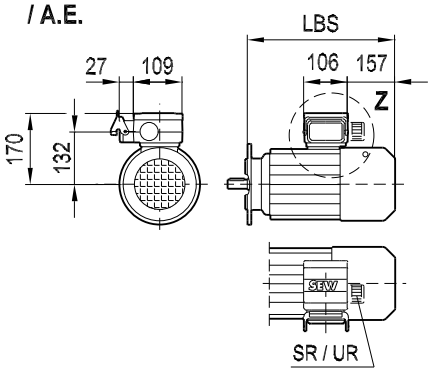

/ NV1.
/ NV2.

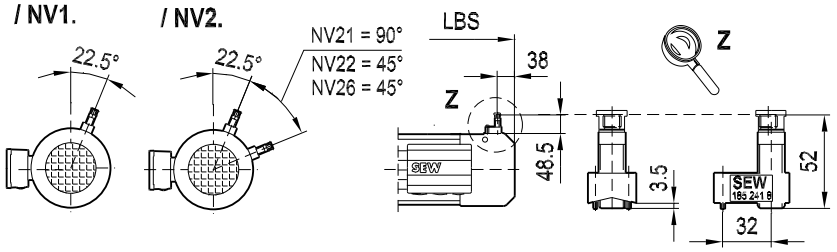

/ IS

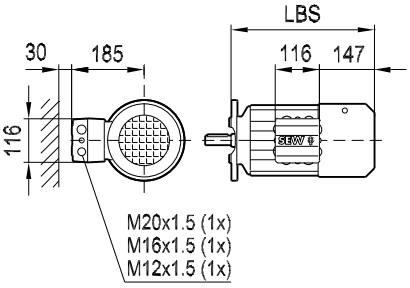

/ ES1. / AS3.
/ ES1A / AS3A
/ ES1A / AS3A / VR

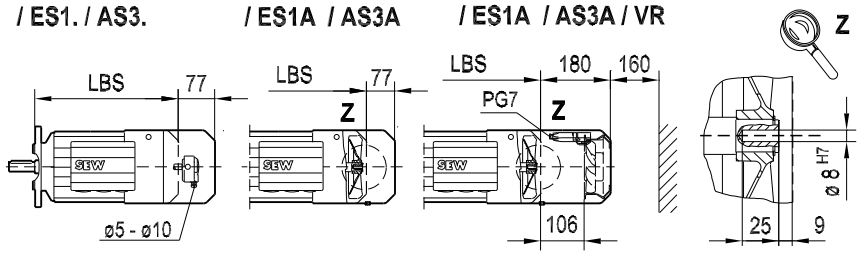

/ EV1A

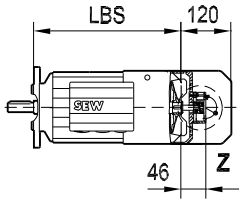

/ EV1.

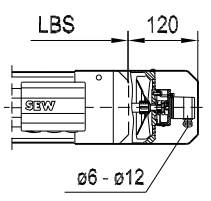

/ AV1.

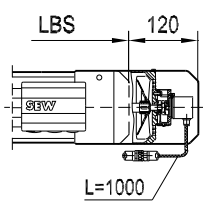

/ EV1A / VR

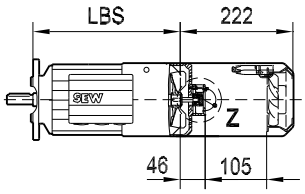

/ EV1A / VS

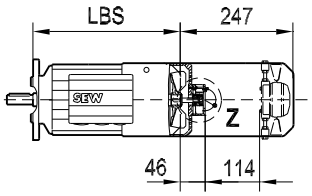

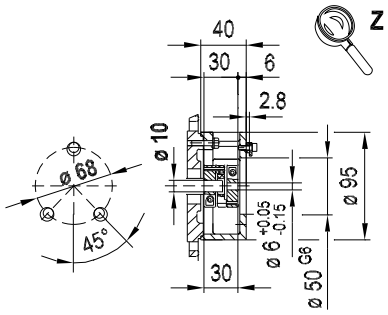

/ VR : X = 66
/ ES1. / AS3. / VR : X = 180
/ EV1. / AV1. / VR : X = 222

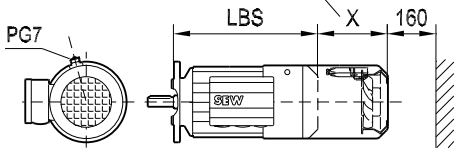

/ VS : X = 91
/ EV1. / AV1. / VS : X = 247

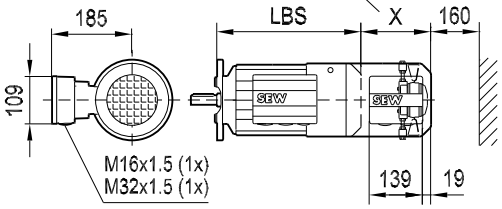

DV/DVE112M

08 187 03 02
1 (2)

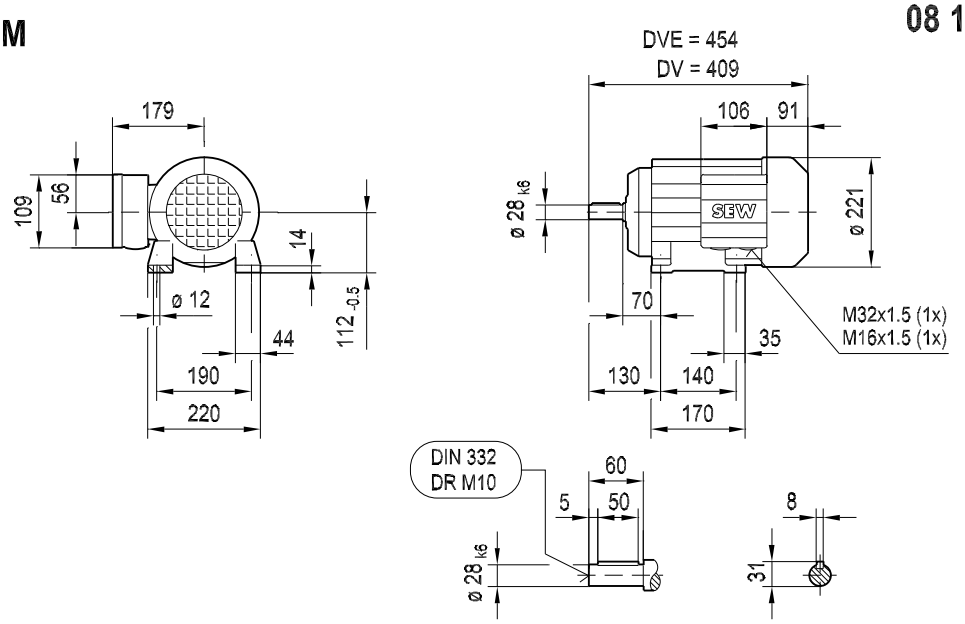

DFV/DFVE112M

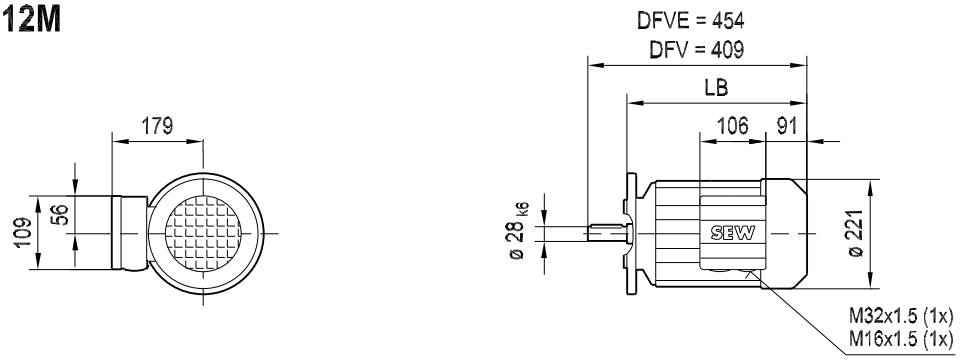

ø 200 (FF165)

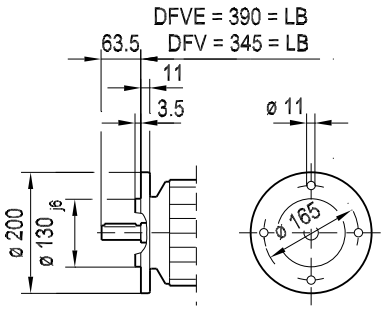

ø 250 IEC (FF215)

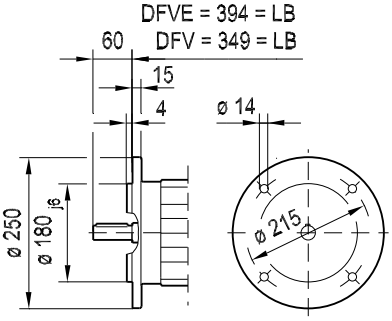

ø 300 (FF265)

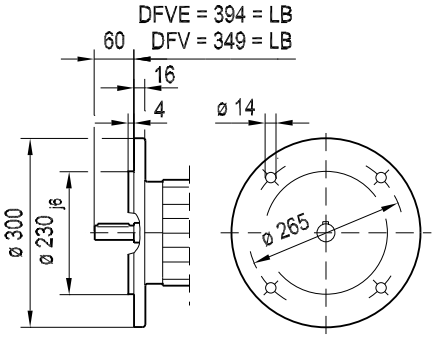

/ C

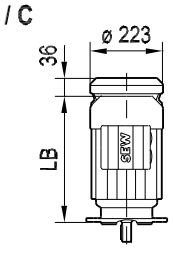

/ 2.WE

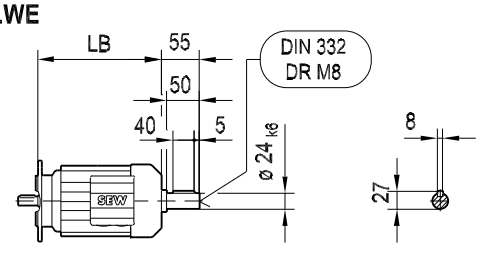

D(F)V112M
D(F)VE112M

08 187 03 02
2 (2)

/ ASB. / ASE.
/ ACB. / ACE.

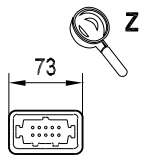

/ AMB. / AME.
/ ABB. / ABE.

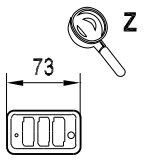

/ A.B.

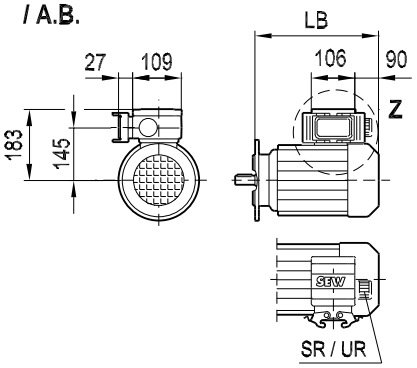

/ A.E.

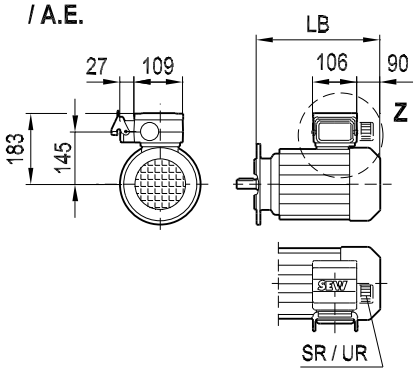

/ NV1.
/ NV2.

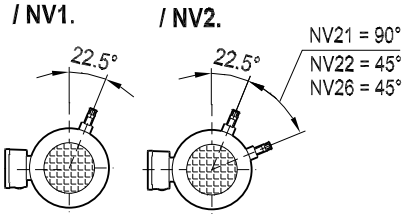

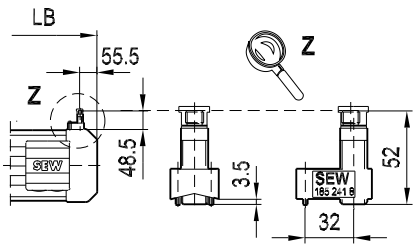

/ IS

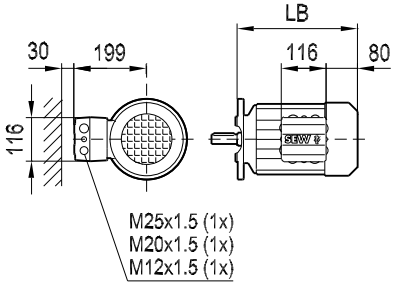

/ ES2. / AS4.

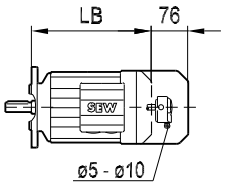

/ ES2A / AS4A

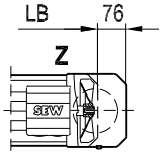

/ ES2A / AS4A / VR

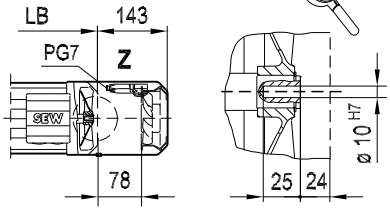

/ EV1A

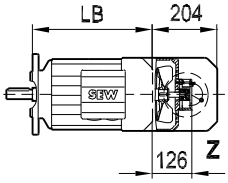

/ EV1.

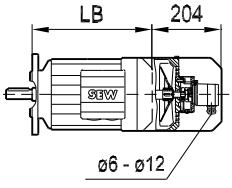

/ AV1.

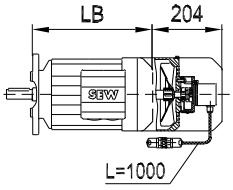

/ EV1A / VR

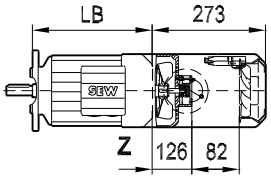

/ EV1A / VS

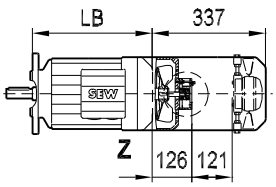

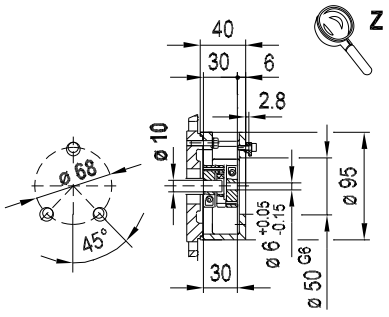

/ VR : X = 104
/ ES2. / AS4. / VR : X = 141
/ EV1. / AV1. / VR : X = 271

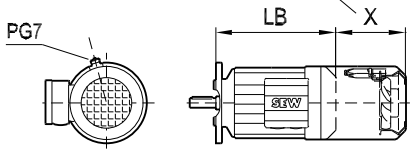

/ VS : X = 85
/ EV1. / AV1. / VS : X = 336

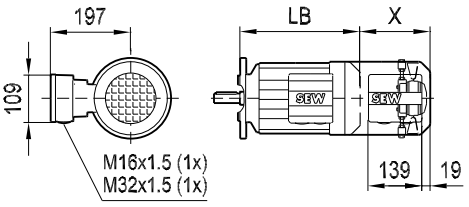

DV/DVE112M / BMG
DV/DVE112M / RS

09 042 03 02
1 (2)

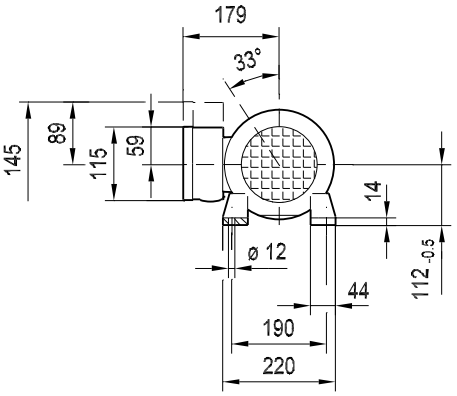

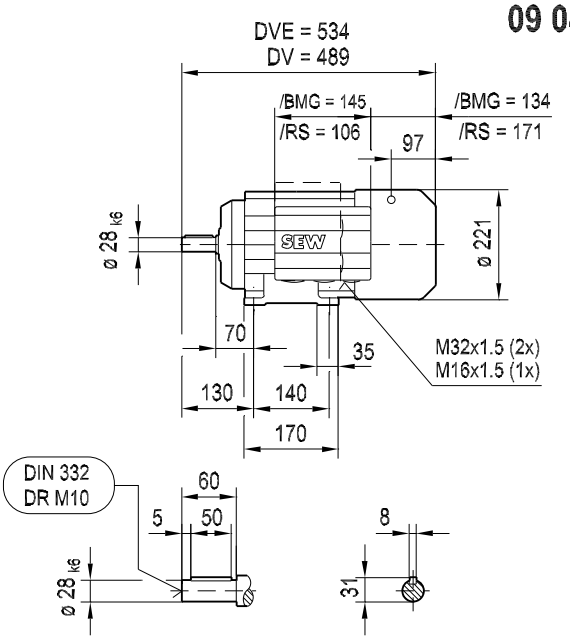

DFV/DFVE112M / BMG
DFV/DFVE112M / RS

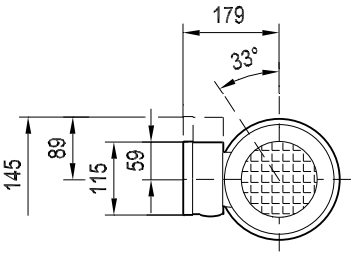

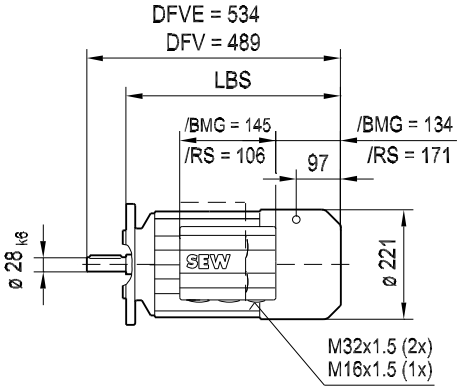

ø 200 (FF165)

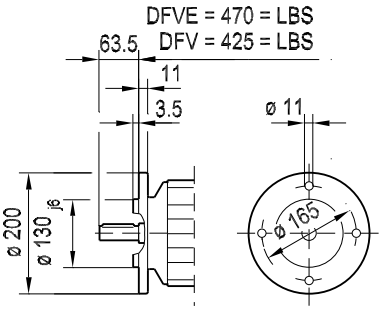

ø 250 IEC (FF215)

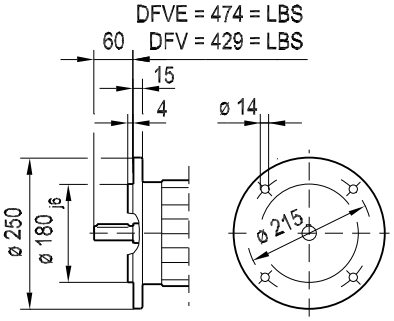

ø 300 (FF265)

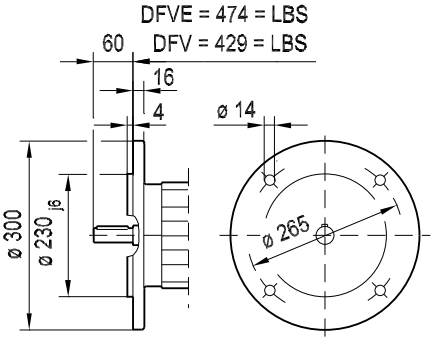

/ C

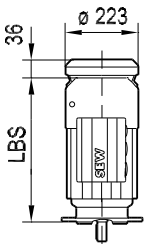

/ 2.WE

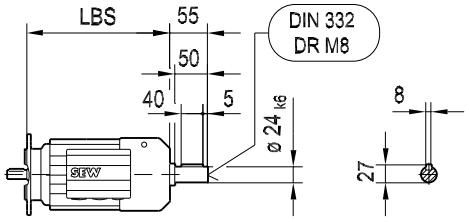

D(F)V112M / BMG
D(F)VE112M / BMG

09 042 03 02
2 (2)

/ ASB. / ASE.
/ ACB. / ACE.

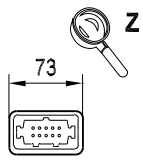

/ AMB. / AME.
/ ABB. / ABE.

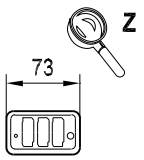

/ A.B.

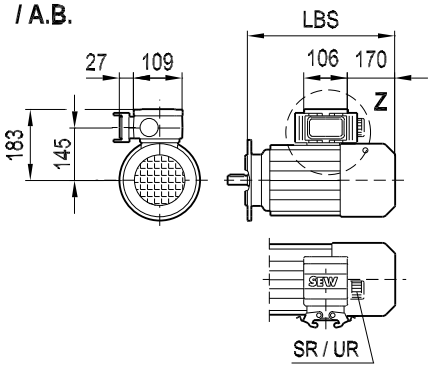

/ A.E.

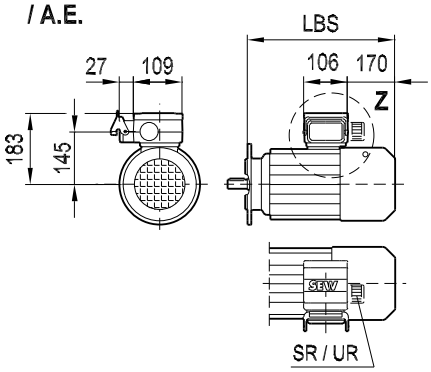

/ NV1.
/ NV2.

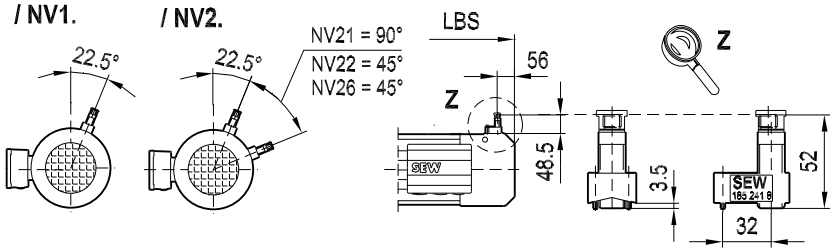

/ IS

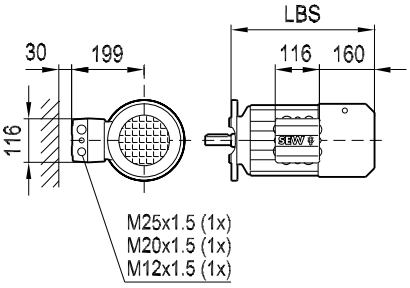

/ ES2. / AS4.

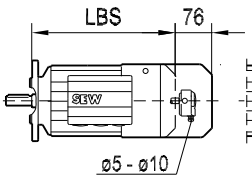

/ ES2A / AS4A

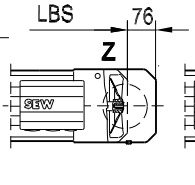

/ ES2A / AS4A / VR

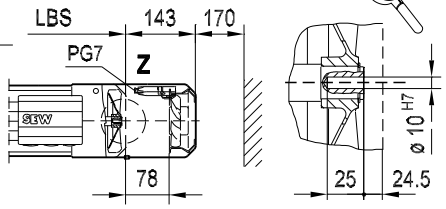

/ EV1A

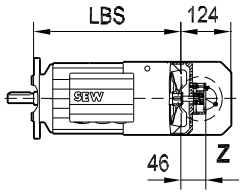

/ EV1.

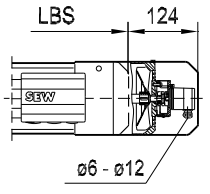

/ AV1.

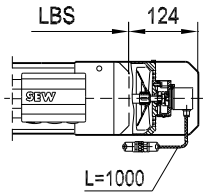

/ EV1A / VR

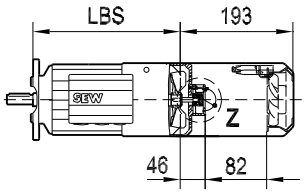

/ EV1A / VS

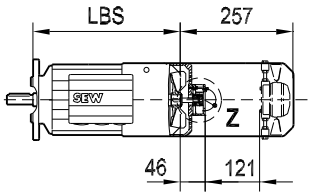

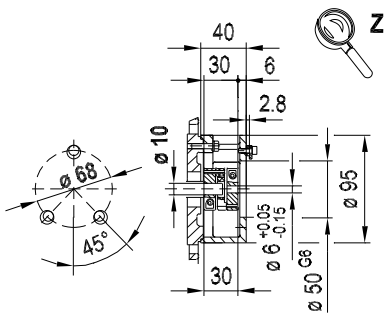

/ VR : X = 54
/ ES2. / AS4. / VR : X = 141
/ EV1. / AV1. / VR : X =191

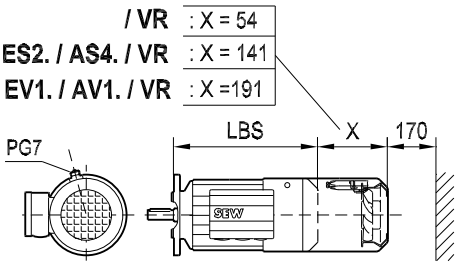

/ VS : X = 92
/ EV1. / AV1. / VS : X = 257

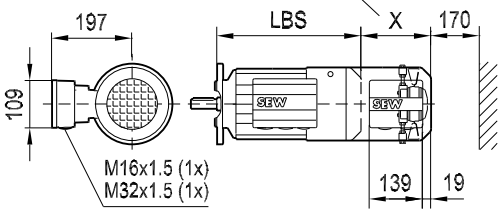

DV/DVE132S

08 188 03 02
1 (2)

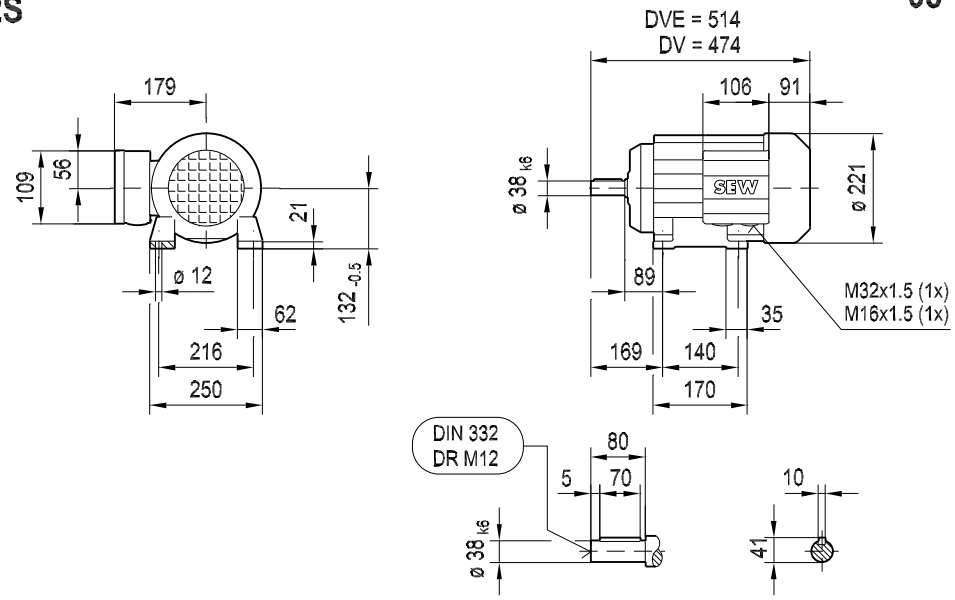

DFV/DFVE132S

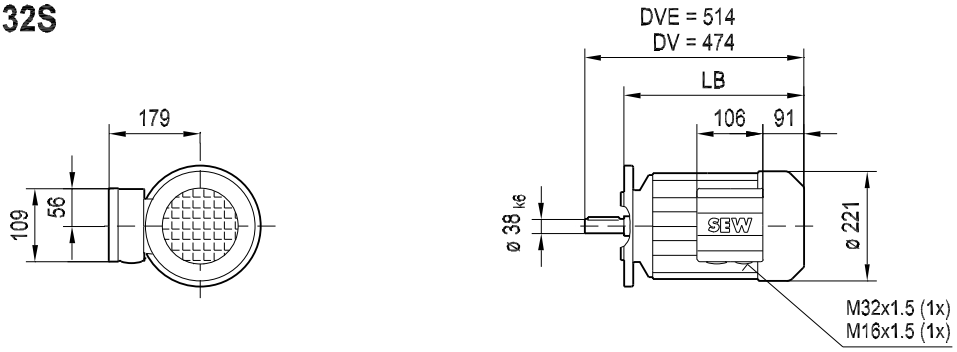

ø 250 (FF215)

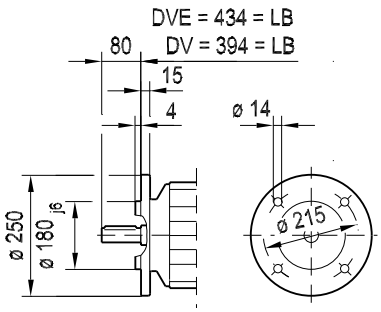

ø 300 IEC (FF265)

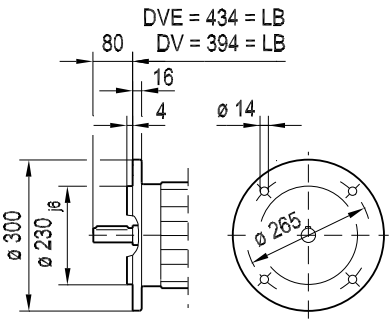

ø 350 (FF300)

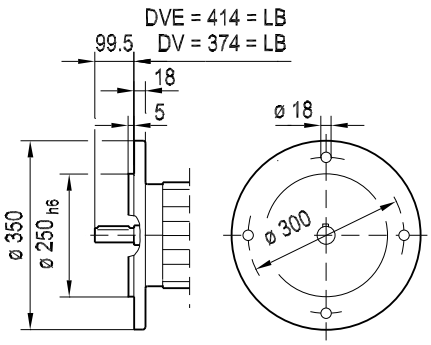

/ C

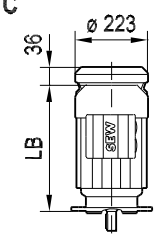

/ 2.WE

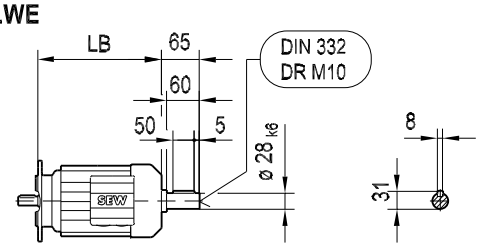

D(F)V132S
D(F)VE132S

08 188 03 02
2 (2)

/ ASB. / ASE.
/ ACB. / ACE.

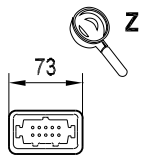

/ AMB. / AME.
/ ABB. / ABE.

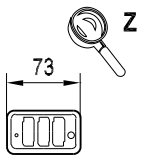

/ A.B.

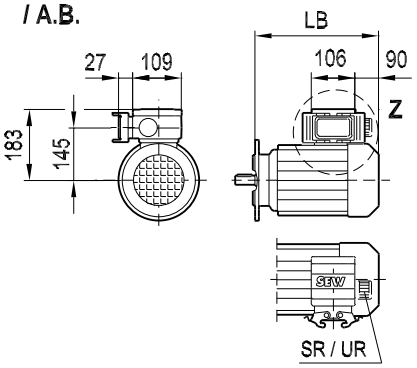

/ A.E.

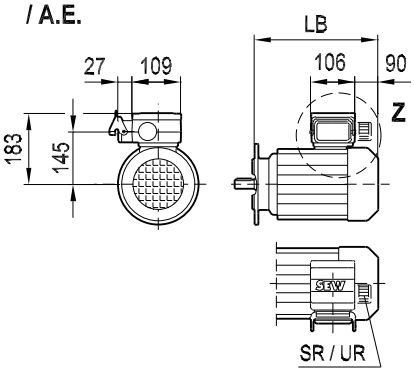

/ NV1.
/ NV2.

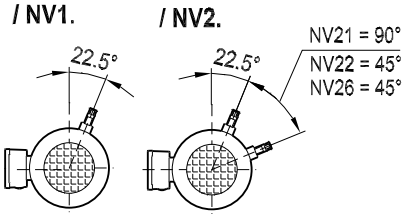

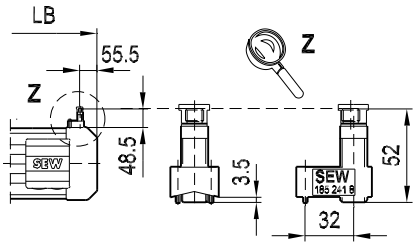

/ IS

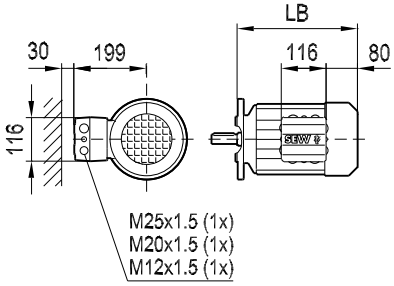

/ ES2. / AS4.

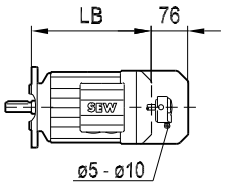

/ ES2A / AS4A

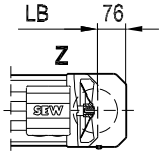

/ ES2A / AS4A / VR

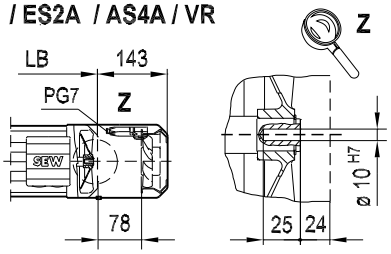

/ EV1A

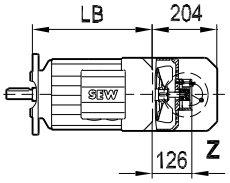

/ EV1.

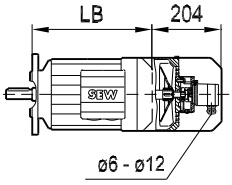

/ AV1.

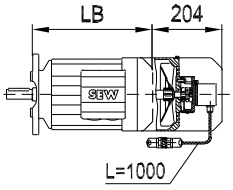

/ EV1A / VR

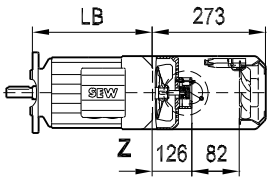

/ EV1A / VS

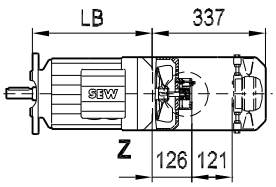

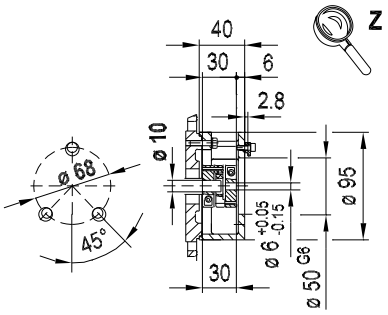

/ VR : X = 104
/ ES2. / AS4. / VR : X = 141
/ EV1. / AV1. / VR : X = 271

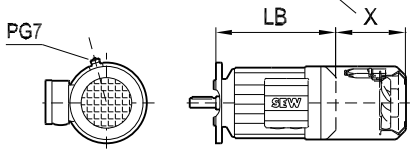

/ VS : X = 85
/ EV1. / AV1. / VS : X = 336

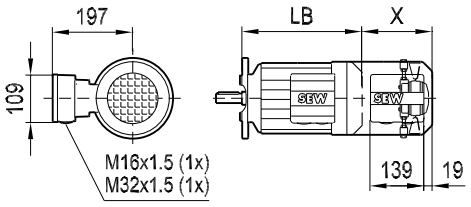

DV/DVE132S / BMG
DV/DVE132S / RS

09 043 02 02
1 (2)

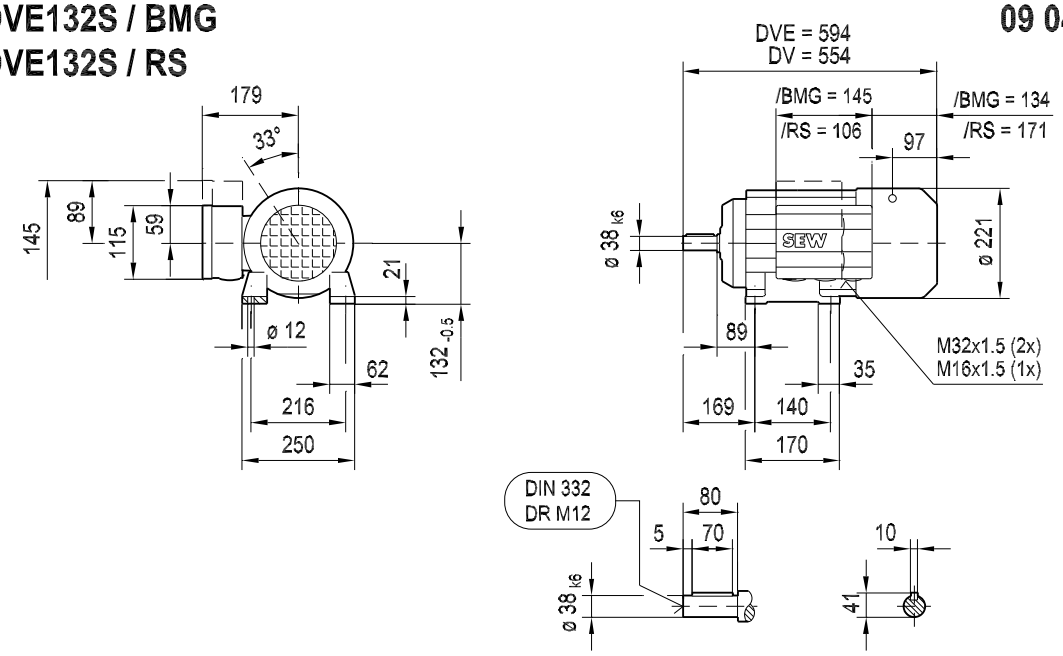

DFV/DFVE132S / BMG
DFV/DFVE132S / RS

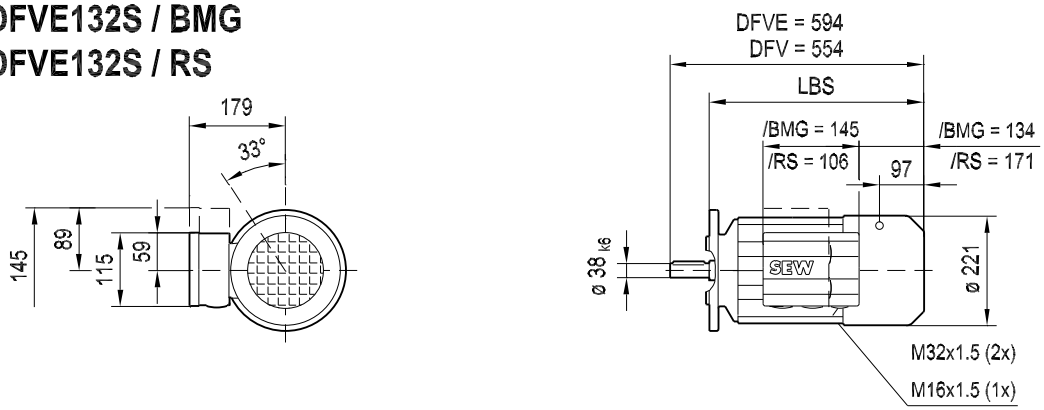

ø 250 (FF215)

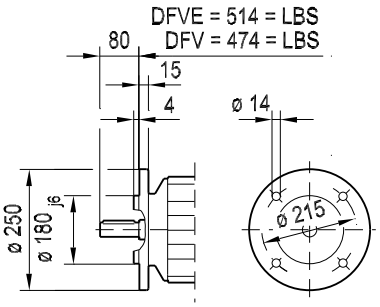

ø 300 IEC (FF265)

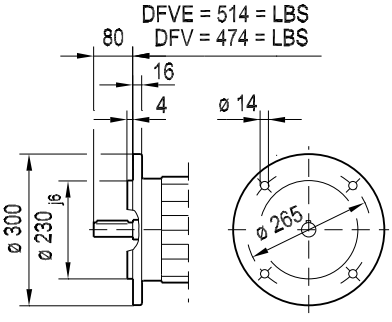

ø 350 (FF300)

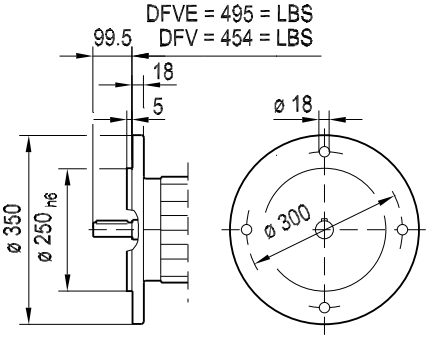

/ C

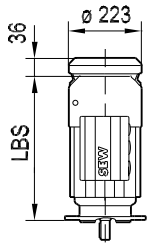

/ 2.WE

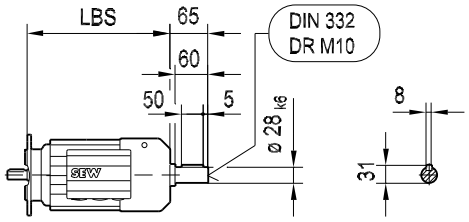

D(F)V132S / BMG
D(F)VE132S / BMG

09 043 02 02
2 (2)

/ ASB. / ASE.
/ ACB. / ACE.

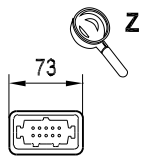

/ AMB. / AME.
/ ABB. / ABE.

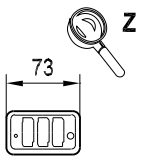

/ A.B.

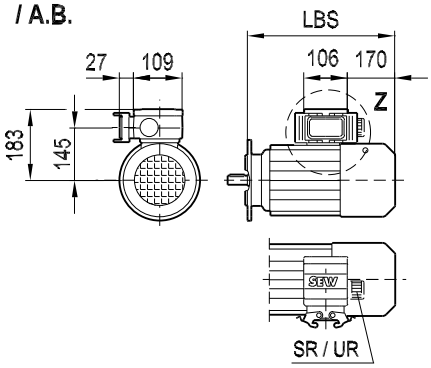

/ A.E.

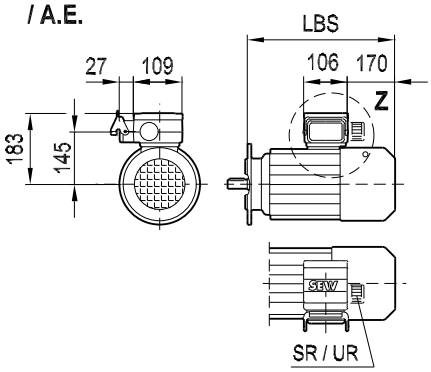

/ NV1.

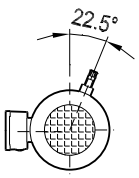

/ NV2.

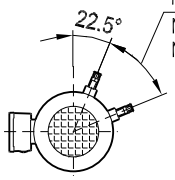

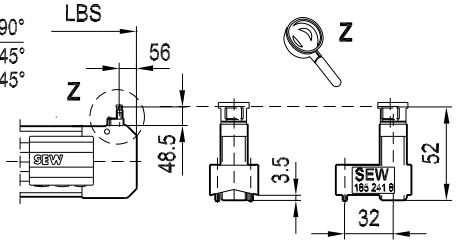

/ IS

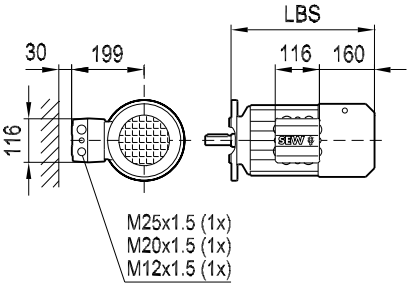

/ ES2. / AS4.

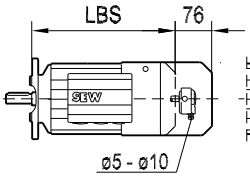

/ ES2A / AS4A

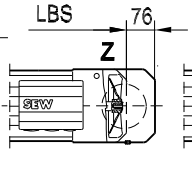

/ ES2A / AS4A / VR

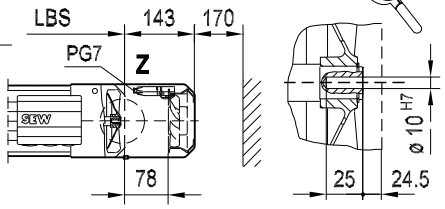

/ EV1A

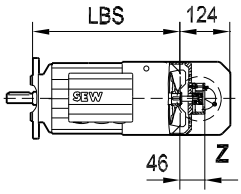

/ EV1.

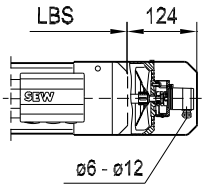

/ AV1.

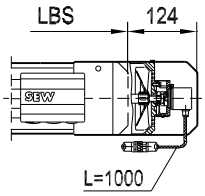

/ EV1A / VR

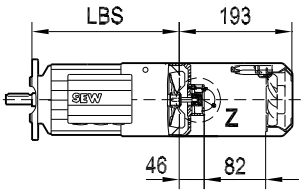

/ EV1A / VS

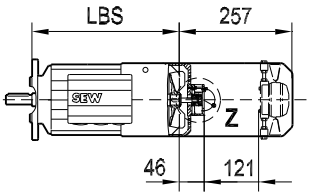

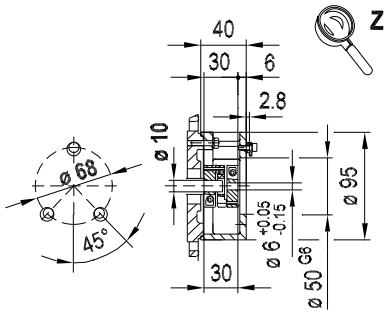

/ VR : X = 54
/ ES2. / AS4. / VR : X = 141
/ EV1. / AV1. / VR : X =191

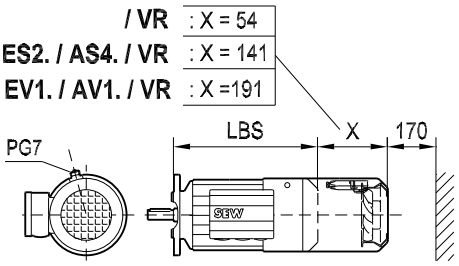

/ VS : X = 92
/ EV1. / AV1. / VS : X = 257

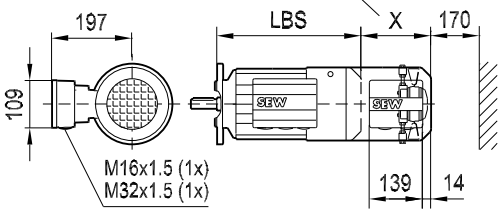

DV132M

08 189 03 02
1 (2)

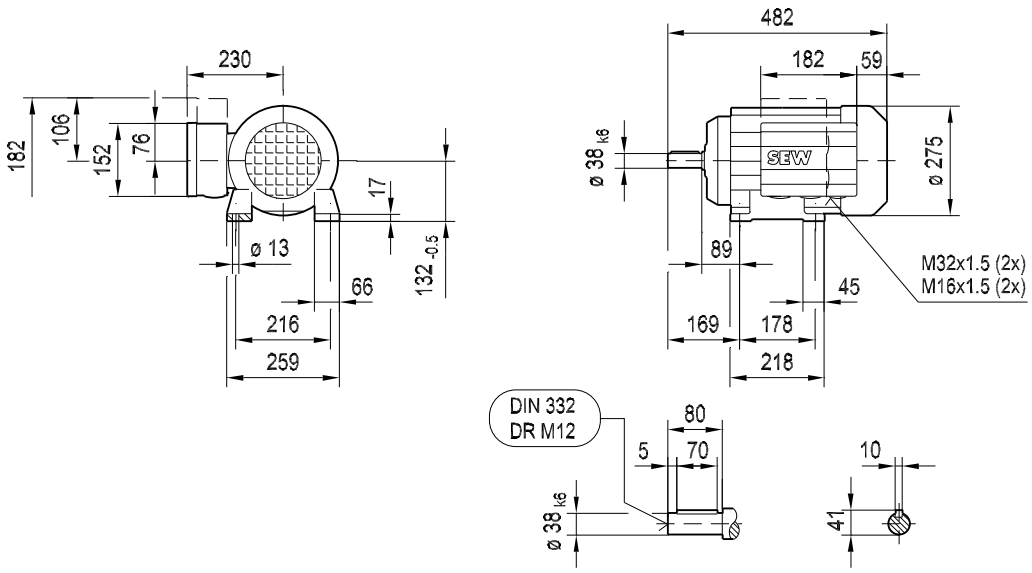

DFV132M

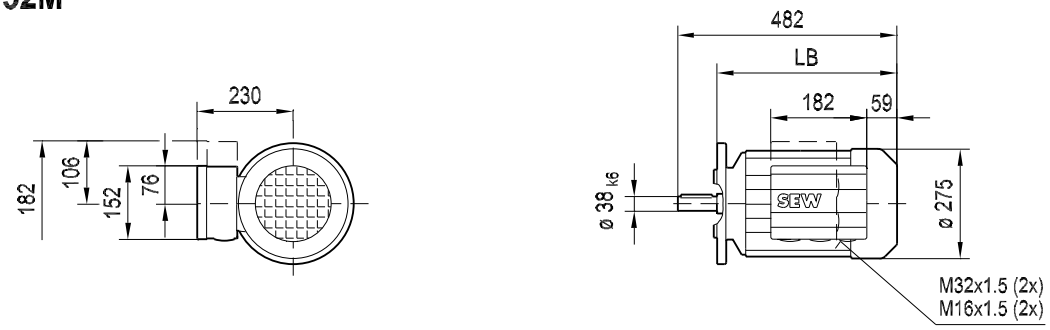

ø 250 (FF215)

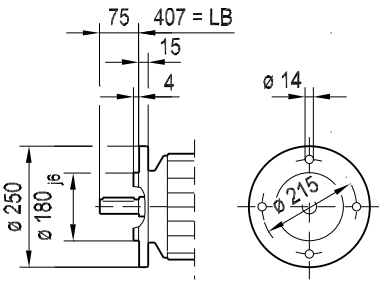

ø 300 IEC (FF265)

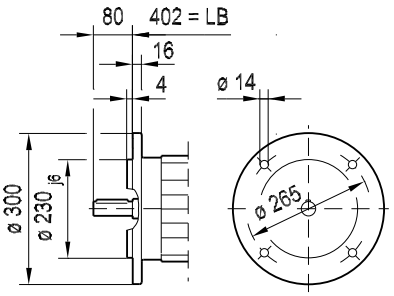

ø 350 (FF300)

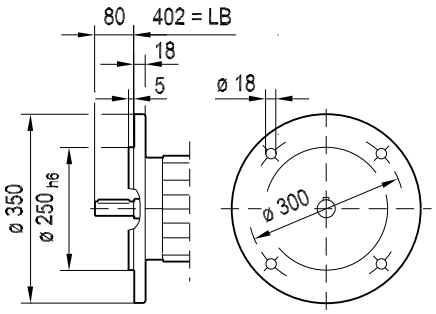

/ C

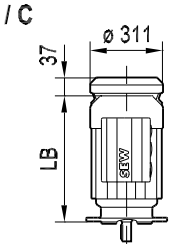

/ 2.WE

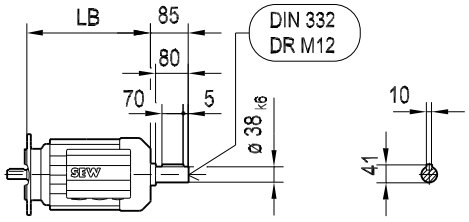

D(F)V132M

08 189 03 02
2 (2)

/ ABB.
/ ADB.

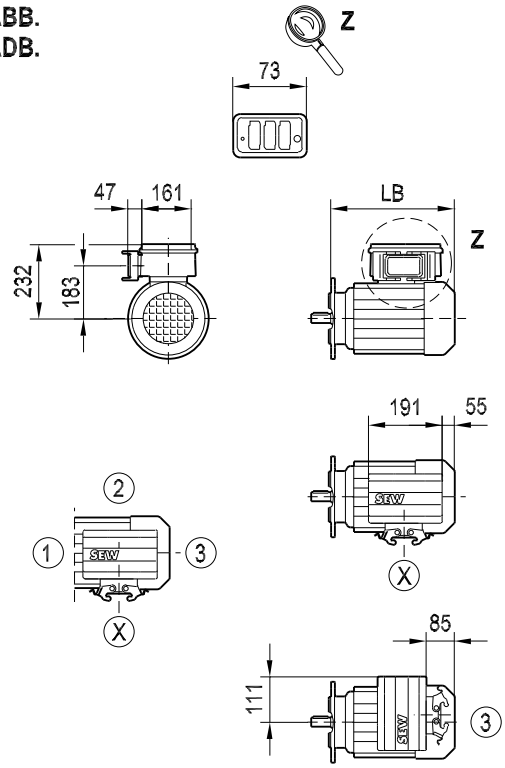

/ ABE.
/ ADE.

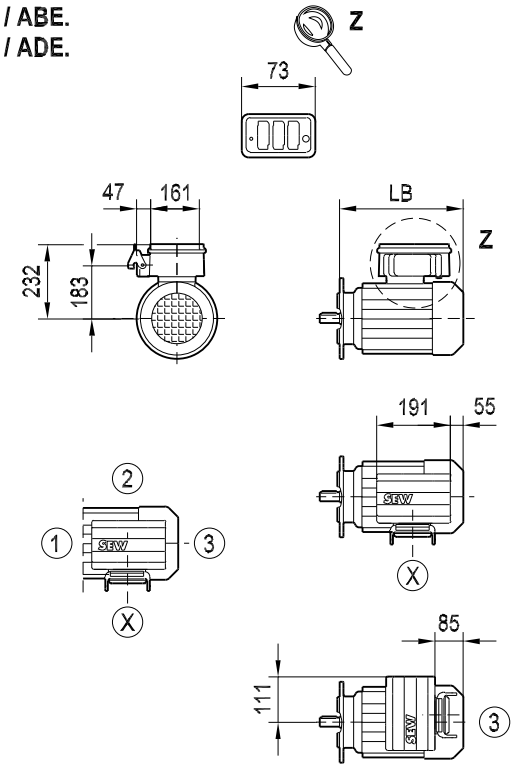

/ EV1.

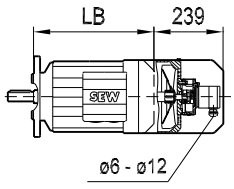

/ AV1.

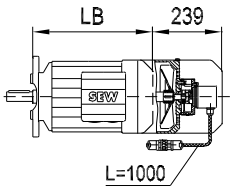

/ EV1A

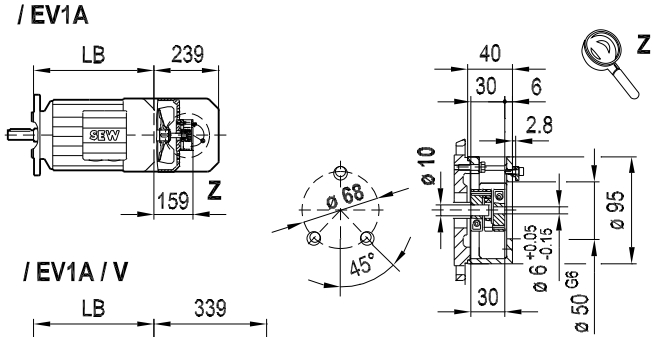

/ EV1A / V

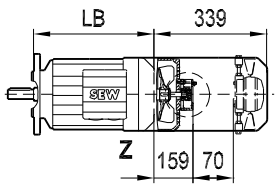

/ V : ß = 90° ; X = 112
/ EV1. / V : ß = 43° ; X = 339
/ AV1. / V : ß = 43° ; X = 339

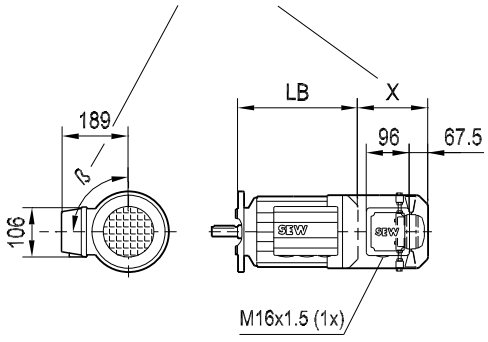

DV132M / BM / RS

09 044 04 02
1 (2)

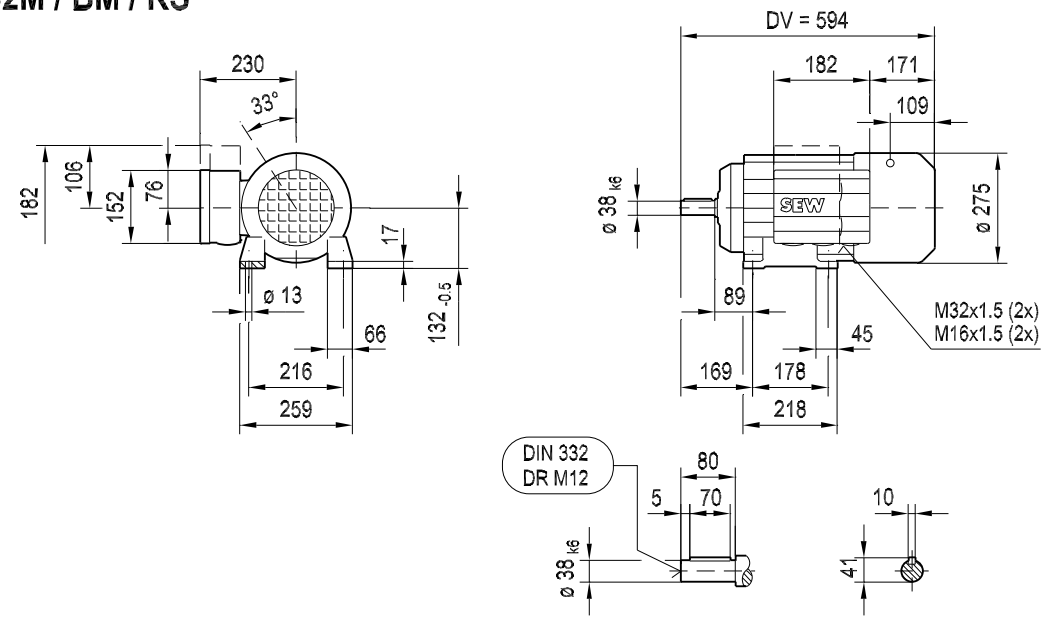

DFV132M / BM / RS

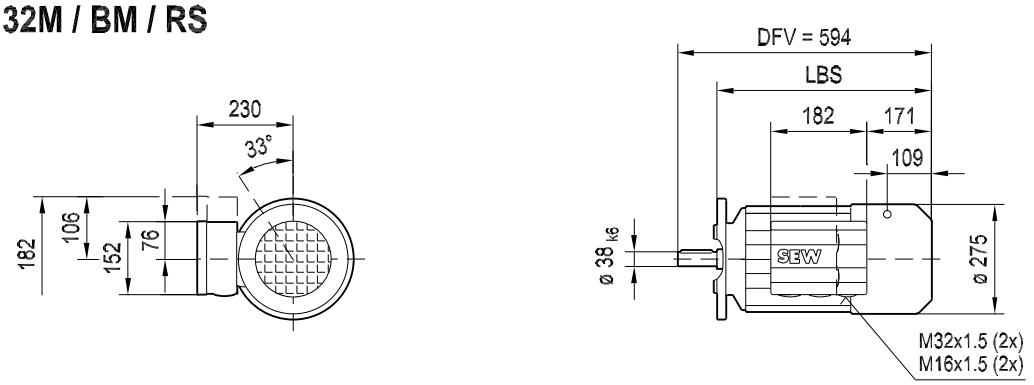

ø 250 (FF215)

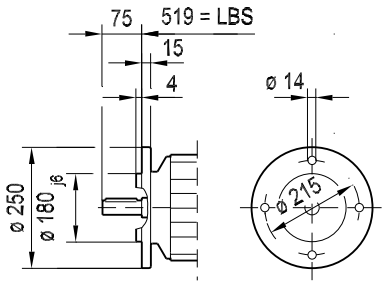

ø 300 IEC (FF265)

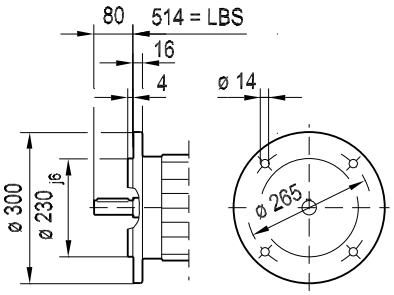

ø 350 (FF300)

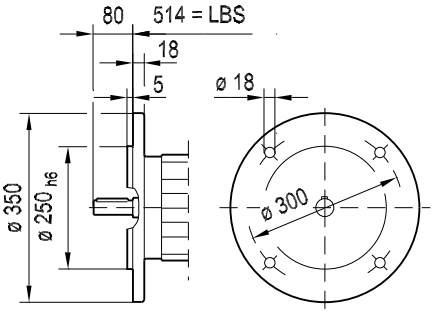

/ C

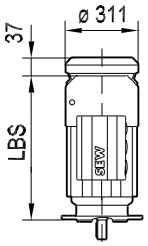

/ 2.WE

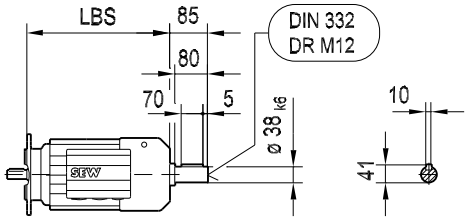

D(F)V132M / BM

09 044 04 02
2 (2)

/ ABB.
/ ADB.

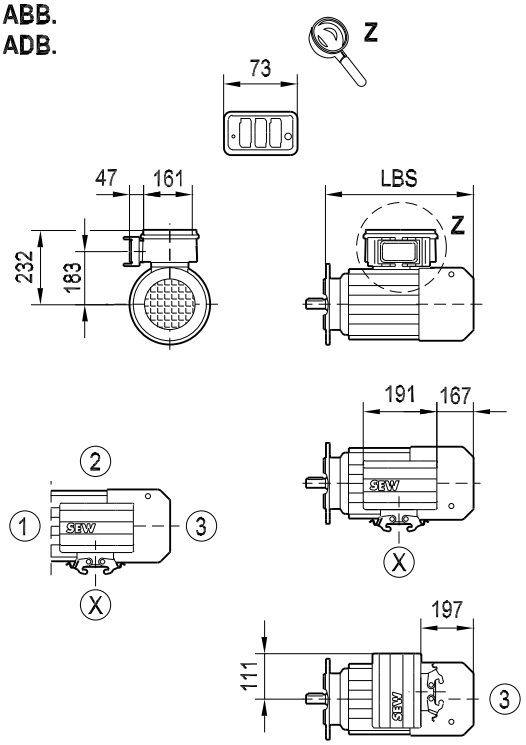

/ ABE.
/ ADE.

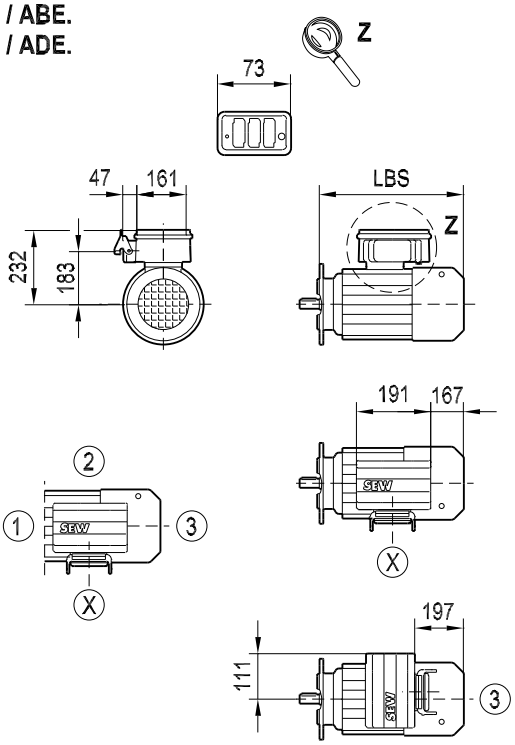

/ EV1.

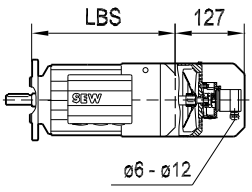

/ AV1.

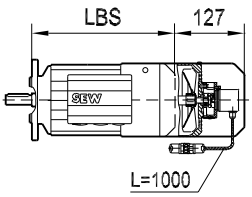

/ EV1A

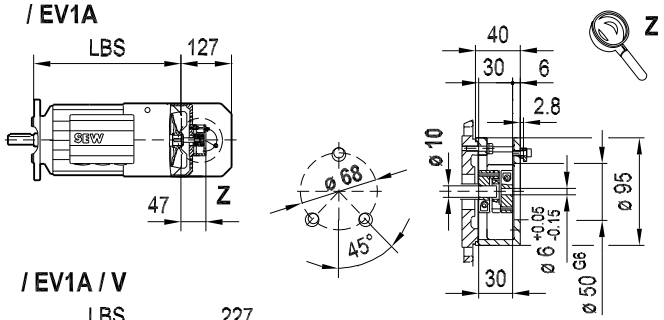

/ EV1A / V

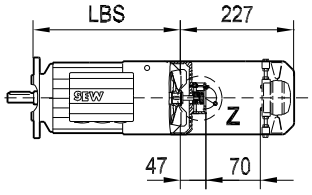

/ V : ß = 90° ; X = 123
/ EV1. / V : ß = 43° ; X = 227
/ AV1. / V : ß = 43° ; X = 227

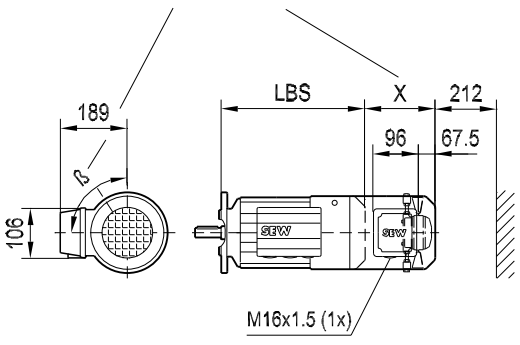

08 190 04 02
1 (2)

DVE132M
DV132ML

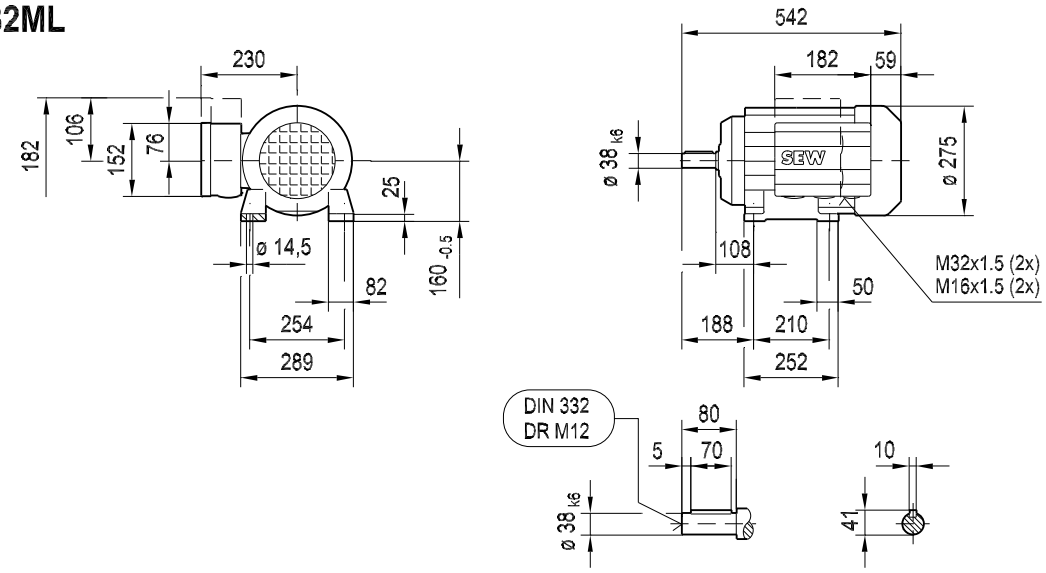

DFVE132M
DFV132ML

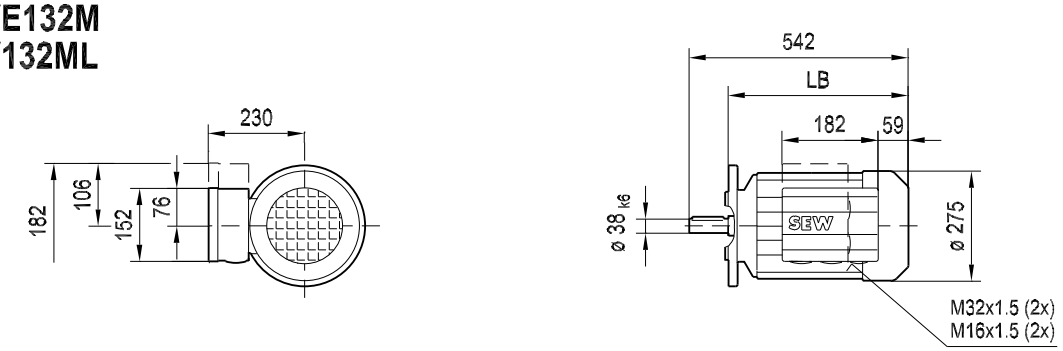

ø 300 IEC (FF265)

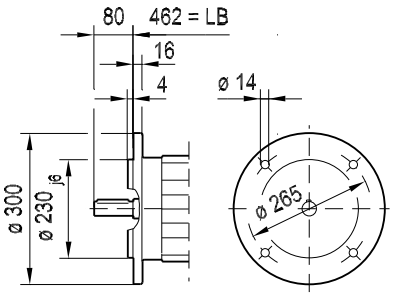

ø 350 (FF300)

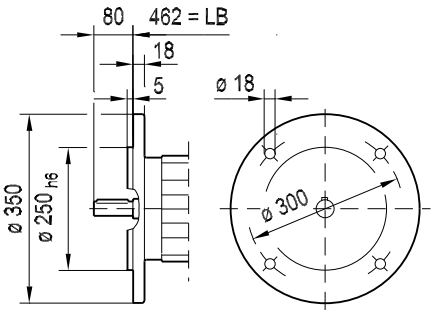

/ C

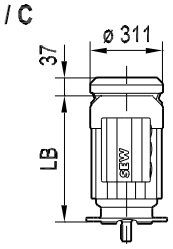

/ 2.WE

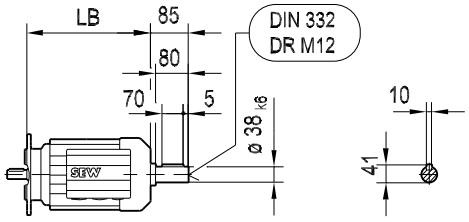

D(F)VE132M
D(F)V132ML

08 190 04 02
2 (2)

/ ABB.
/ ADB.

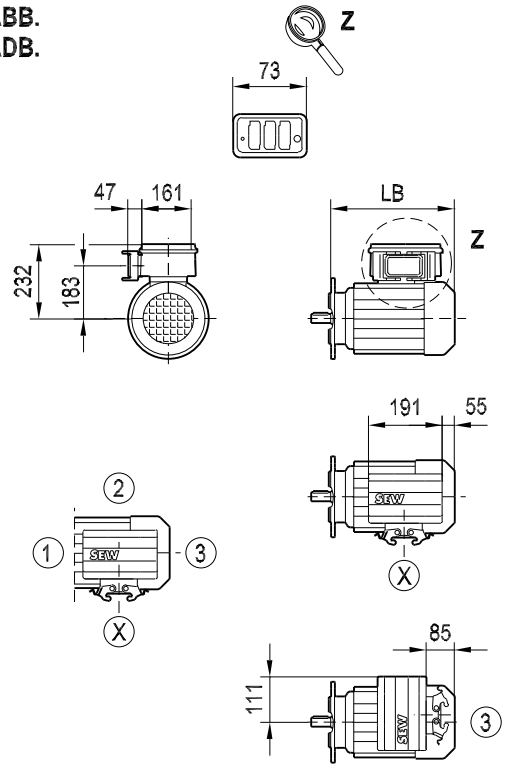

/ ABE.
/ ADE.

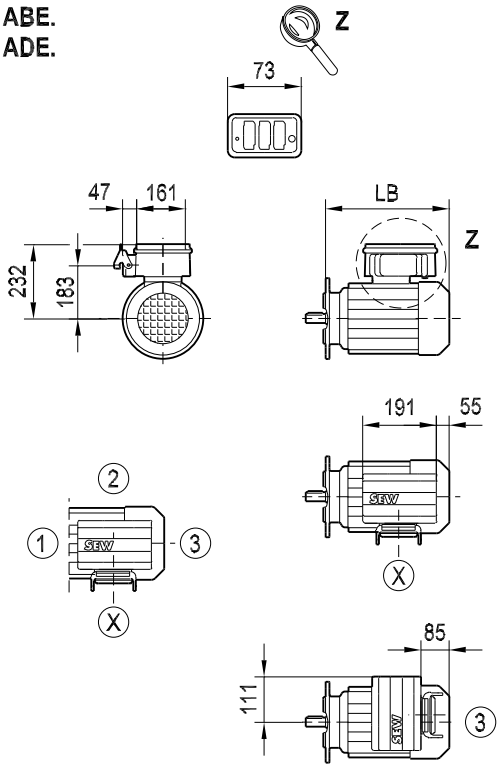

/ EV1.

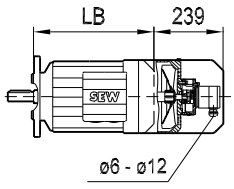

/ AV1.

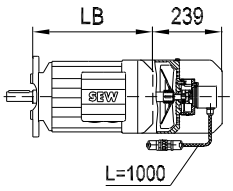

/ EV1A

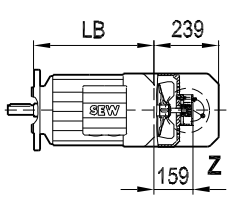

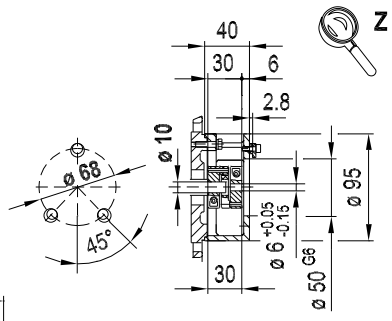

/ EV1A / V

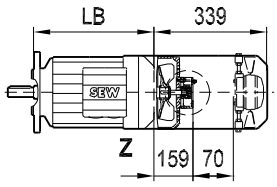

/ V : ß = 90° ; X = 112
/ EV1. / V : ß = 43° ; X = 339
/ AV1. / V : ß = 43° ; X = 339

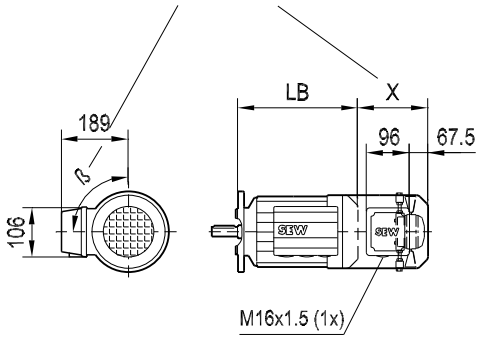

09 045 04 02
1 (2)

DVE132M / BM / RS
DV132ML / BM / RS

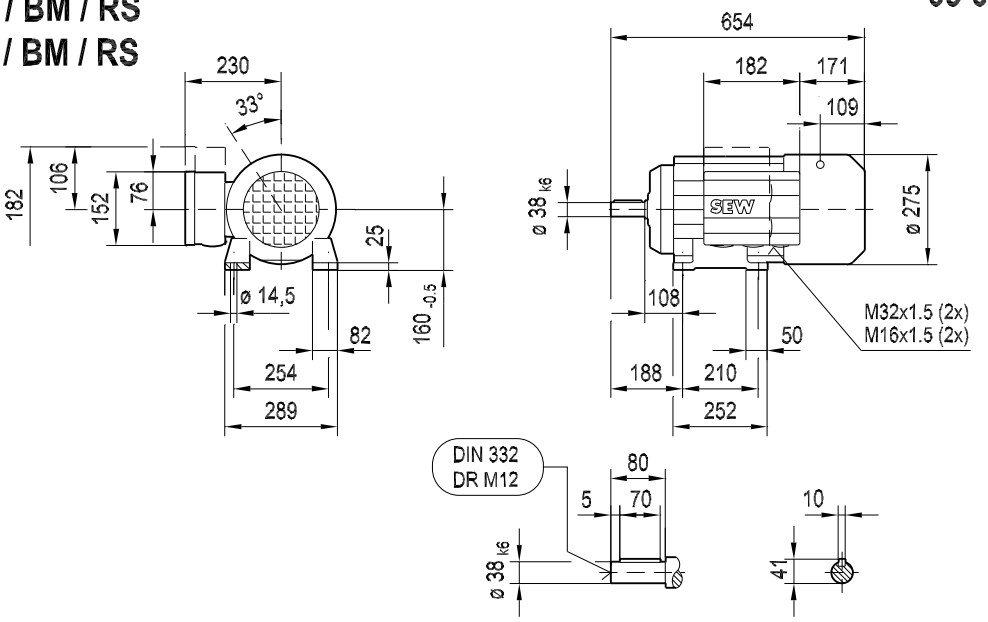

DFVE132M / BM / RS
DFV132ML / BM / RS

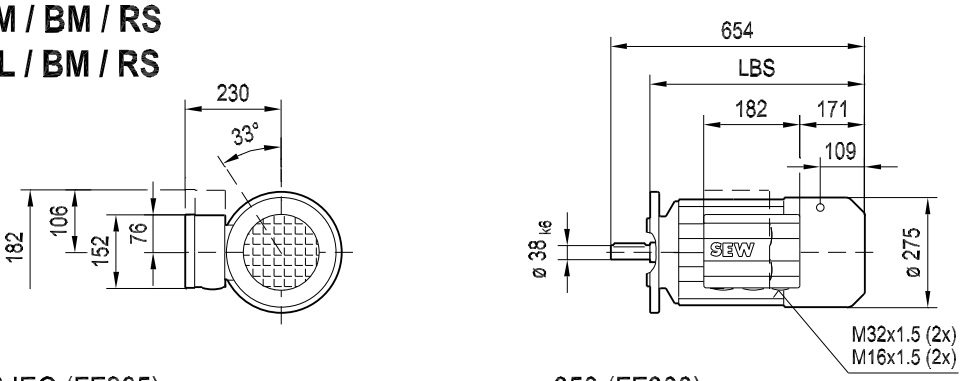

ø 300 IEC (FF265)

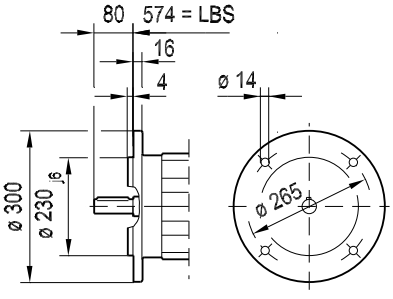

ø 350 (FF300)

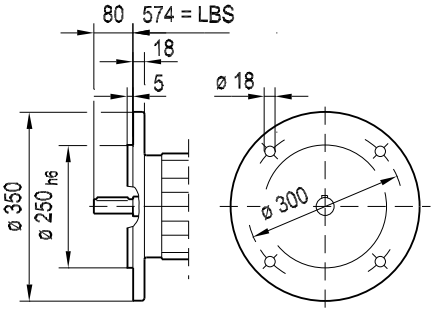

/ C

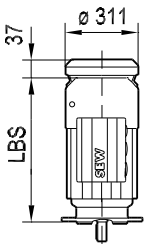

/ 2.WE

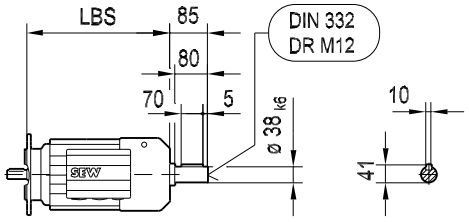

D(F)VE132M / BM
D(F)V132ML / BM

09 045 04 02
2 (2)

/ ABB.
/ ADB.

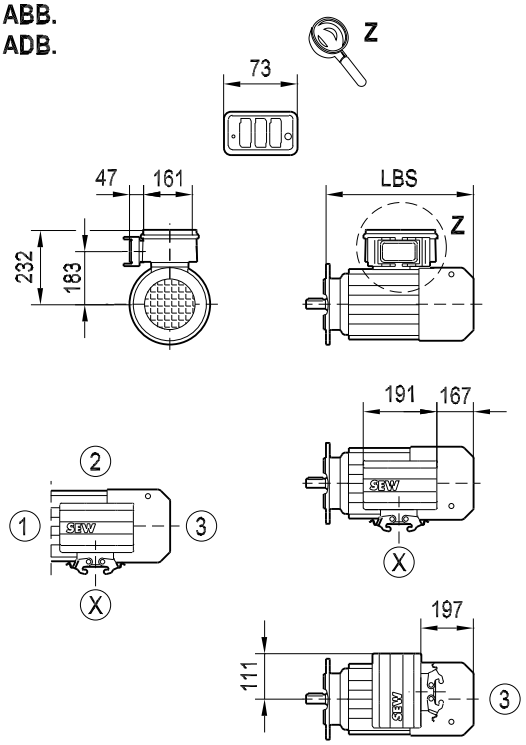

/ ABE.
/ ADE.

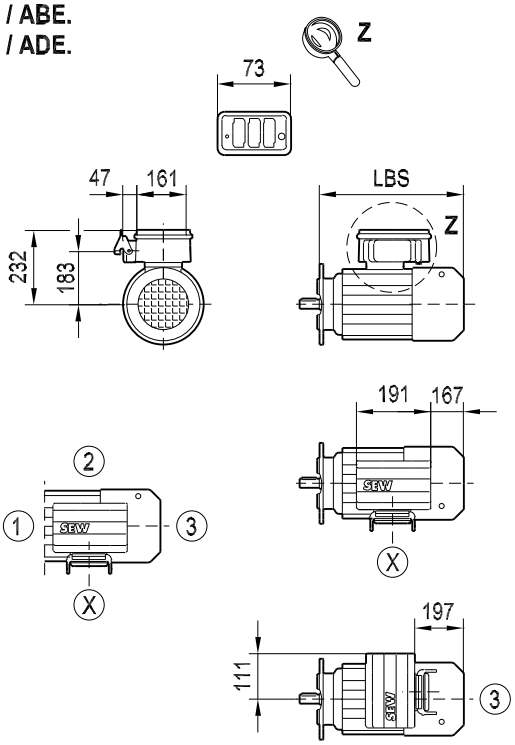

/ EV1.

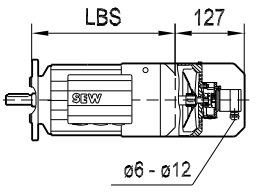

/ AV1.

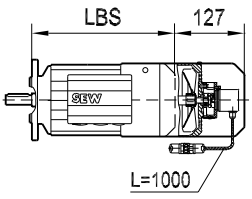

/ EV1A

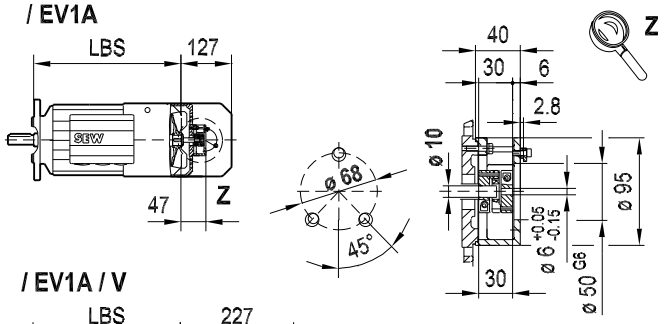

/ EV1A / V

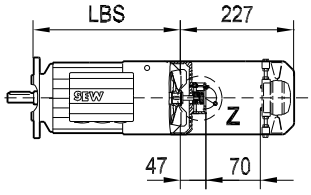

/ V : ß = 90° ; X = 123
/ EV1. / V : ß = 43° ; X = 227
/ AV1. / V : ß = 43° ; X = 227

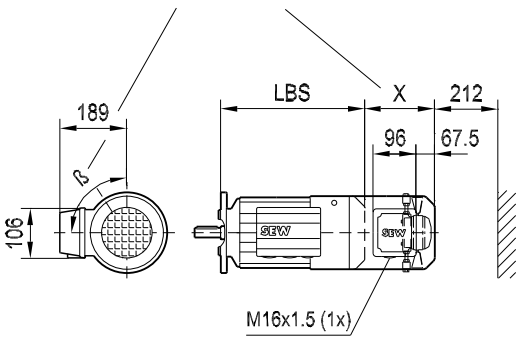

DV/DVE160M

08 191 04 02
1 (2)

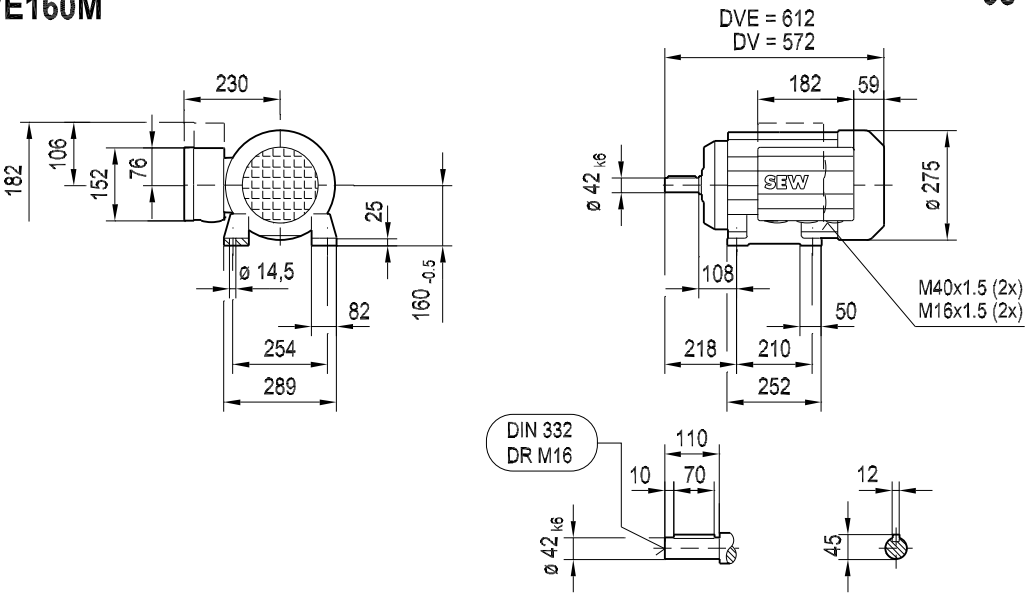

DFV/DFVE160M

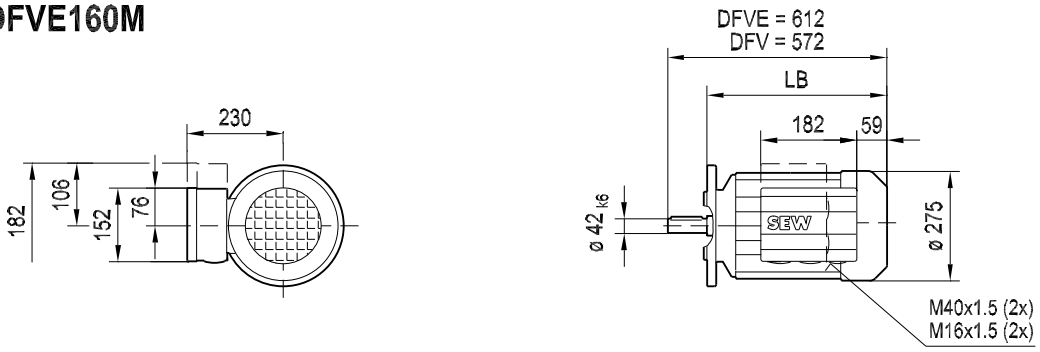

ø 300 (FF265)

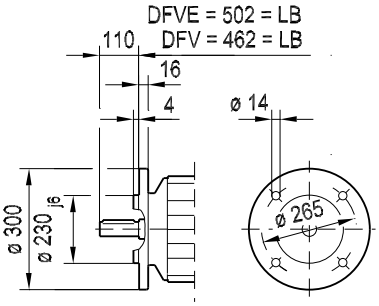

ø 350 IEC (FF300)

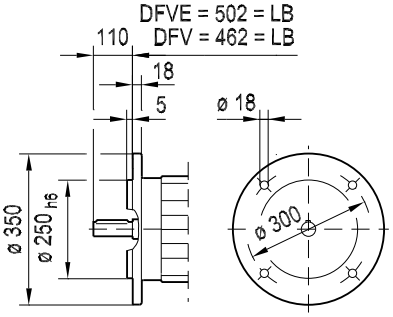

ø 450 (FF400)

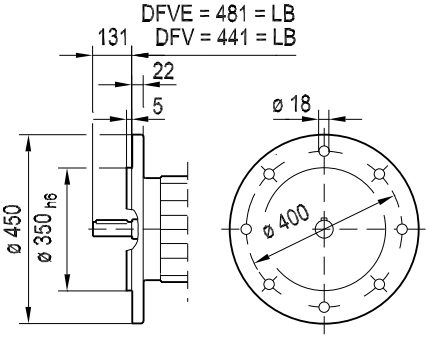

/ C

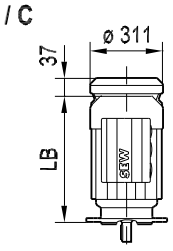

/ 2.WE

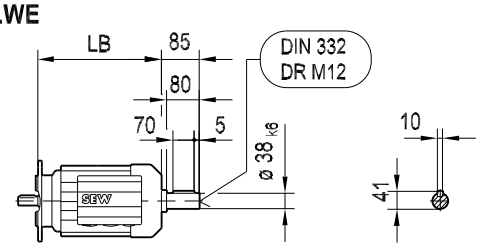

D(F)V160M
D(F)VE160M

08 191 04 02
2 (2)

/ ABB.
/ ADB.

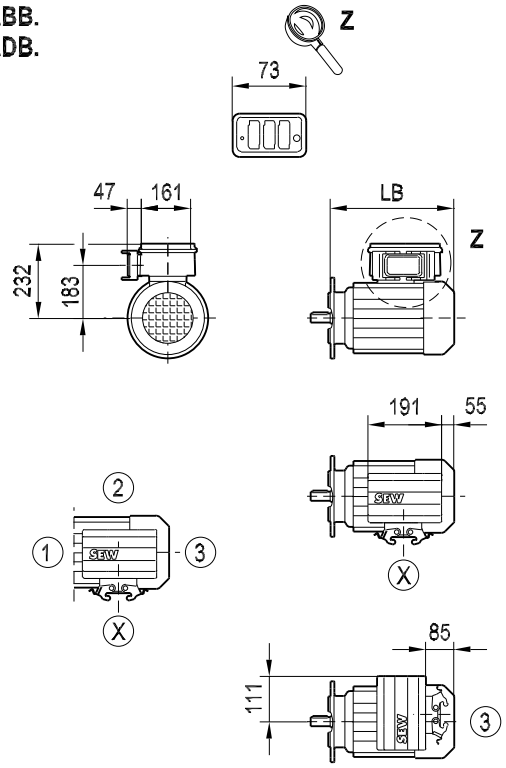

/ ABE.
/ ADE.

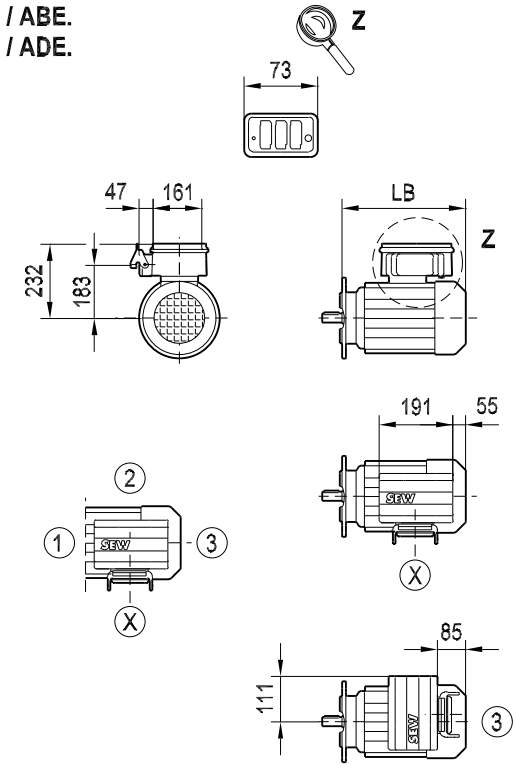

/ EV1.

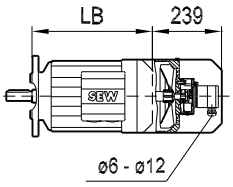

/ AV1.

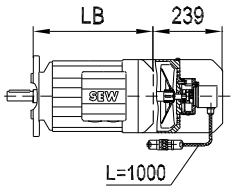

/ EV1A

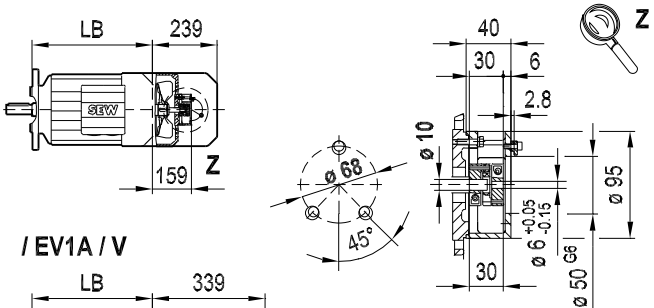

/ EV1A / V

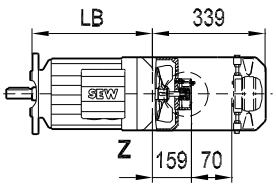

/ V	: ß = 90° ; X = 112
/ EV1. / V	: ß = 43° ; X = 339
/ AV1. / V	: ß = 43° ; X = 339

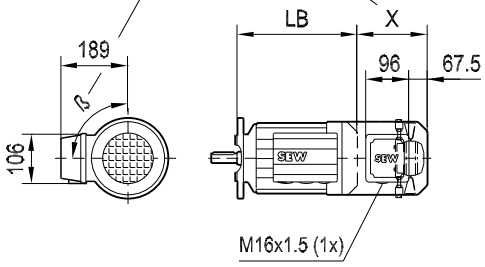

09 046 04 02

1 (2)

DV/DVE160M / BM
DV/DVE160M / RS

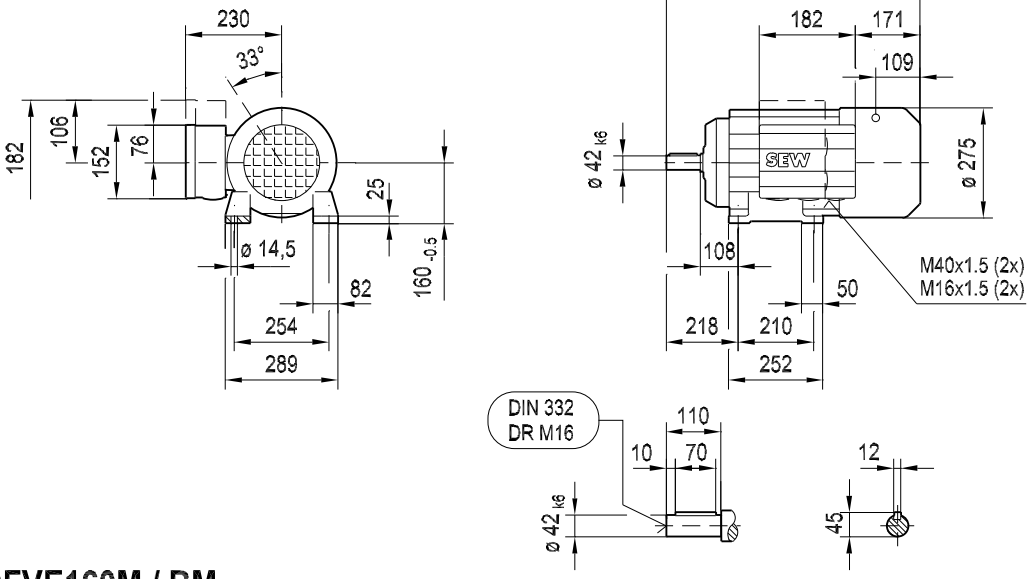

DFV/DFVE160M / BM
DFV/DFVE160M / RS

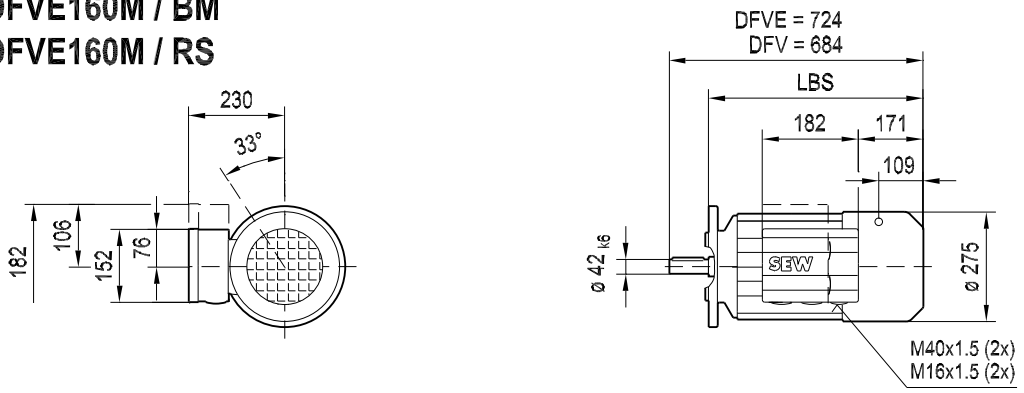

ø 300 (FF265)

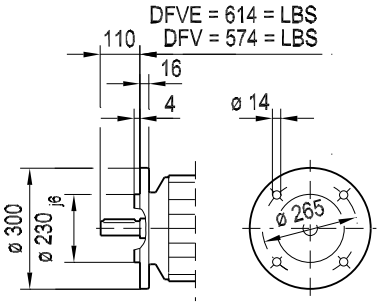

ø 350 IEC (FF300)

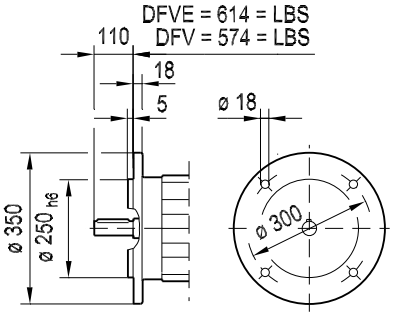

ø 450 (FF400)

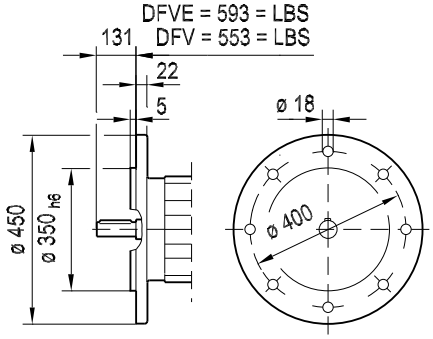

/ C

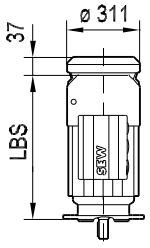

/ 2.WE

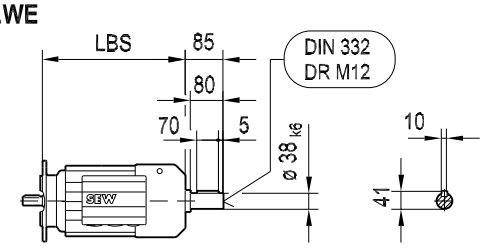

D(F)V160M / BM
D(F)VE160M / BM

09 046 04 02
2 (2)

/ ABB.
/ ADB.

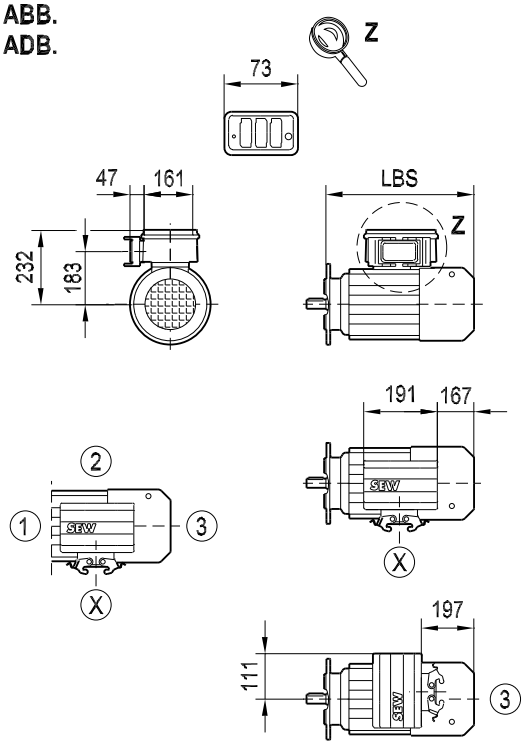

/ ABE.
/ ADE.

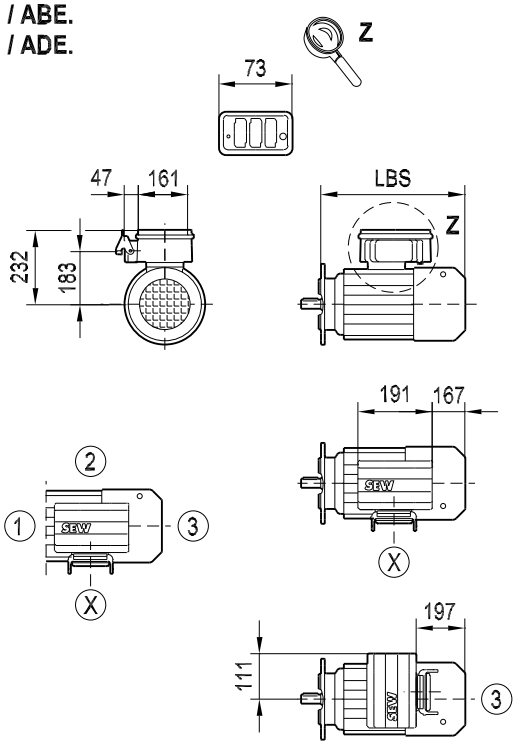

/ EV1.

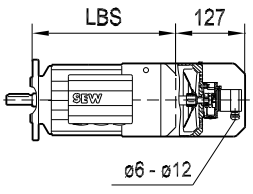

/ AV1.

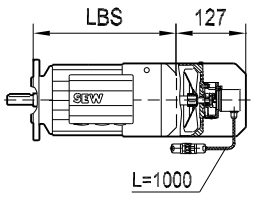

/ EV1A

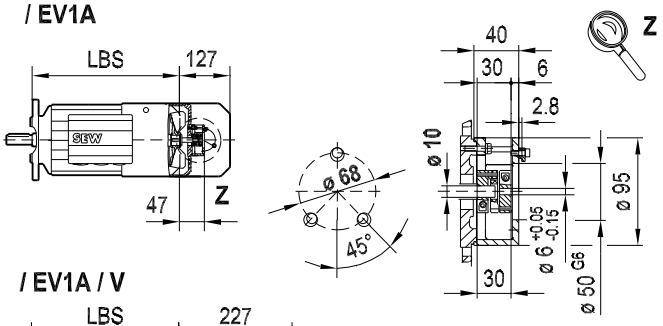

/ EV1A / V

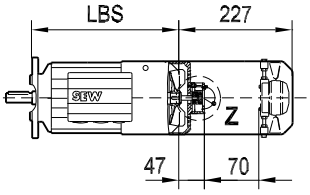

/ V : ß = 90° ; X = 123
/ EV1. / V : ß = 43° ; X = 227
/ AV1. / V : ß = 43° ; X = 227

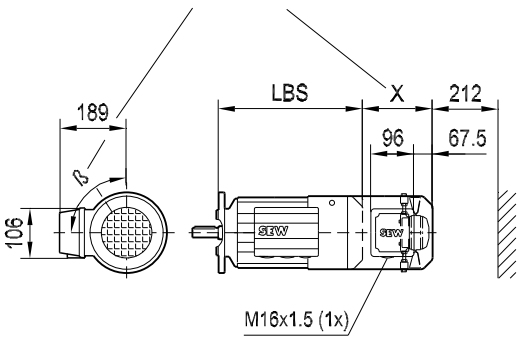

DV/DVE160L

08 192 04 02
1 (2)

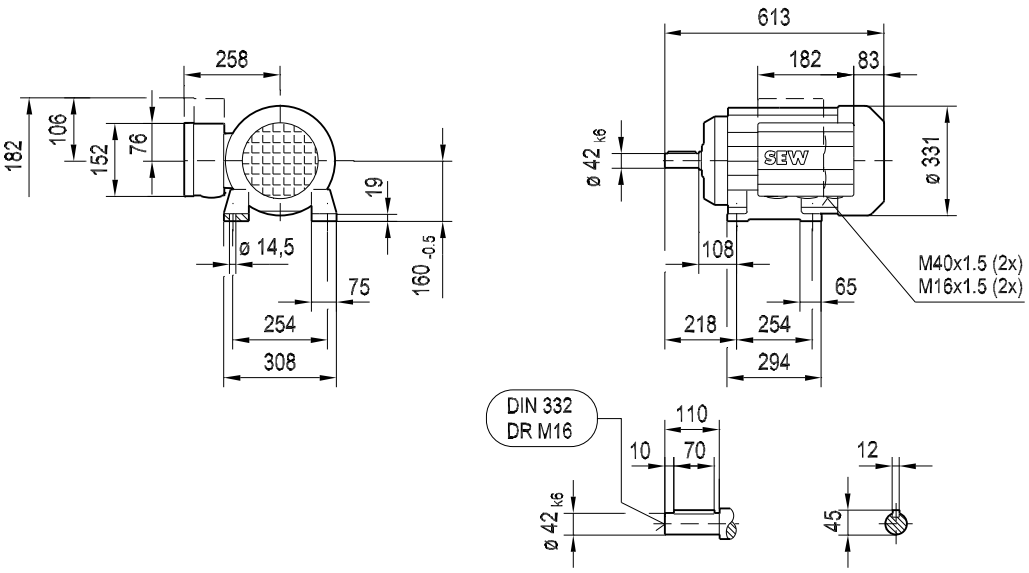

DFV/DFVE160L

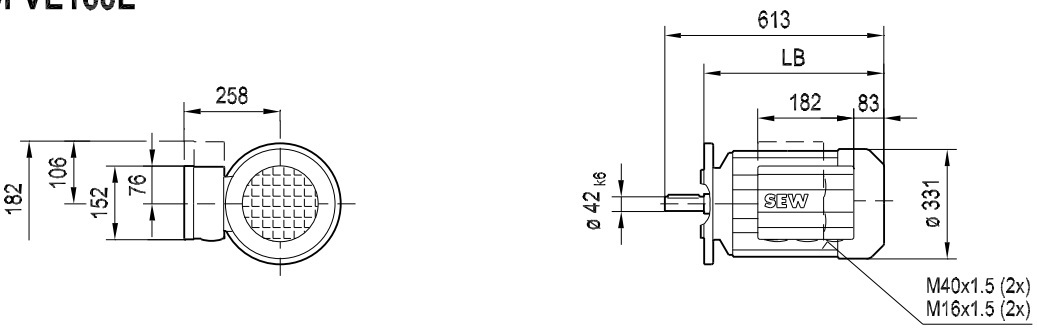

ø 300 (FF265)

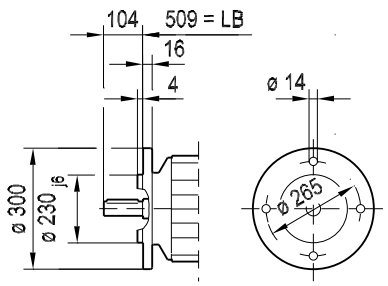

ø 350 IEC (FF300)

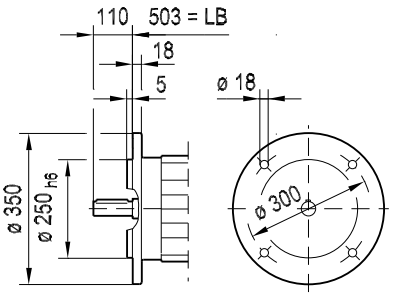

ø 450 (FF400)

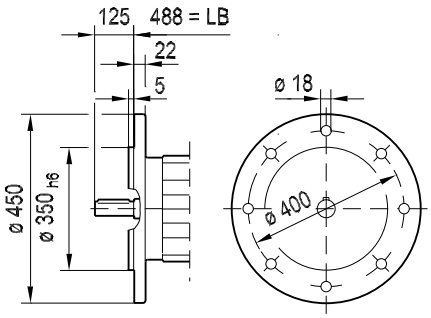

/ C

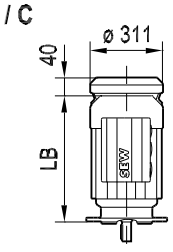

/ 2.WE

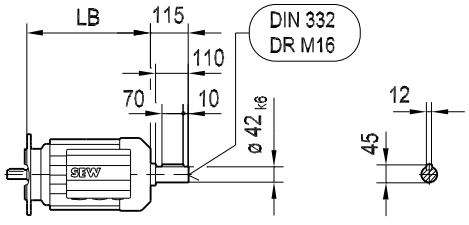

D(F)V160L
D(F)VE160L

08 192 04 02
2 (2)

/ ABB.
/ ADB.

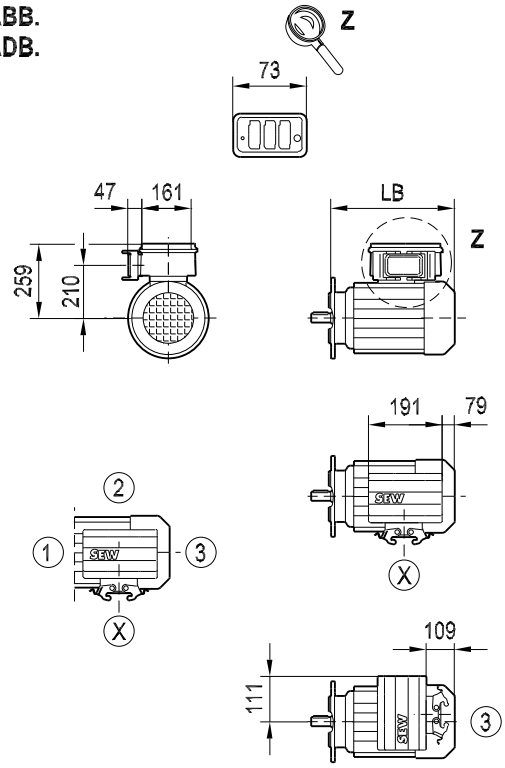

/ ABE.
/ ADE.

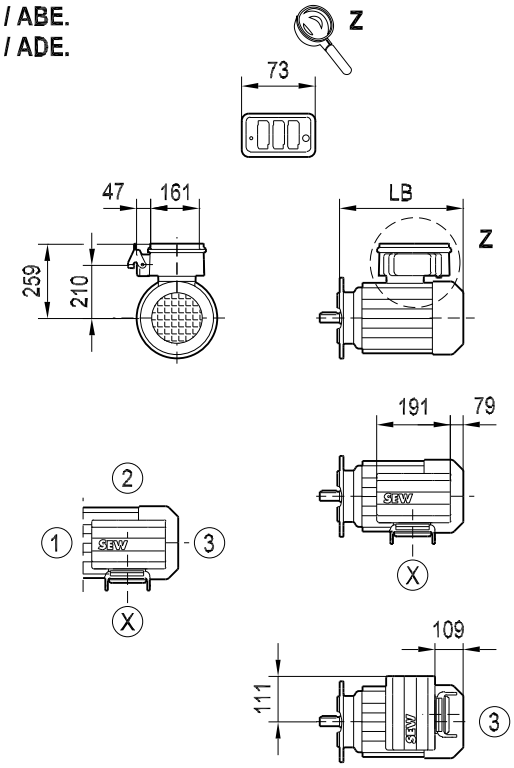

/ EV1.

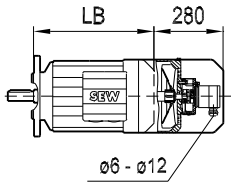

/ AV1.

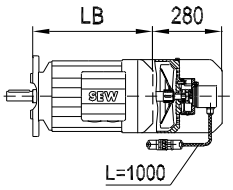

/ EV1A

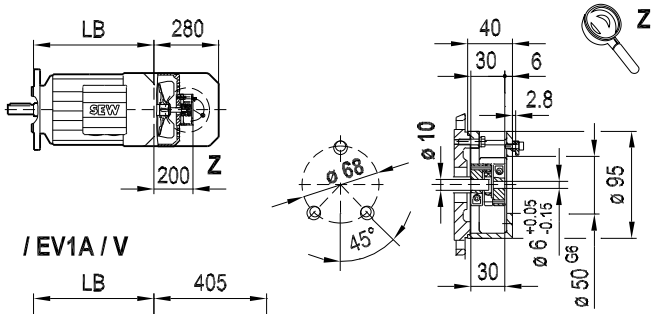

/ EV1A / V

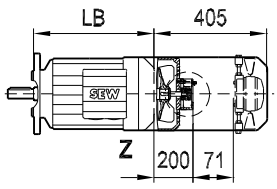

/ V	: X = 156
/ EV1. / V	: X = 405
/ AV1. / V	: X = 405

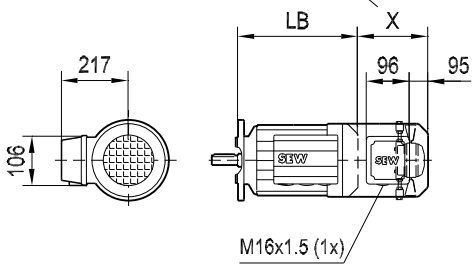

09 047 04 02
1 (2)

DV/DVE160L / BM
DV/DVE160L / RS

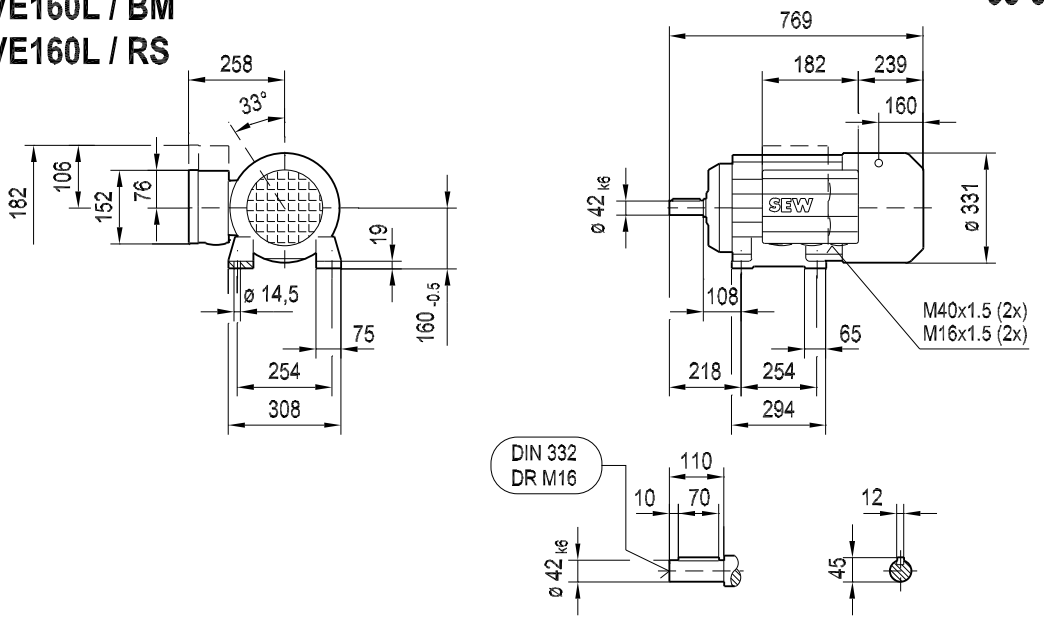

DFV/DFVE160L / BM
DFV/DFVE160L / RS

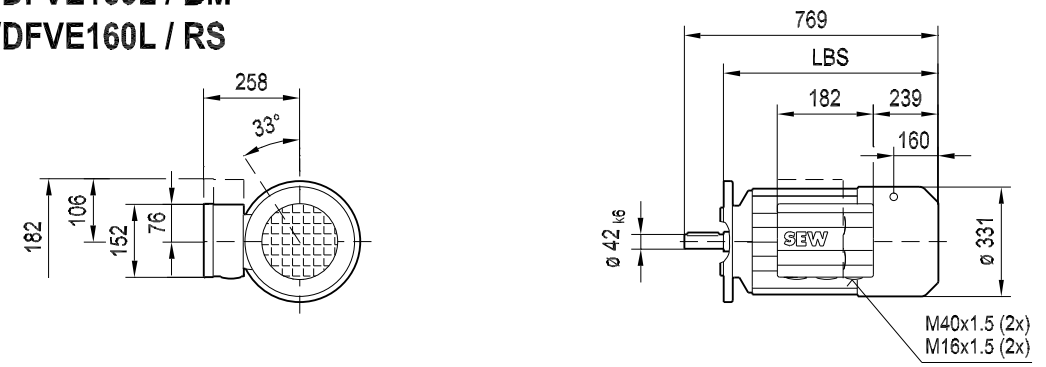

ø 300 (FF265)

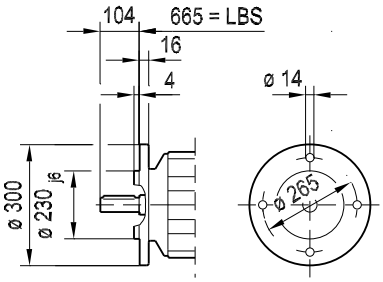

ø 350 IEC (FF300)

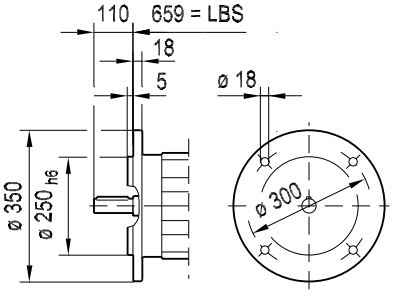

ø 450 (FF400)

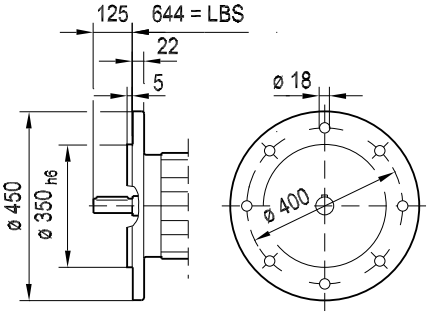

/ C

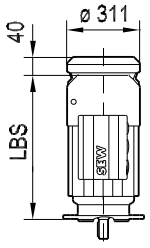

/ 2.WE

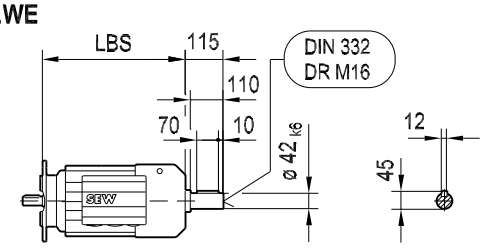

D(F)V160L / BM
D(F)VE160L / BM

09 047 04 02
2 (2)

/ ABB.
/ ADB.

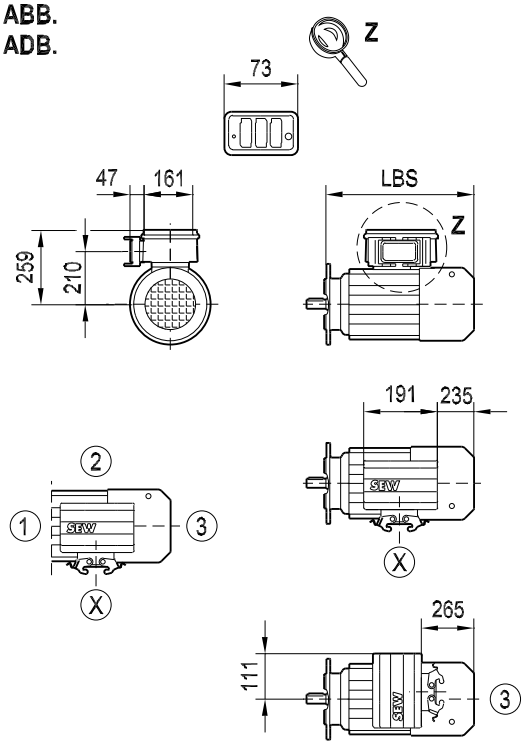

/ ABE.
/ ADE.

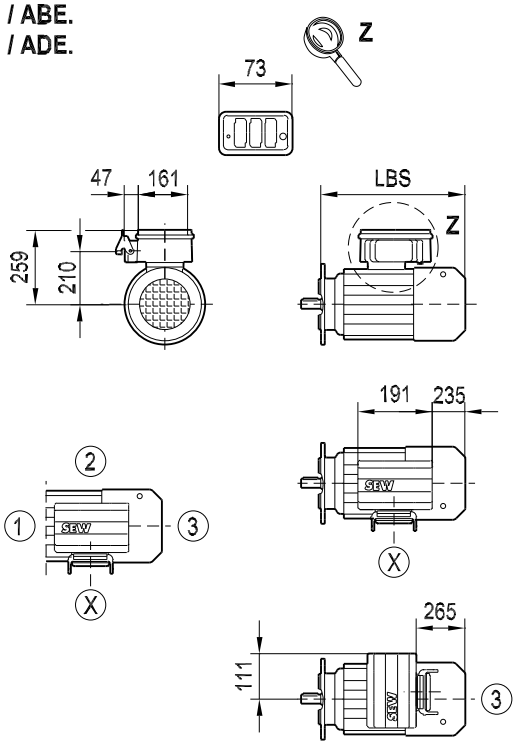

/ EV1.

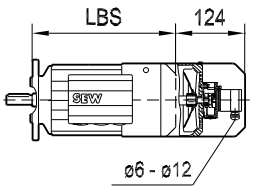

/ AV1.

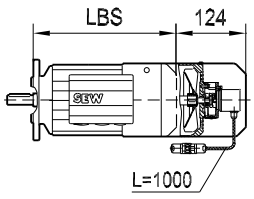

/ EV1A

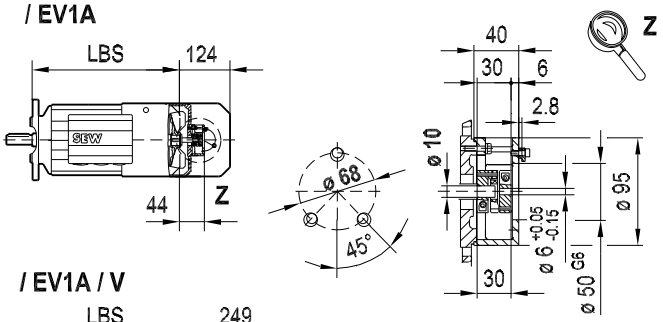

/ EV1A / V

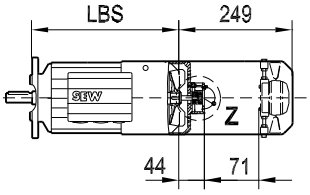

/ V	: X = 152
/ EV1. / V	: X = 249
/ AV1. / V	: X = 249

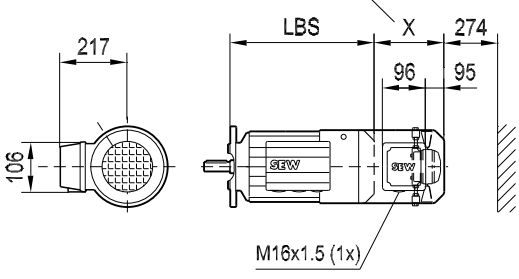

DV/DVE180

08 193 03 02
1 (2)

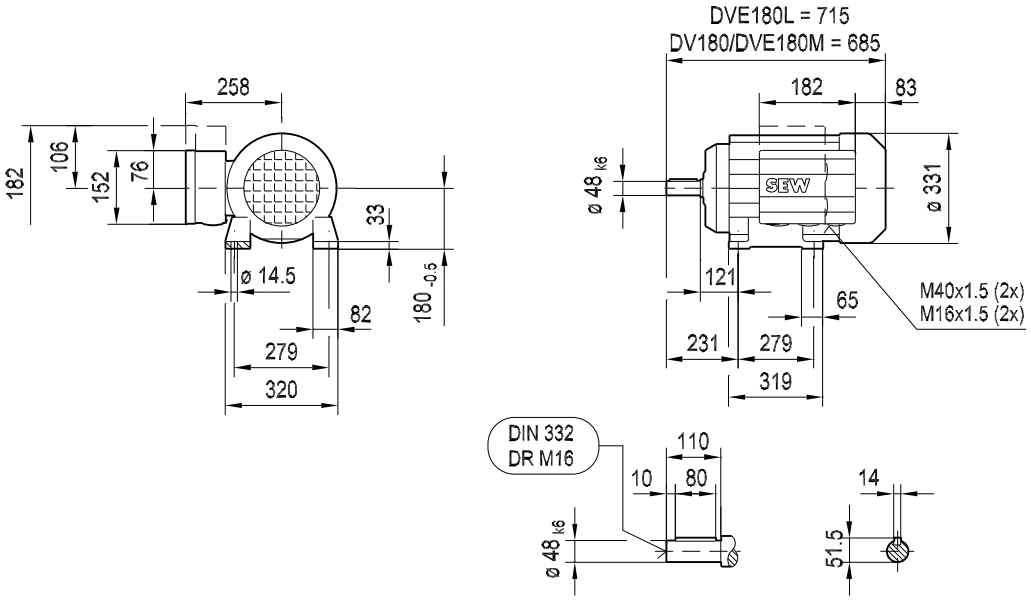

DFV/DFVE180

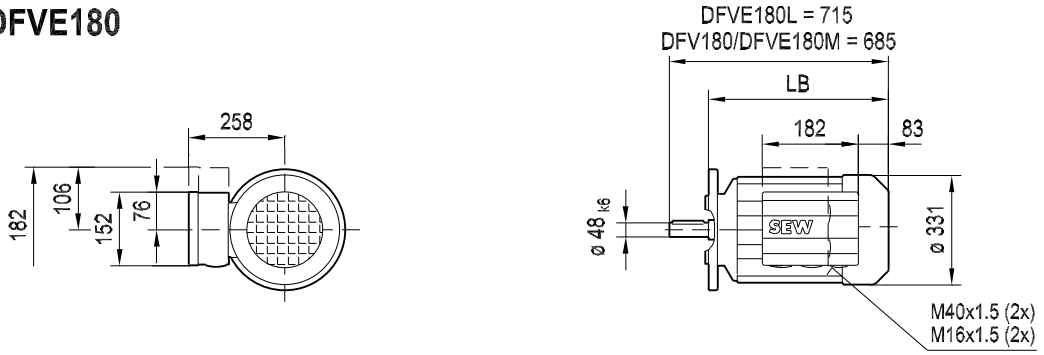

ø 300 (FF265)

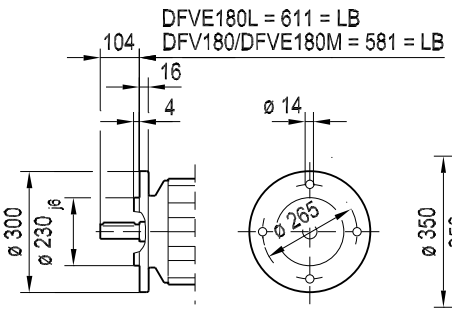

ø 350 IEC (FF300)

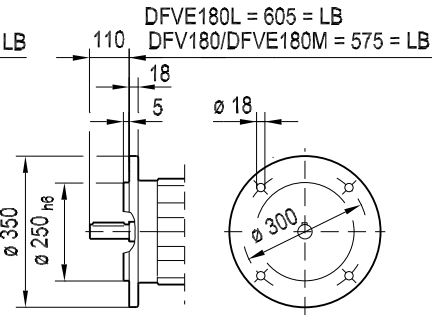

ø 450 (FF400)

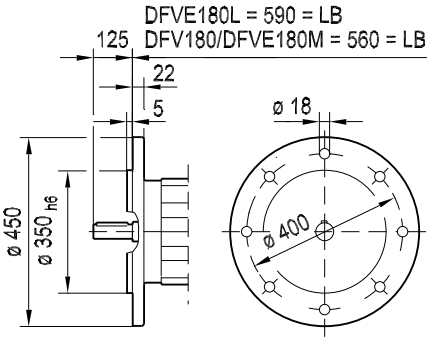

/ C

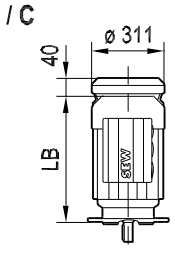

/ 2.WE

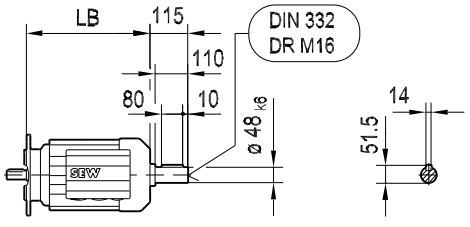

D(F)V180
D(F)VE180

08 193 03 02
2 (2)

/ ABB.
/ ADB.

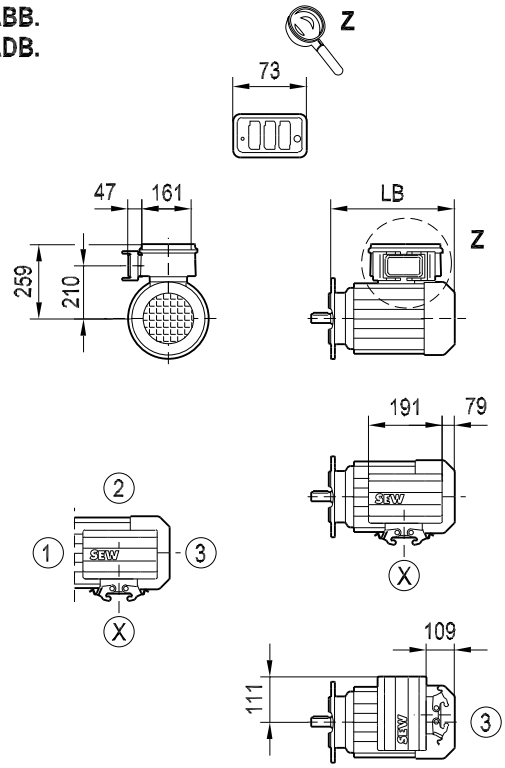

/ ABE.
/ ADE.

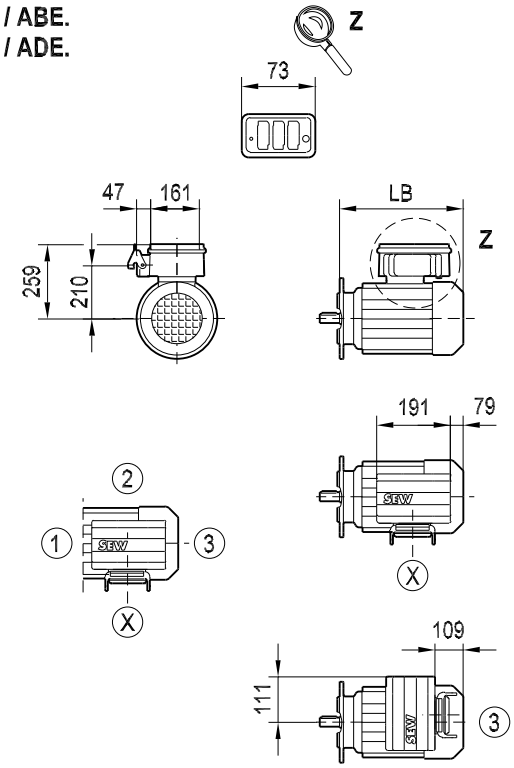

/ EV1.

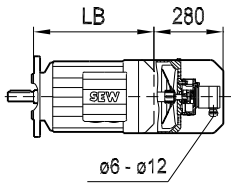

/ AV1.

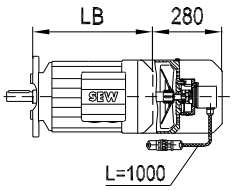

/ EV1A

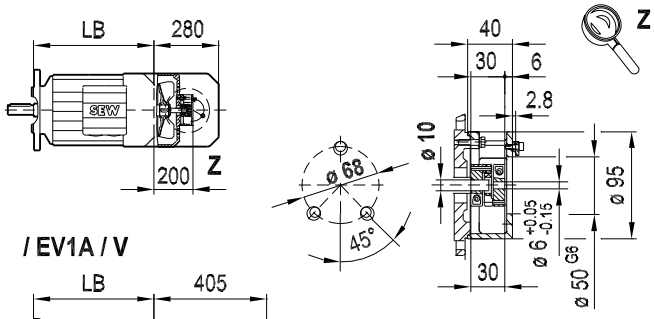

/ EV1A / V

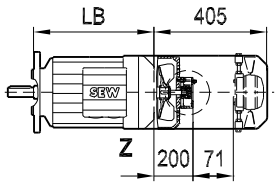

/ V	: X = 156
/ EV1. / V	: X = 405
/ AV1. / V	: X = 405

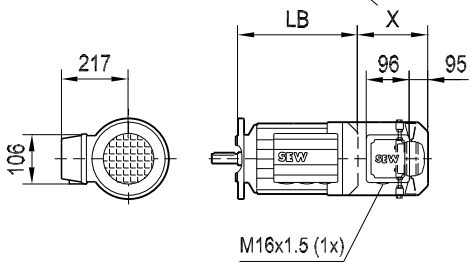

09 048 03 02
1 (2)

DV180 / BM / RS
DVE180 / BM / RS

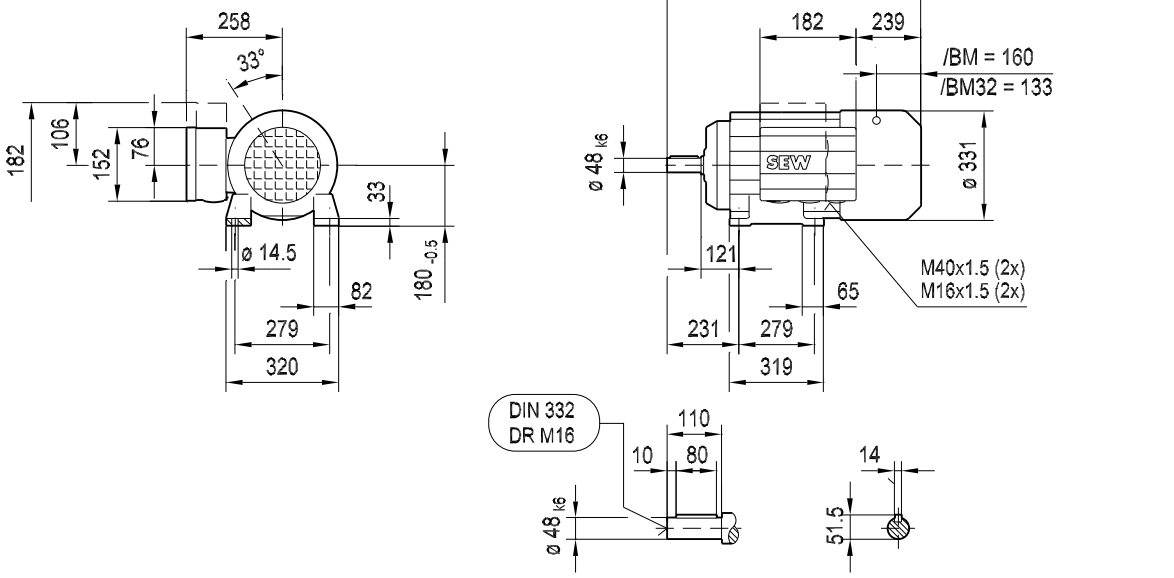

DFV180 / BM / RS
DFVE180 / BM / RS

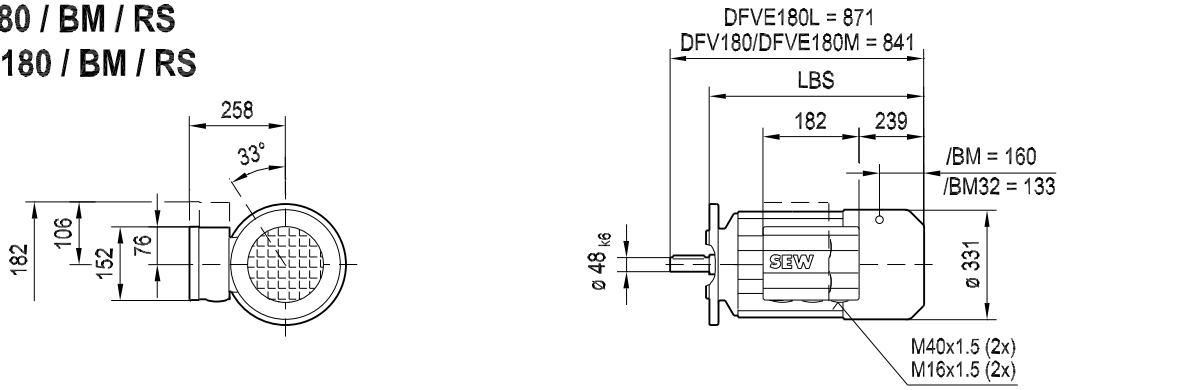

ø 300 (FF265)

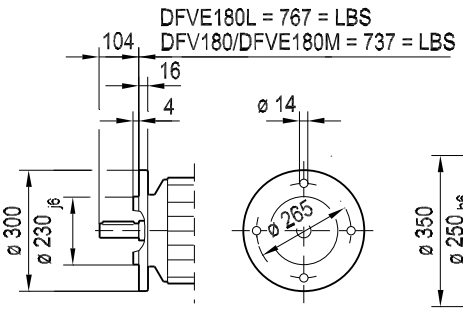

ø 350 IEC (FF300)

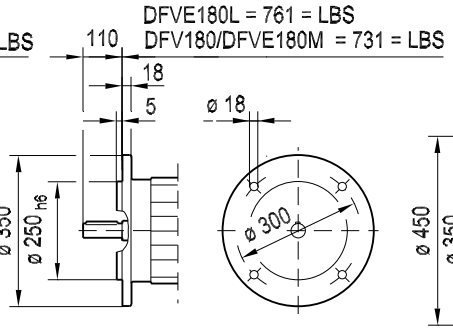

ø 450 (FF400)

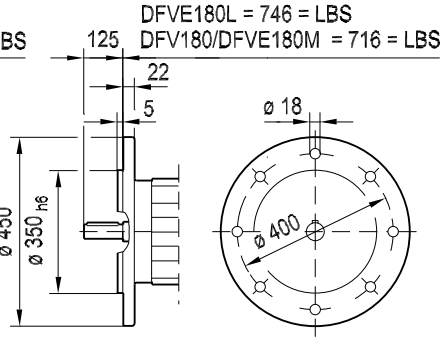

/ C

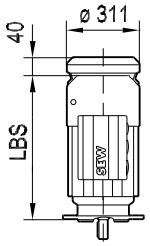

/ 2.WE

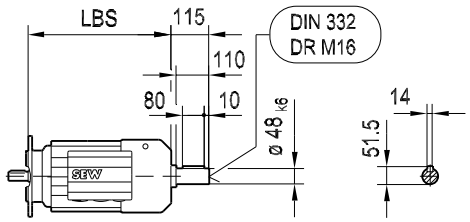

D(F)V180 / BM
D(F)VE180 / BM

09 048 03 02
2 (2)

/ ABB.
/ ADB.

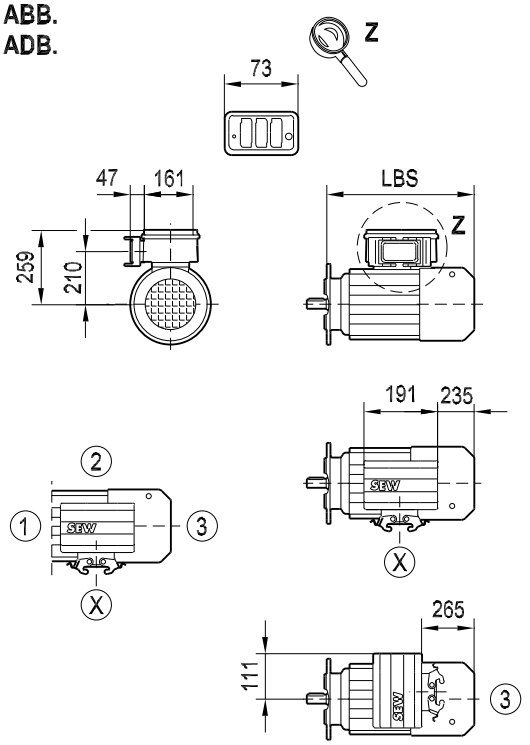

/ ABE.
/ ADE.

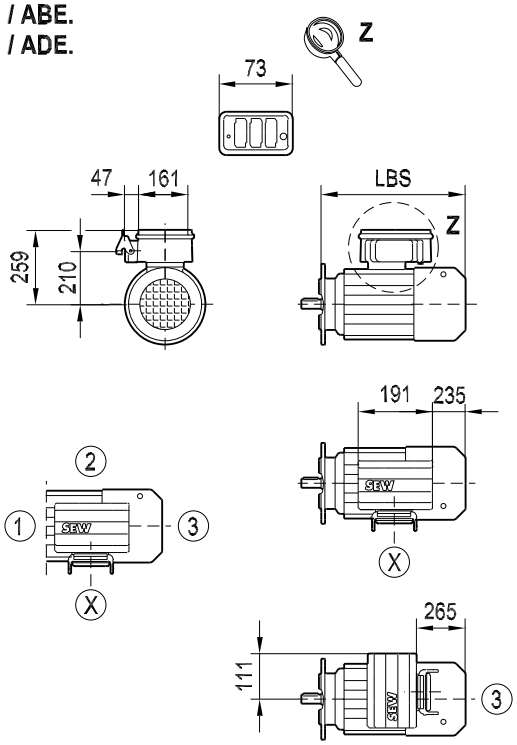

/ EV1.

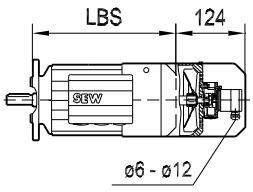

/ AV1.

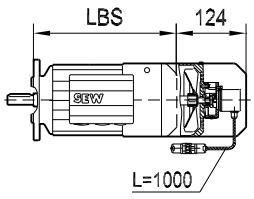

/ EV1A

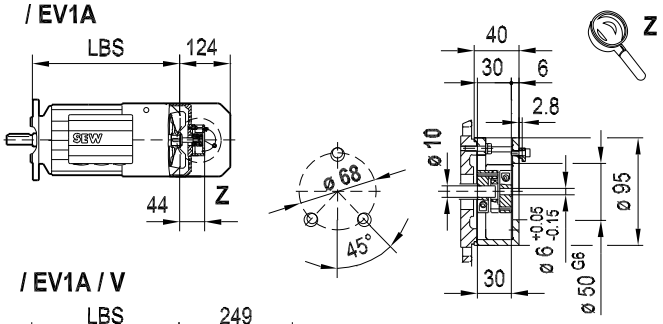

/ EV1A / V

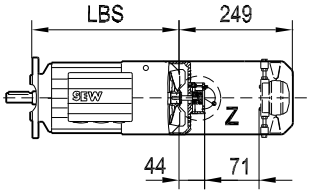

/ V	: X = 152
/ EV1. / V	: X = 249
/ AV1. / V	: X = 249

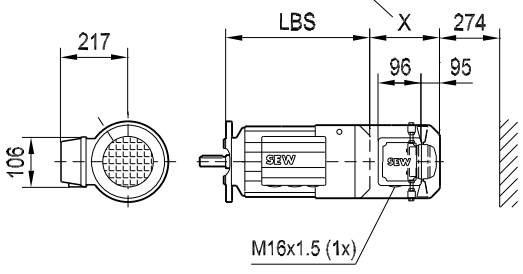

08 194 04 02
1 (2)

DV200
DVE200

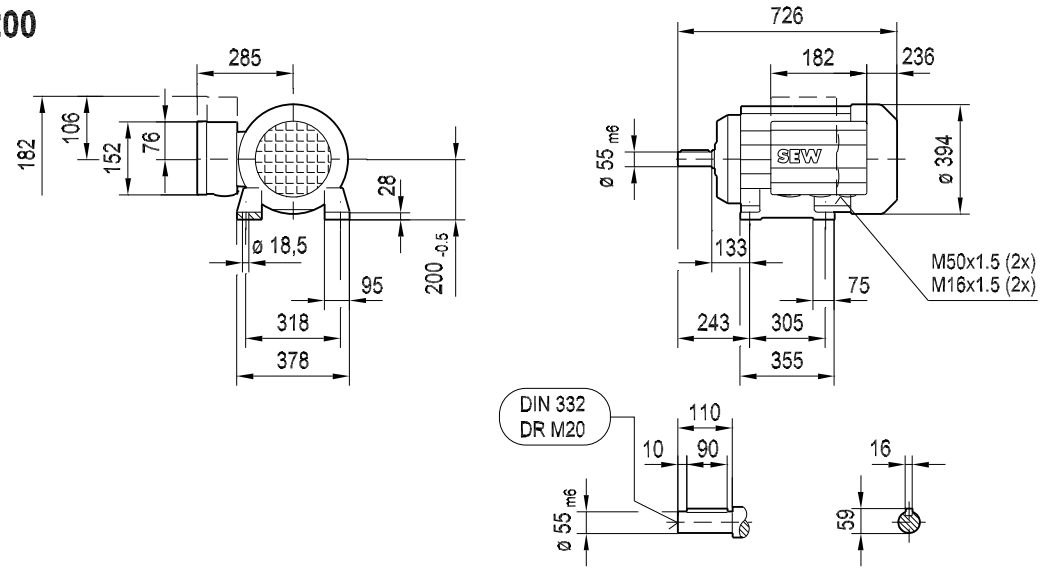

DFV200
DFVE200

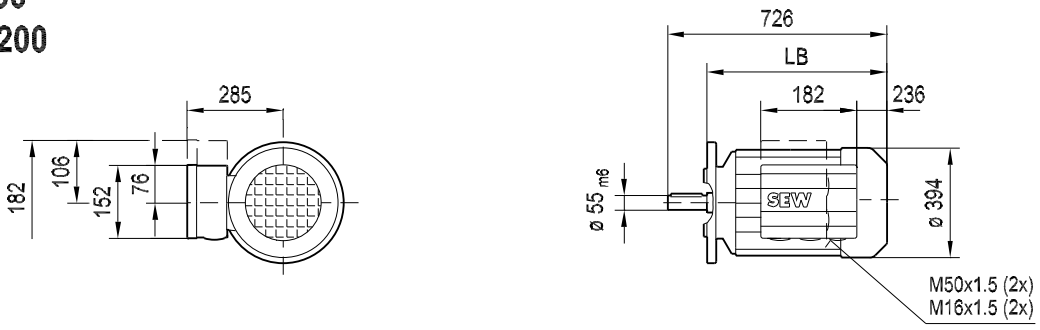

ø 400 IEC (FF350)

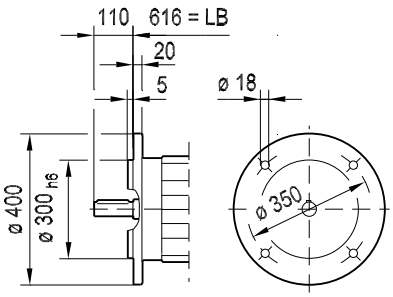

ø 450 (FF400)

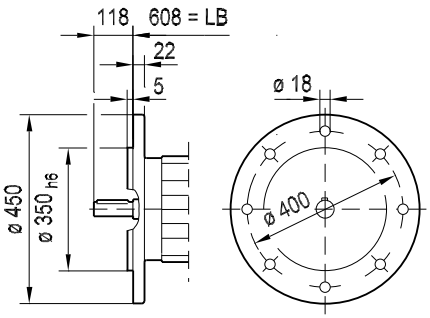

/ C

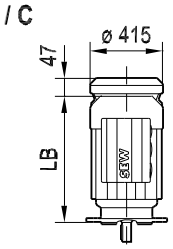

/ 2.WE

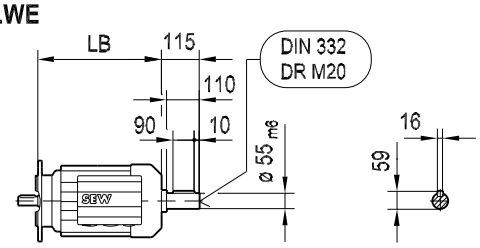

D(F)V200
D(F)VE200

08 194 04 02
2 (2)

/ EV1.

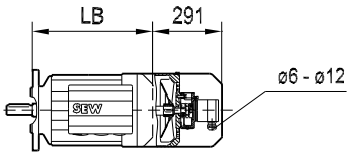

/ AV1.

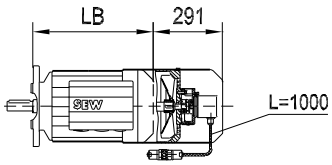

/ EV1A

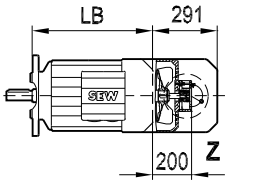

/ EV1A / V

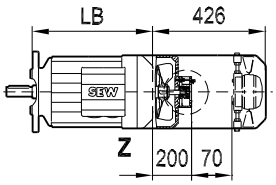

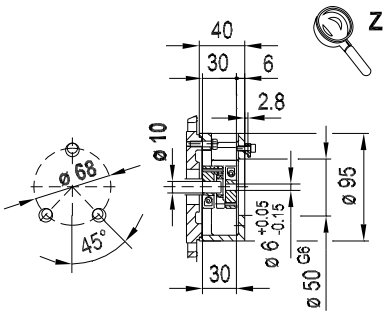

/ V : ß = 90° ; X = 167
/ EV1. / V : ß = 45° ; X = 426
/ AV1. / V : ß = 45° ; X = 426

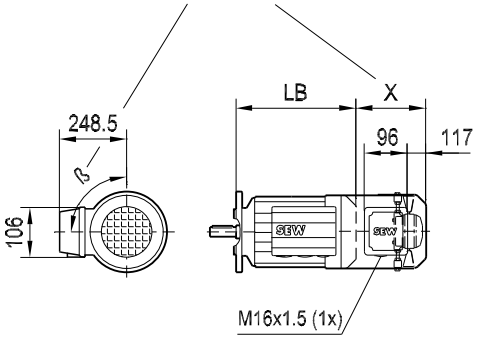

DV/DVE200 / BM
DV/DVE200 / RS

09 049 04 02
1 (2)

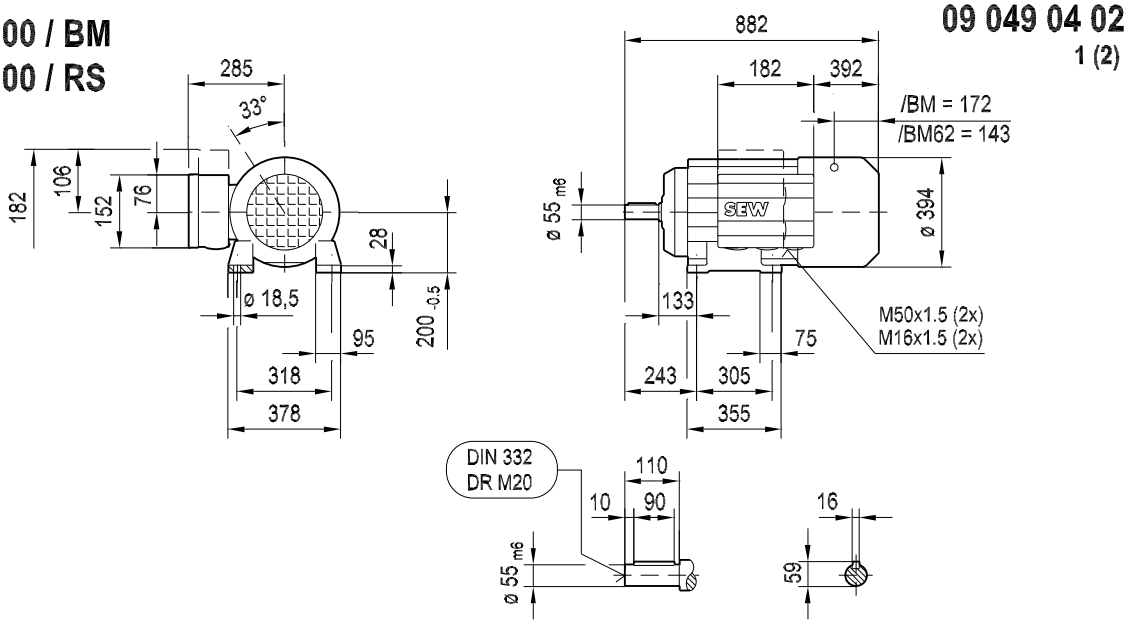

DFV/DFVE200 / BM
DFV/DFVE200 / RS

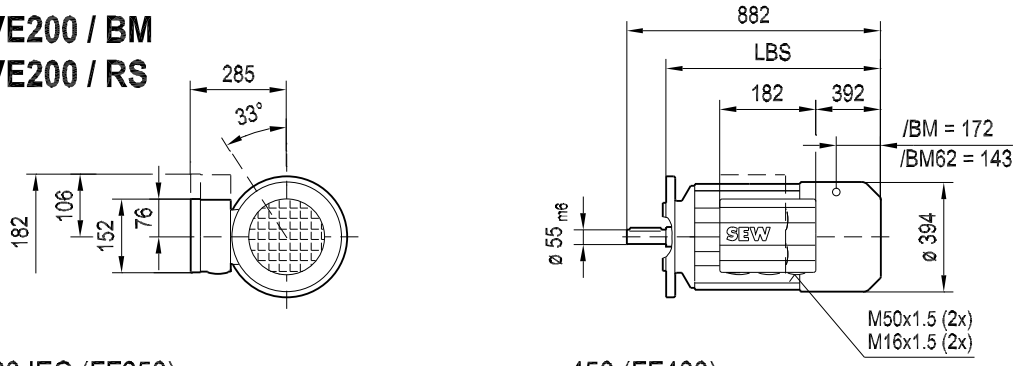

ø 400 IEC (FF350)

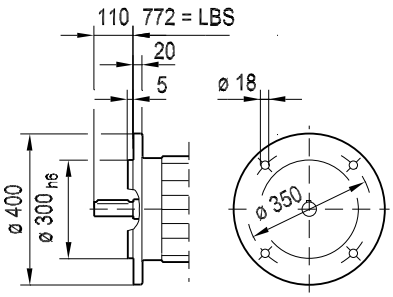

ø 450 (FF400)

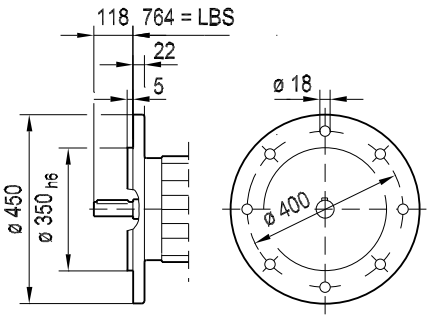

/ C

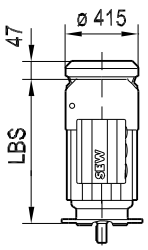

/ 2.WE

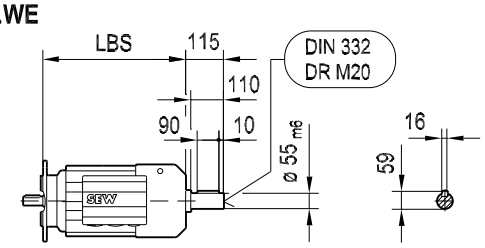

D(F)V200 / BM
D(F)VE200 / BM

09 049 04 02
2 (2)

/ EV1.

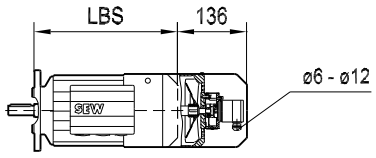

/ AV1.

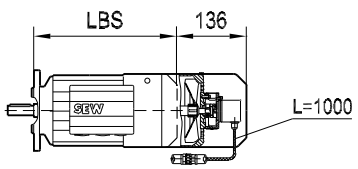

/ EV1A

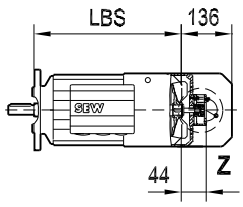

/ EV1A / V

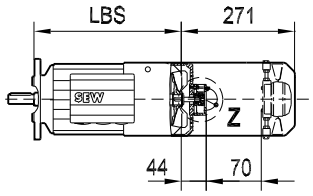

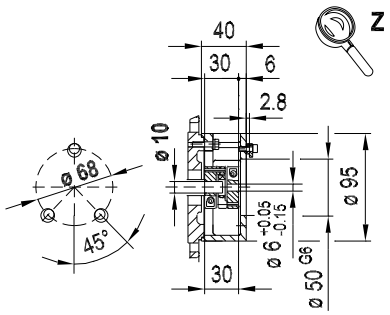

/ V : ß = 90° ; X = 180
/ EV1. / V : ß = 45° ; X = 271
/ AV1. / V : ß = 45° ; X = 271

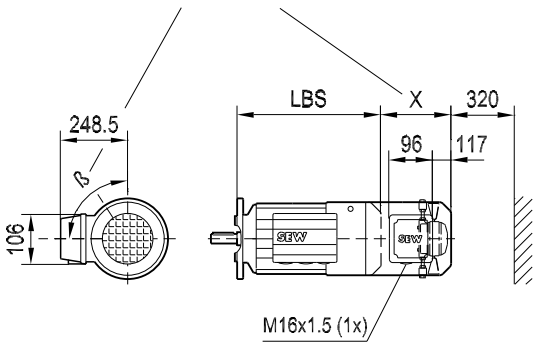

08 195 04 02
1 (2)

DV225
DVE225

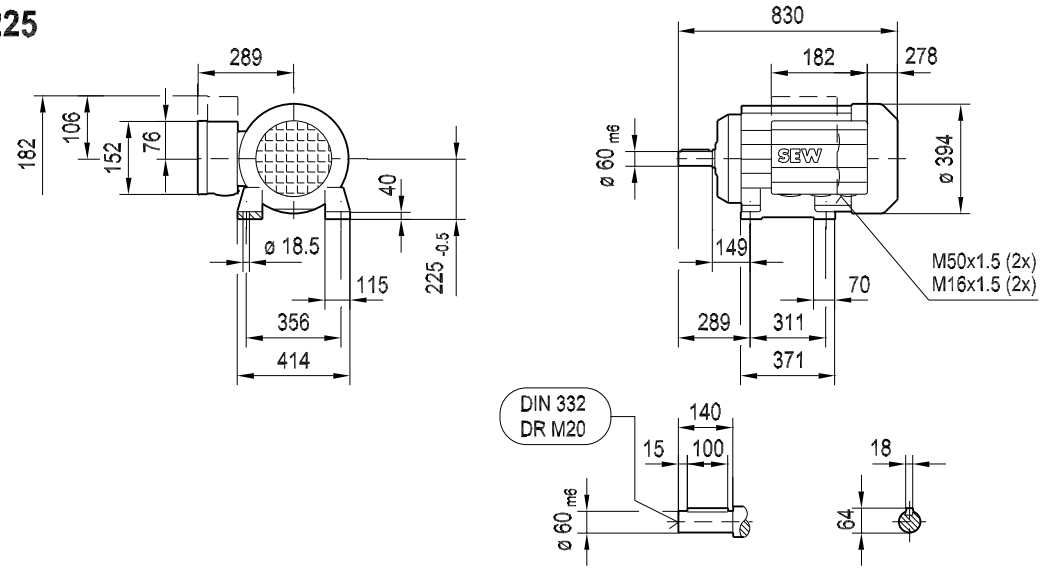

DFV225
DFVE225

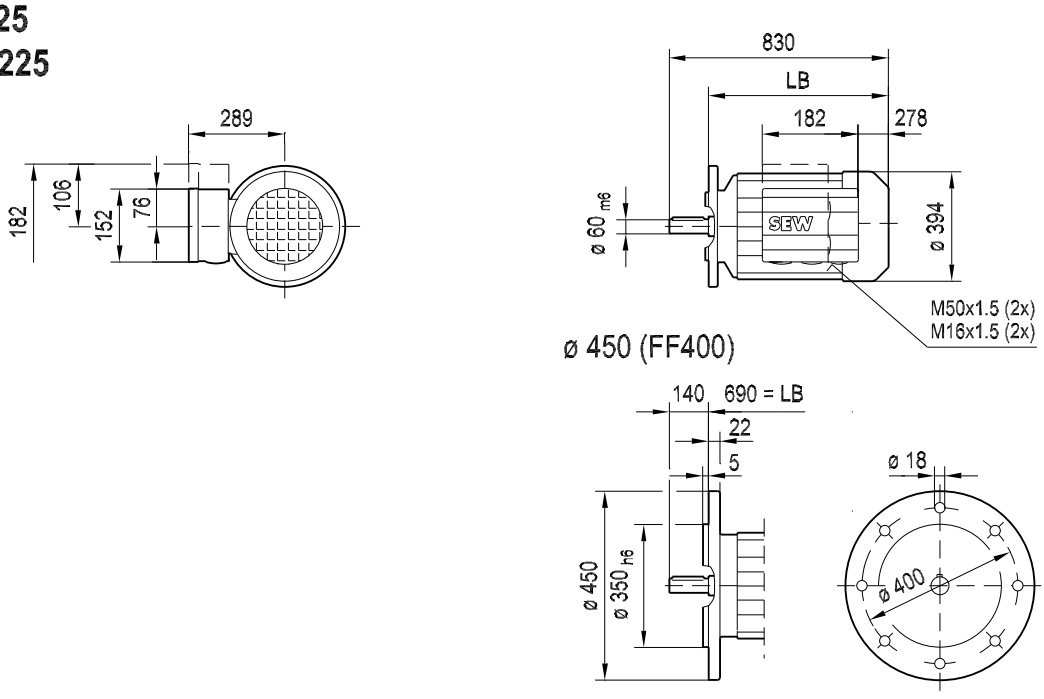

/ C

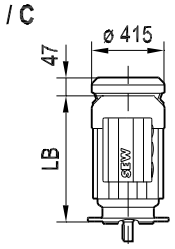

/ 2.WE

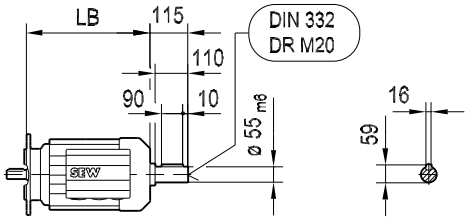

D(F)V225
D(F)VE225

08 195 04 02
2 (2)

/ EV1.

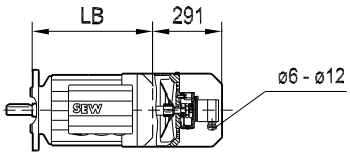

/ AV1.

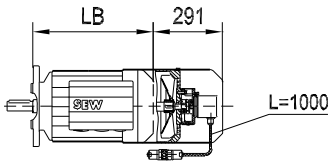

/ EV1A

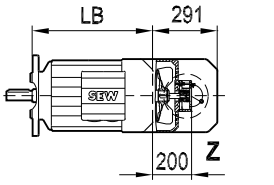

/ EV1A / V

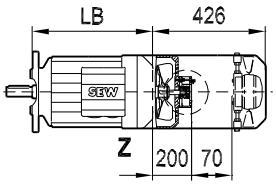

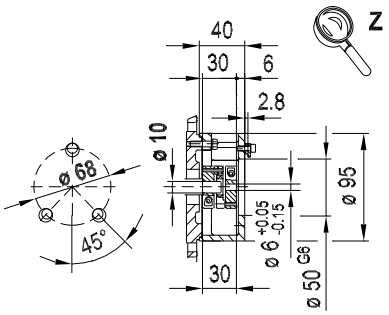

/ V : ß = 90° ; X = 167
/ EV1. / V : ß = 45° ; X = 426
/ AV1. / V : ß = 45° ; X = 426

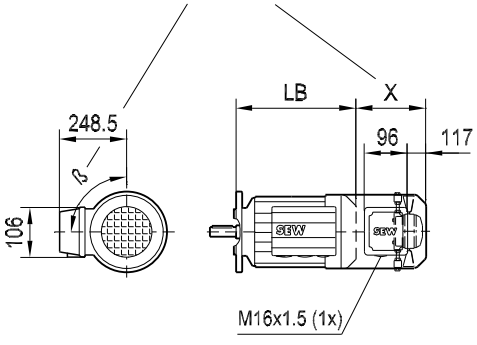

DV225 / BM / RS
DVE225 / BM / RS

09 050 04 02
1 (2)

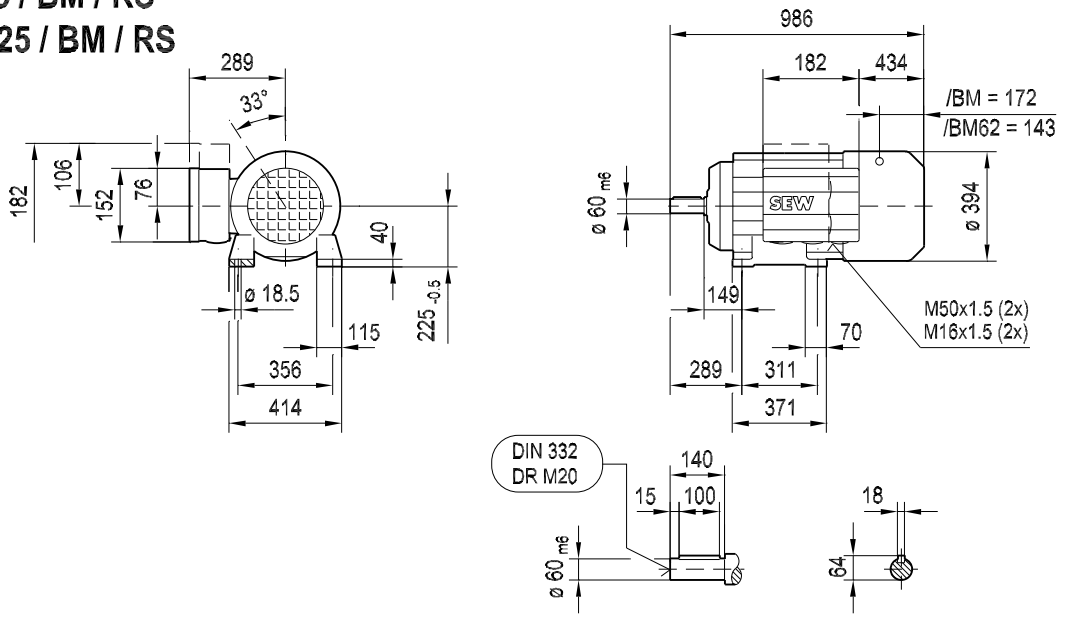

DFV225 / BM / RS
DFVE225 / BM / RS

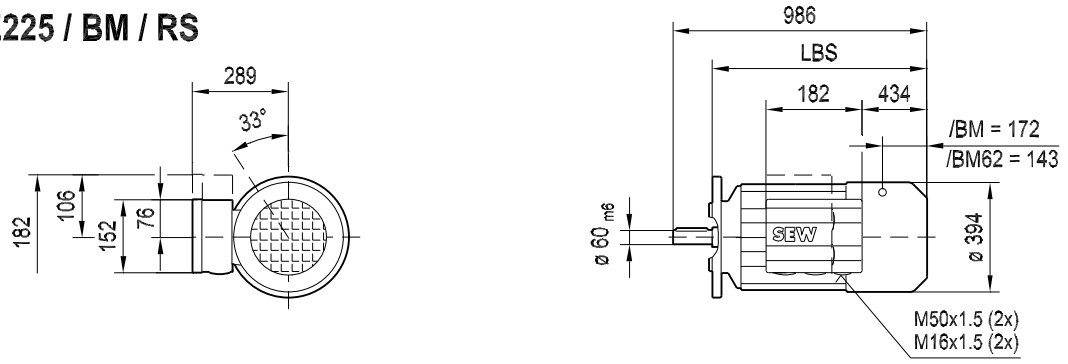

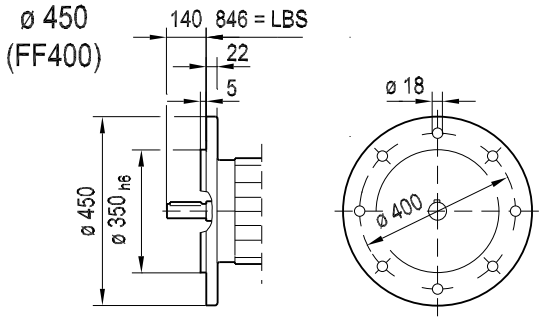

/ C

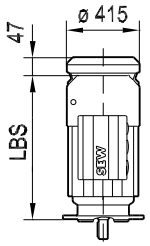

/ 2.WE

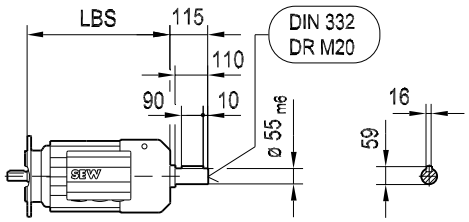

D(F)V225 / BM
D(F)VE225 / BM

09 050 04 02
2 (2)

/ EV1.

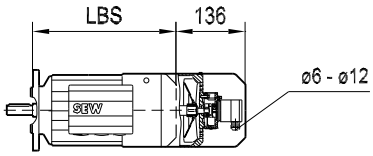

/ AV1.

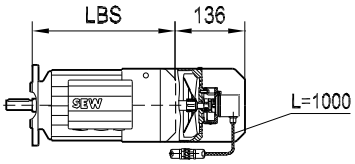

/ EV1A

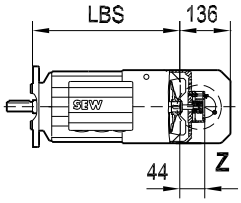

/ EV1A / V

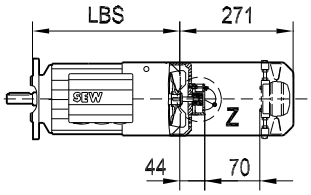

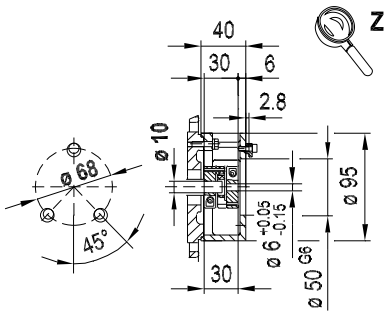

/ V : ß = 90° ; X = 180
/ EV1. / V : ß = 45° ; X = 271
/ AV1. / V : ß = 45° ; X = 271

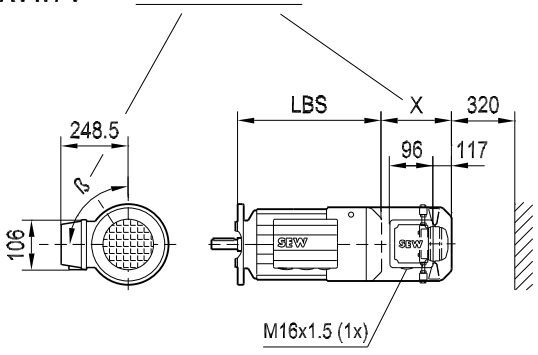

08 196 03 02
1 (1)

DV/DVE250M
DV/DVE280

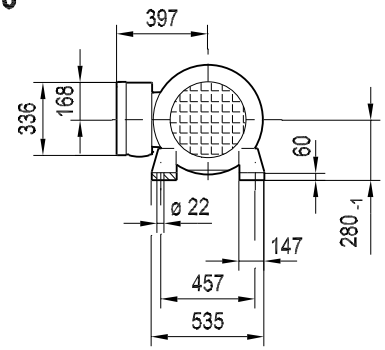

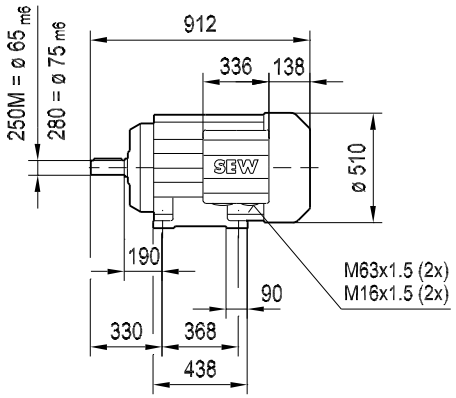

D..250M

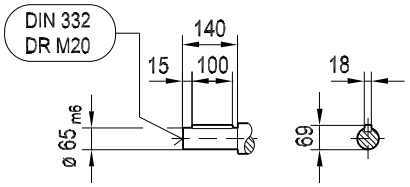

D..280

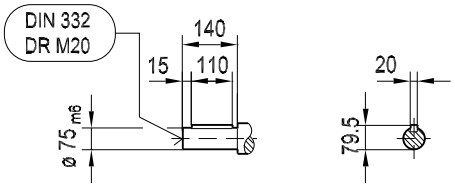

DFV/DFVE250M
DFV/DFVE280

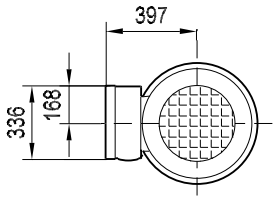

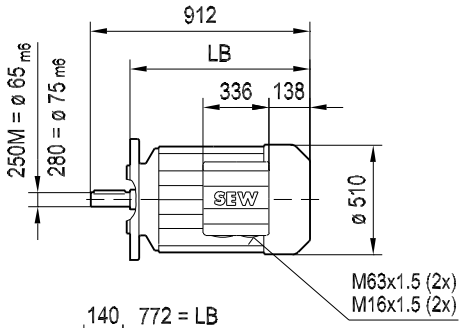

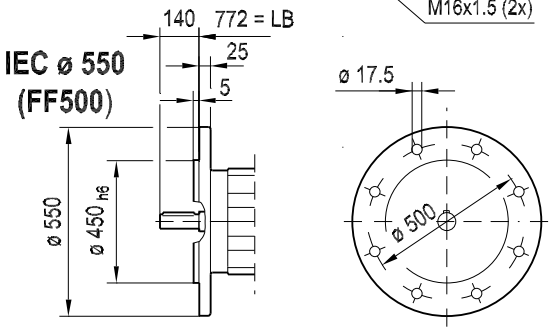

/ V
/ EV1. / V
/ AV1. / V

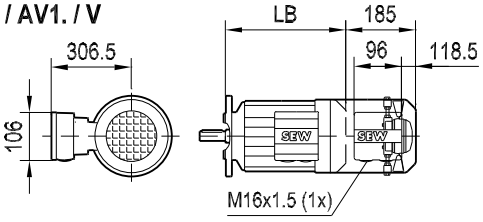

/ C

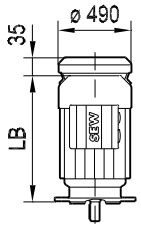

/ 2.WE

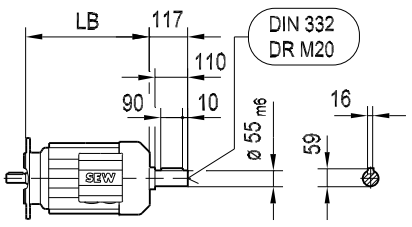

DV/DVE250M / BMG
DV/DVE280 / BMG
DV.. / RS

09 051 04 02
1 (1)

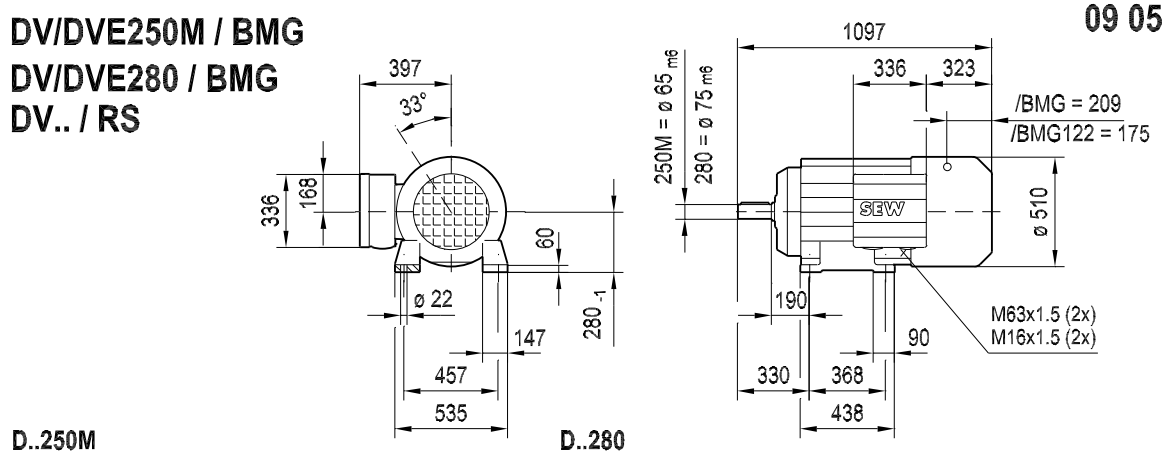

D..250M

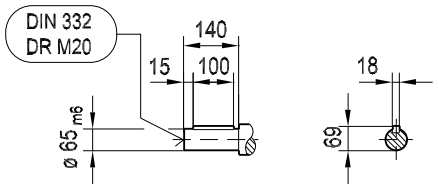

D..280

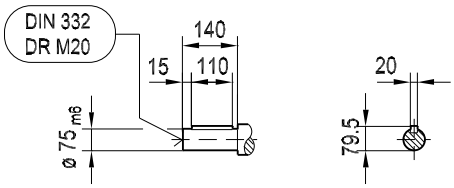

DFV/DFVE250M / BMG
DFV/DFVE280 / BMG
DV.. / RS

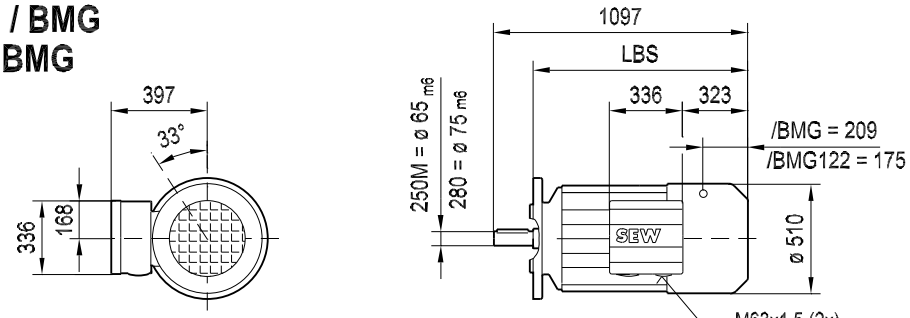

IEC ø 550 (FF500)

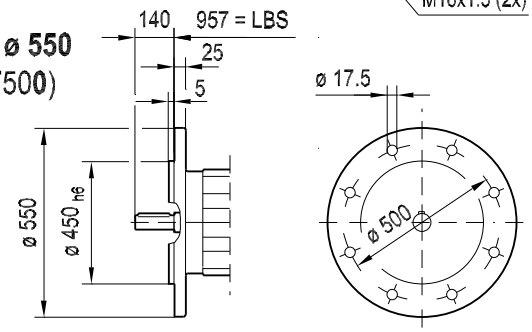

/ V
/ EV1. / V
/ AV1. / V

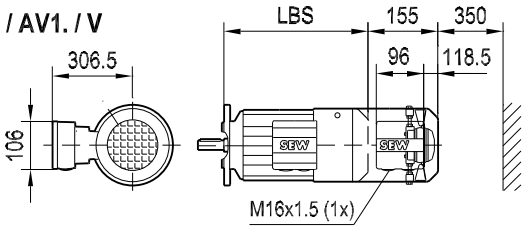

/ C

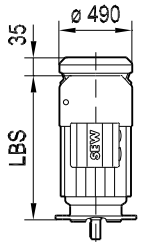

/ 2.WE

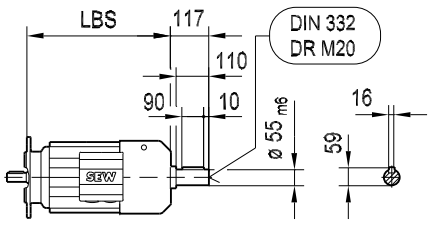

8.12 Dimension sheets for AC motors with MOVI-SWITCH® option [mm]

MSW-1E

08 228 01 03
1 (2)

D(F)T71-80..

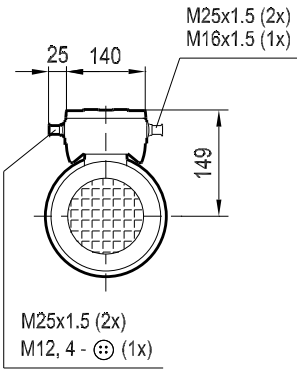

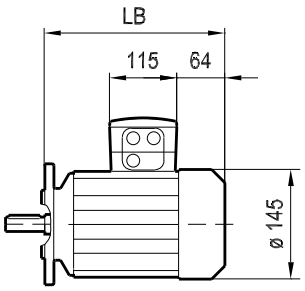

D(F)T71-80..BMG

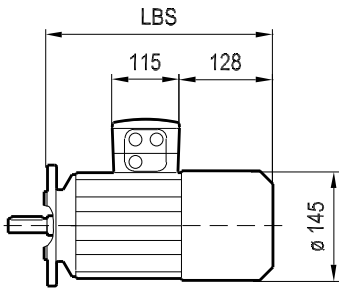

D(F)T90..

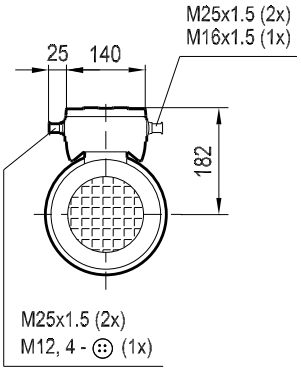

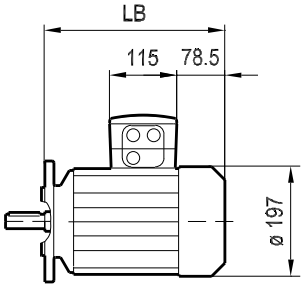

D(F)T90..BMG

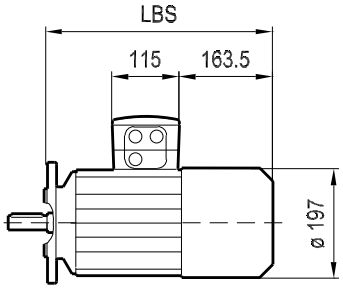

D(F)V100..

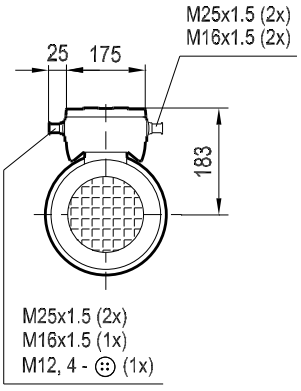

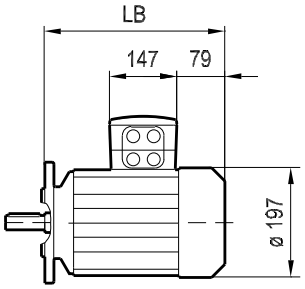

D(F)V100..BMG

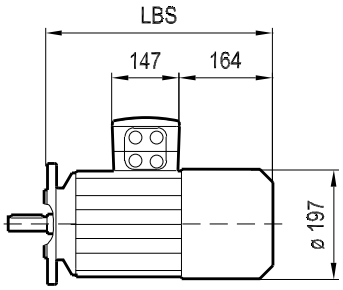

MSW-2S

08 228 01 03
2 (2)

D(F)T71-80..

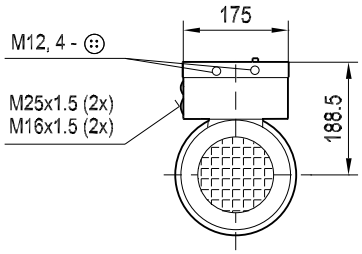

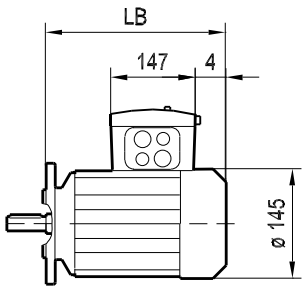

D(F)T71-80..BMG

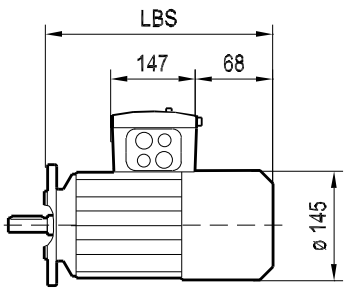

D(F)T90..

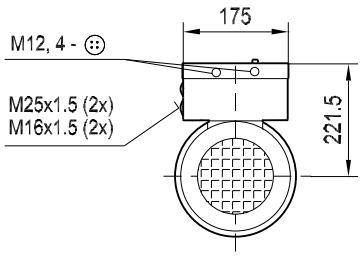

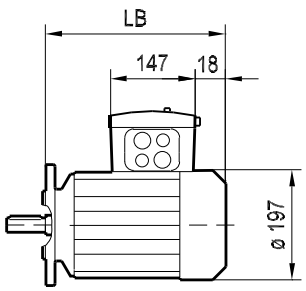

D(F)T90..BMG

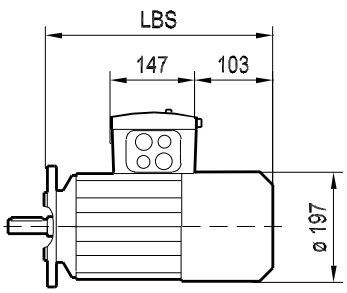

D(F)V100..

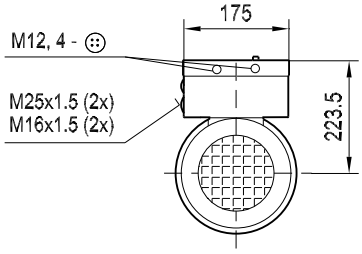

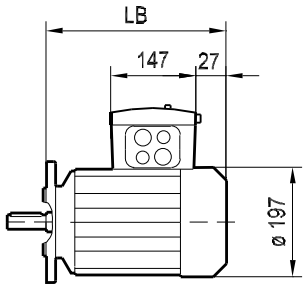

D(F)V100..BMG

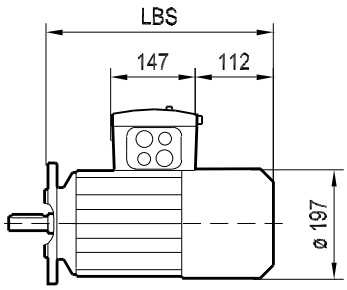

8.13 Dimension sheet for carrier plate for ASK1 [mm]

Dimension drawing of carrier plate option

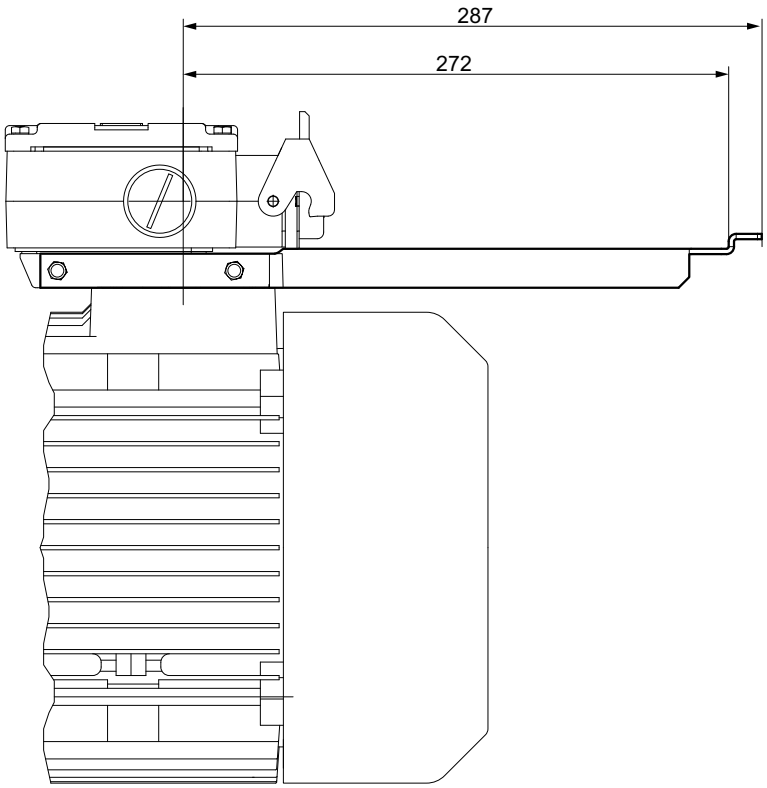

51739AXX

8.14 Dimension sheets for smooth pole-change unit WPU [mm]

WPU 1001, 1003, 1010

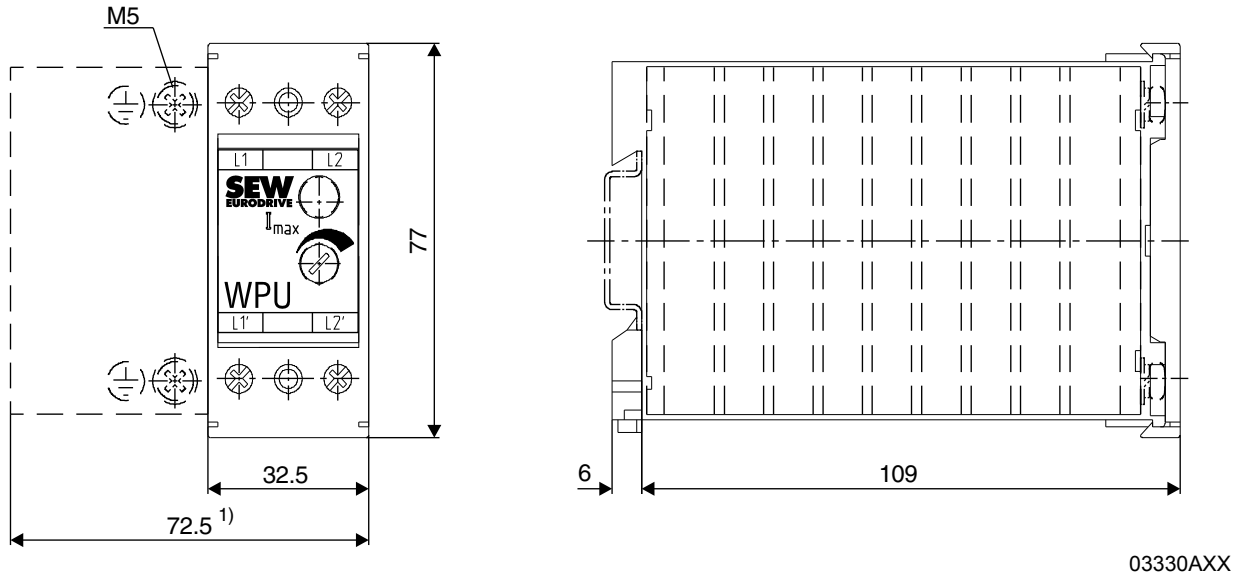

03330AXX

1) Heat sink for WPU 1010 only

WPU 2030

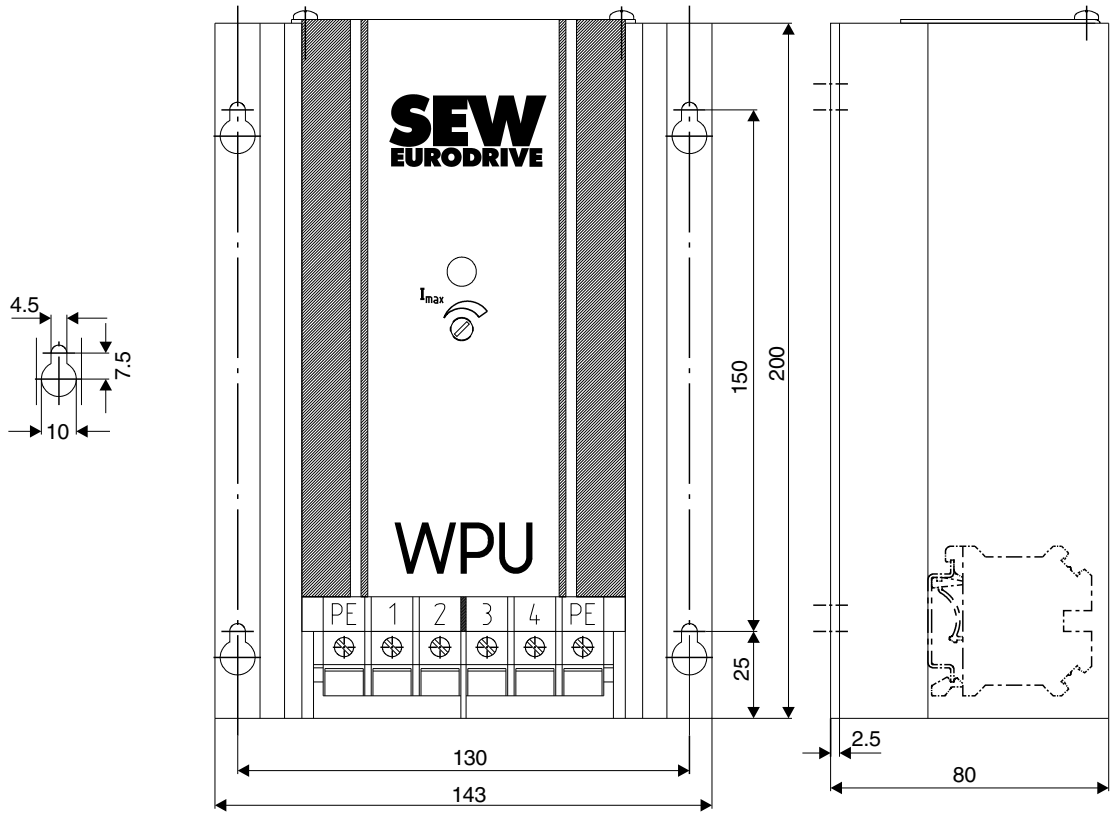

03331AXX

8.15 Dimension sheets for brake controllers BG.., BM.., BS.., SR, UR [mm]

BG1.0, BGE1

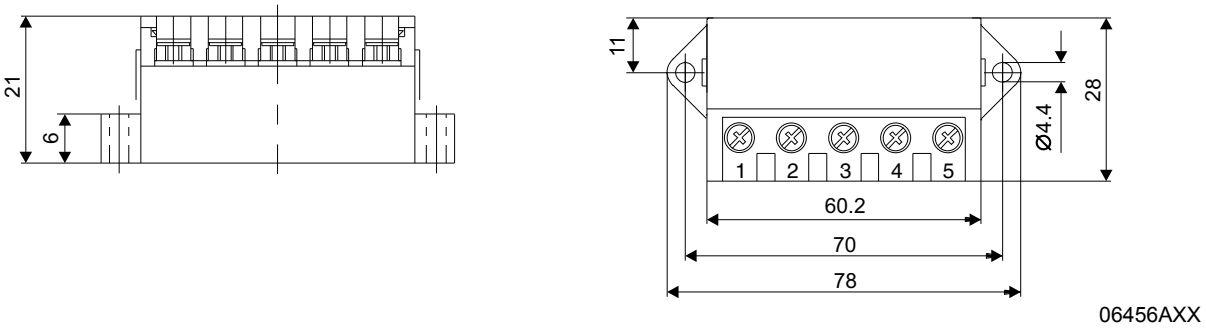

BG1.2, BG2.4

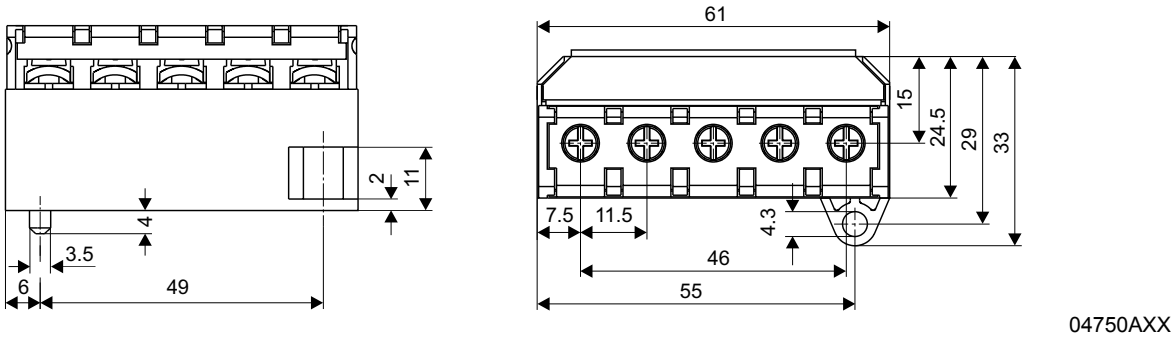

BG1.5, BG3, BGE, BS, BSG

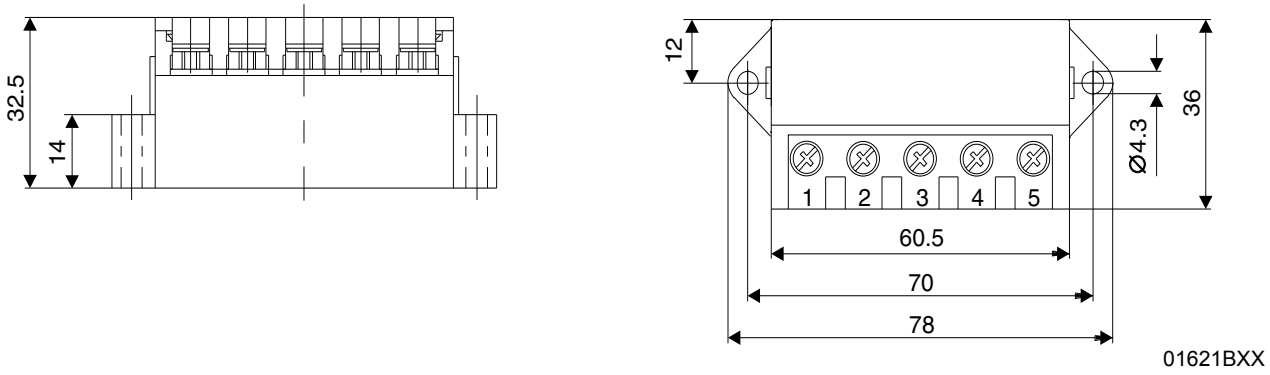

Auxiliary terminal strip For connection of the brake coil or TF/TH and strip heaters in the wiring space of the motor

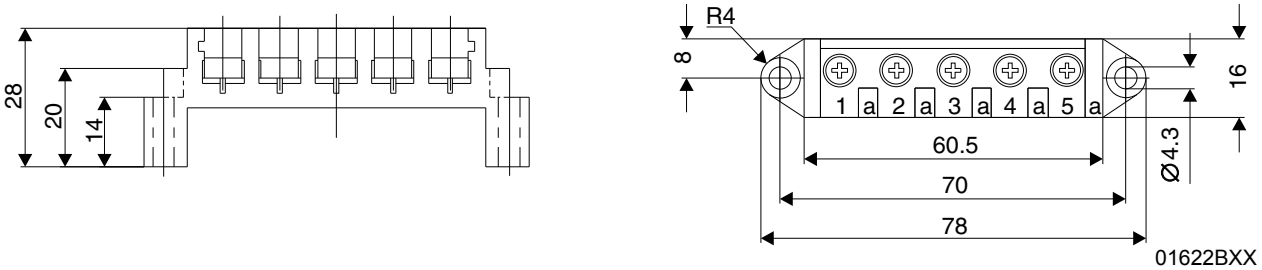

SR, UR

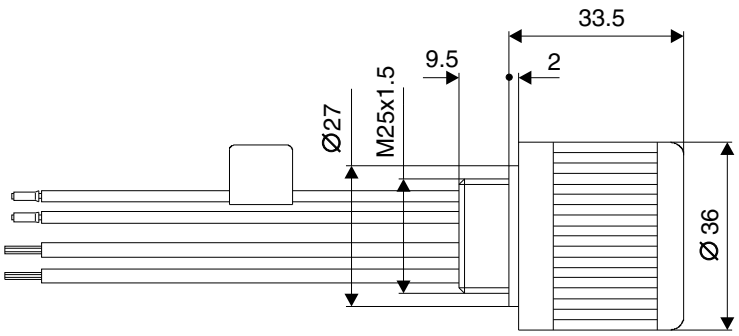

01644BXX

SR19

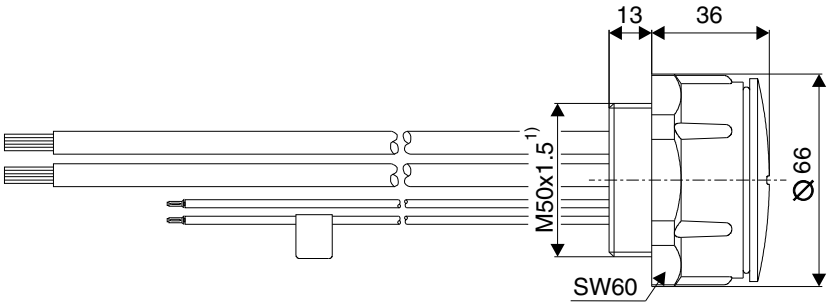

03332AXX

1) With reducing sleeve to M50x1.5

BMS, BME, BMH, BMP, BMK

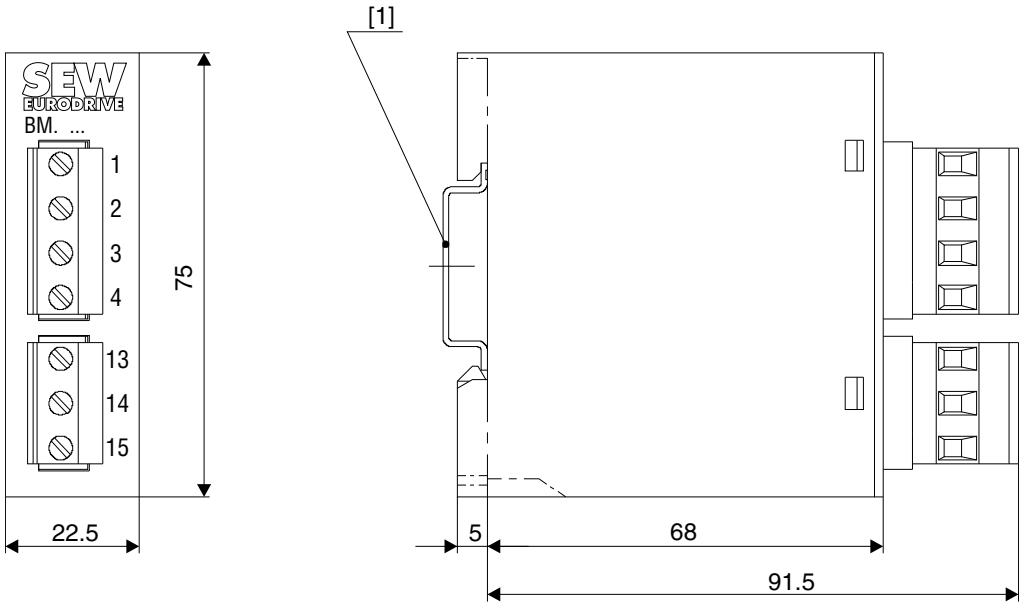

01645BXX

1) Support rail mounting DIN EN 60715