VIBRAČNÍ MOTOR OLI MVE 41/3E-MICRO-

1 PH - 2 poles - 3000 RPM - 230 V (1PH) - 50 Hz

Working moment (Kg*cm)	Unbalance (Kg*cm)	Centrifugal force (Kg)	Nominal voltage (V)	Input power (kW)	Current (A)	Power Factor	Ia/In
0,9	0,45	45	230 (1PH)	0,05	0,25	0,8	

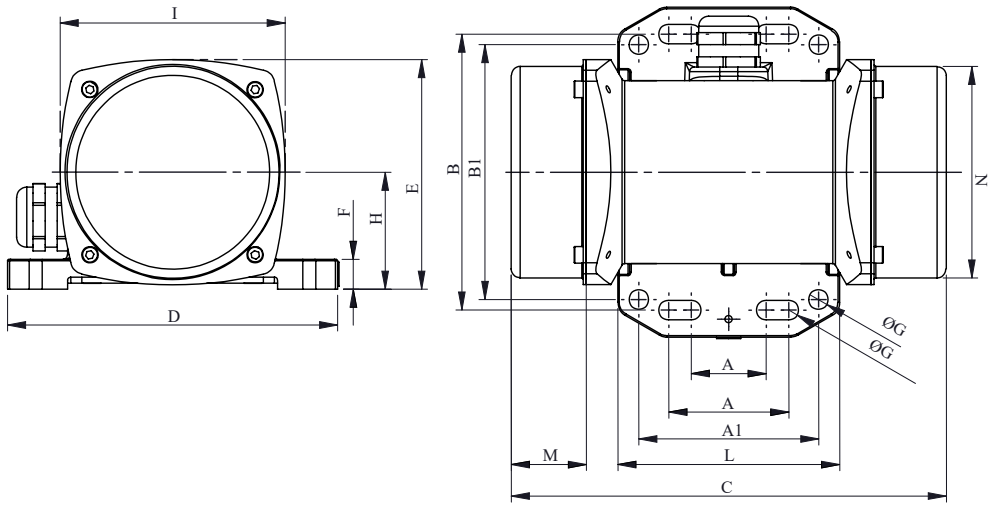

OVERALL DIMENSIONS (mm)															
Weight (Kg)	A	A1	B	B1	G	Holes number	C	D	E	F	H	I	L	M	N
2,4	25-40	60	92	85	6,5	4	161	110	76	10	39	75	74	33	70

TECHNICAL FEATURES						
Type of grease	Greased for life	Screw	Washer	Clamping torque (Nm)	Cable type	Cable gland
/	Yes	M6	6,5 x 10 mm	5	3Gx0.75 80°C	M16 80°C

BEARINGS				
Bearing model	Type	Life 100%	Life 80%	Life 50%
6200 2Z		>100000	/	/

CERTIFICATION	
ATEX II2 D Ex tb IIIC T135°C Db IP66 IECEx Ex tb IIIC T135°C Db IP66 CLASS II DIV.2 GROUP F,G T4 Ex tb IIIC Tx Db IP66 CONF.TO UL1004-3, UL1004-1,UL 60079-0,UL60079-31 CERT. CSA C22.2 No.100,CSA C22.2 No.77, CSA C22.2N.60079-0,CSA C22.2N. 60079-31 T.Amb -20/+40°C	