VIBRAČNÍ MOTOR OLI MVE 700/3E-40A0

3 PH - 2 poles - 3000 RPM - 220-240/380-415 V - 50 Hz

Working moment (Kg*cm)	Unbalance (Kg*cm)	Centrifugal force (Kg)	Nominal voltage (V)	Input power (kW)	Current (A)	Power factor	Ia/In
14,9	7,45	758	220-240/380-415	0,59	Δ 2,16 Y 1,25	0,68	4,5

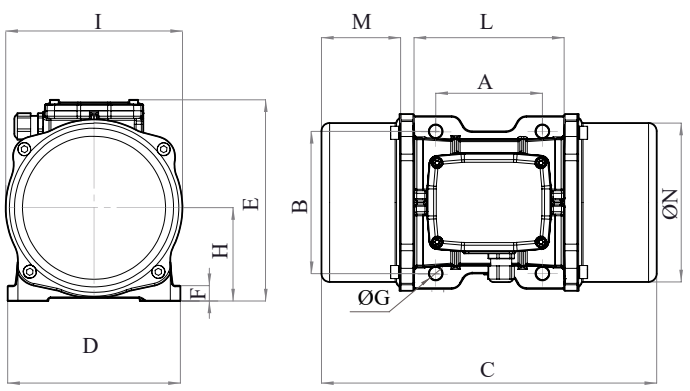

OVERALL DIMENSIONS (mm)													
Weight (Kg)	A	B	G	Holes number	C	D	E	F	H	I	L	M	N
16,5	105	140	13	4	330	170	196	20	92	169	166	78	158

TECHNICAL FEATURES						
Type of grease	Greased for life	Screw	Washer	Clamping torque (Nm)	Cable type	Cable gland
/	Yes	M12	13 x 24 mm	80	4G2.5 120°C	M20 120°C

BEARINGS				
Bearing model	Type	Life 100%	Life 80%	Life 50%
6306 2Z		1276	2492	10208

CERTIFICATION	
ATEX II2 D Ex tb IIIC Tx Db IP66 IECEx Ex tb IIIC Tx Db IP66 CLASS II DIV.2 GROUP F,G T4 Ex tb IIIC Tx Db IP66 [Tx Size Micro,10-30:100°C - Tx Size 40-91:135°C] CONF.TO UL1004-3, UL1004-1,UL 60079-0,UL60079-31 CERT. CSA C22.2 No.100,CSA C22.2 No.77, CSA C22.2N.60079-0,CSA C22.2N. 60079-31 T.Amb -20/+40°C	